Order No. MAC0801090C2

Service Manual

Air Conditioner

CS-E9HKEA CU-E9HKEA
CS-E12HKEA CU-E12HKEA

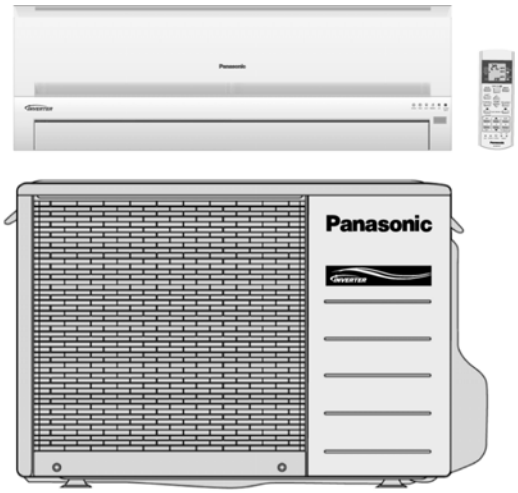

⚠ WARNING

This service information is designed for experienced repair technicians only and is not designed for use by the general public. It does not contain warnings or cautions to advise non-technical individuals of potential dangers in attempting to service a product. Products powered by electricity should be serviced or repaired only by experienced professional technicians. Any attempt to service or repair the product or products dealt with in this service information by anyone else could result in serious injury or death.

⚠ PRECAUTION OF LOW TEMPERATURE

In order to avoid frostbite, be assured of no refrigerant leakage during the installation or repairing of refrigeration circuit.

TABLE OF CONTENTS

PAGE

1 Safety Precaution ---------- 2
2 Specifications ---------- 4
2.1. CS-E9HKEA CU-E9HKEA ---------- 4
2.2. CS-E12HKEA CU-E12HKEA ---------- 6
3 Features ---------- 8
4 Location of Controls and Components ---------- 9
4.1. Product Overview ---------- 9
5 Dimensions ---------- 10
5.1. Indoor Unit ---------- 10
5.2. Outdoor Unit ---------- 11
6 Refrigeration Cycle Diagram ---------- 12
7 Block Diagram ---------- 13
8 Wiring Connection Diagram ---------- 14
8.1. Indoor Unit ---------- 14
8.2. Outdoor Unit ---------- 15
9 Electronic Circuit Diagram ---------- 16
9.1. Indoor Unit ---------- 16
9.2. Outdoor Unit ---------- 17
10 Printed Circuit Board ---------- 18
10.1. Indoor Unit ---------- 18
10.2. Outdoor Unit ---------- 20
11 Installation Instruction ---------- 21
11.1. Select The Best Location ---------- 21
11.2. Indoor/Outdoor Unit Installation Diagram ---------- 21
11.3. Indoor Unit ---------- 22
11.4. Outdoor Unit ---------- 25
12 Operation and Control ---------- 28
12.1. Basic Function ---------- 28
12.2. Protection Control ---------- 32
13 Servicing Mode ---------- 34
13.1. Auto Switch Operation ---------- 34
13.2. Indicator Panel ---------- 34

Panasonic®

© 2008 Panasonic HA Air-Conditioning (M) Sdn. Bhd. (11969-T). All rights reserved. Unauthorized copying and distribution is a violation of law.

14 Troubleshooting Guide ---------- **35**
14.1. Refrigeration Cycle System ---------- 35
14.2. Relationship Between The Condition Of The Air Conditioner And Pressure And Electric Current ---------- 36
14.3. Breakdown Self Diagnosis Function ---------- 36
14.4. Error Codes Table ---------- 37
15 Disassembly and Assembly Instructions ---------- **38**
15.1. Indoor Electronic Controller and Control Board ---------- 38
15.2. Indoor Cross Flow Fan and Fan Motor ---------- 40
15.3. Outdoor Electronic Controller Removal Procedure ---------- 42
16 Technical Data ---------- **43**
16.1. Operation Characteristics ---------- 43
16.2. Sensible Capacity Chart ---------- 51
17 Exploded View and Replacement Parts List ---------- **52**
17.1. Indoor Unit ---------- 52
17.2. Outdoor Unit ---------- 55

1 Safety Precaution

- Read the following “SAFETY PRECAUTIONS” carefully before perform any servicing.
- Electrical work must be installed or serviced by a licensed electrician. Be sure to use the correct rating of the power plug and main circuit for the model installed.
- The caution items stated here must be followed because these important contents are related to safety. The meaning of each indication used is as below. Incorrect installation or servicing due to ignoring of the instruction will cause harm or damage, and the seriousness is classified by the following indications.

⚠ **WARNING**	This indication shows the possibility of causing death or serious injury.

⚠ **CAUTION**	This indication shows the possibility of causing injury or damage to properties.

- The items to be followed are classified by the symbols:

⃠	This symbol denotes item that is PROHIBITTED from doing.

- Carry out test running to confirm that no abnormality occurs after the servicing. Then, explain to user the operation, care and maintenance as stated in instructions. Please remind the customer to keep the operating instructions for future reference.

⚠ **WARNING**	
1. Engage dealer or specialist for installation and servicing. If installation or servicing done by the user is defective, it will cause water leakage, electrical shock or fire.	
2. Install according to this installation instruction strictly. If installation is defective, it will cause water leakage, electrical shock or fire.	
3. Use the attached accessories parts and specified parts for installation and servicing. Otherwise, it will cause the set to fall, water leakage, fire or electrical shock.	
4. Install at a strong and firm location which is able to withstand the set's weight. If the strength is not enough or installation is not properly done, the set will drop and cause injury.	
5. For electrical work, follow the local national wiring standard, regulation and the installation instruction. An independent circuit and single outlet must be used. If electrical circuit capacity is not enough or defect found in electrical work, it will cause electrical shock or fire.	
6. Use the specified cable and connect tightly for indoor/outdoor connection. Connect tightly and clamp the cable so that no external force will be acted on the terminal. If connection or fixing is not perfect, it will cause heat-up or fire at the connection.	
7. Wire routing must be properly arranged so that control board cover is fixed properly. If control board cover is not fixed perfectly, it will cause heat-up at connection point of terminal, fire or electrical shock.	
8. When connecting the piping, do not allow air or any substances other than the specified refrigerant to enter the refrigeration cycle. Otherwise, this may lower the capacity, cause abnormally high pressure in the refrigeration cycle, and possibly result in explosion and injury.	⃠
9. Thickness of copper pipes used must be more than 0.6 mm. Never use copper pipes thinner than 0.6 mm.	⃠
10. It is desirable that the amount of residual oil is less than 40 mg/10 m.	⃠
11. Do not modify the length of the power supply cord or use of the extension cord, and do not share the single outlet with other electrical appliances. Otherwise, it will cause fire or electrical shock.	⃠

⚠ CAUTION

1. The equipment must be earthed. It may cause electrical shock if grounding is not perfect.
2. Do not install the unit at place where leakage of flammable gas may occur. In case gas leaks and accumulates at surrounding of the unit, it may cause fire.
3. Carry out drainage piping as mentioned in installation instructions. If drainage is not perfect, water may enter the room and damage the furniture.
4. Pb free solder has a higher melting point than standard solder; typically the melting point is 50 - 70°F (30 - 40°C) higher. Please use a high temperature soldering iron. In case of the soldering iron with temperature control, please set it to 700 ± 20°F (370 ± 10°C).Pb free solder will tend to splash when heated too high (about 1100°F/600°C).
5. Tighten the flare nut with torque wrench according to specified method. If the flare nut is over-tightened, after a long period, the flare may break and cause refrigerant gas leakage.
6. Do not touch outdoor unit air inlet and aluminium fin. It may cause injury.

ATTENTION

1. Selection of the installation location. Select an installation location which is rigid and strong enough to support or hold the unit, and select a location for easy maintenance.
2. Power supply connection to the conditioner. Connect the power supply cord of the air conditioner to the mains using one of the following methods.
   Power supply point shall be the place where there is ease for access for the power disconnection in case of emergency.
   In some countries, permanent connection of this room air conditioner to the power supply is prohibited.
   1. Power supply connection to the receptacle using a power plug. Use an approved power plug with earth pin for the connection to the socket.
   2. Power supply connection to a circuit breaker for the permanent connection. Use an approved circuit breaker for the permanent connection. It must be a double pole switch with a minimum 3.5 mm contact gap.
3. Do not release refrigerant during piping work for installation, servicing, reinstallation and during repairing a refrigeration parts. Take care of the liquid refrigerant, it may cause frostbite.
4. Installation work. It may need two people to carry out the installation work.
5. Do not install this appliance in a laundry room or other location where water may drip from the ceiling, etc.

2 Specifications

2.1. CS-E9HKEA CU-E9HKEA

ITEM			UNIT	INDOOR UNIT	OUTDOOR UNIT
Performance Test Condition				EUROVENT	
COOLING	Capacity		kW	2.60 (0.60 ~ 3.00)	
			kCal/h	2240 (520 ~ 2580)	
	EER		W/W	4.41 (5.00 ~ 4.00)	
			kCal/hW	3.80 (4.33 ~ 3.44)	
	Noise Level		dB (A)	High 39, Low 26, Q-Lo 23	High 46
			Power level dB	50	59
HEATING	Capacity		kW	3.60 (0.60 ~ 5.40)	
			kCal/h	3100 (520 ~ 4640)	
	COP		W/W	4.26 (5.22 ~ 3.97)	
			kCal/hW	3.67 (4.52 ~ 3.41)	
	Noise Level		dB (A)	High 40, Low 27, Q-Lo 24	High 47
			Power level dB	51	60
Moisture Removal			l/h	1.6	
			pt/h	3.4	
Air Volume	Lo		m^3/min (ft^3/min)	Cooling; 4.9 (174) Heating; 5.4 (192)	—
	Me		m^3/min (ft^3/min)	Cooling; 7.1 (252) Heating; 8.0 (283)	—
	Hi		m^3/min (ft^3/min)	Cooling; 9.6 (339) Heating; 10.5 (370)	Cooling; 29.8 (1050)
	SHi		m^3/min (ft^3/min)	Cooling; 9.9 (350) Heating; 10.9 (384)	—
Refrigeration Control Device				—	Exp. Valve
Refrigeration Oil			cm^3	—	RB68A or Freol Alpha68M (400)
Refrigerant (R410A)			g (oz)	—	930 (32.8)
Dimension	Height		mm (inch)	280 (11-1/32)	540 (21-9/32)
	Width		mm (inch)	799 (31-15/32)	780 (30-23/32)
	Depth		mm (inch)	183 (7-7/32)	289 (11-13/32)
Net Weight			kg (lbs)	9 (20)	35 (77)
Pipe Diameter	Gas		mm (inch)	9.52 (3/8)	
	Liquid		mm (inch)	6.35 (1/4)	
Standard Length			m (ft)	7.5 (24.6)	
Pipe Length Range			m (ft)	3 (9.8) ~ 15 (49.2)	
Height Difference			m (ft)	5 (16.4)	
Additional Gas Amount			g/m (oz/ft)	20 (0.2)	
Refrigeration Charge Less			m (ft)	7.5 (24.6)	
Drain Hose	Inner Diameter		mm	16	—
	Length		mm	650	—
Compressor	Type			—	Hermetic Motor
	Motor Type			—	Brushless (4-pole)
	Rated Output		W	—	750
Fan	Type			Cross-Flow Fan	Propeller Fan
	Material			ASG20K1	PP
	Motor Type			Transistor (8-pole)	Induction (8-pole)
	Output Power		W	30	40
	Fan Speed	Lo (Cool/Heat)	rpm	820 / 880	—
		Me (Cool/Heat)	rpm	1050 / 1140	—
		Hi (Cool/Heat)	rpm	1280 / 1400	800 / 790
		SHi (Cool/Heat)	rpm	1320 / 1440	—

ITEM		UNIT	INDOOR UNIT	OUTDOOR UNIT
Heat Exchanger	Fin Material		Aluminium (Pre Coat)	Aluminium
	Fin Type		Slit Fin	Corrugated Fin
	Row x Stage x FPI		2 x 15 x 21	2 x 24 x 17
	Size (W x H x L)	mm	610 x 315 x 25.4	36.4 x 504 x 713 684
Air Filter	Material		P.P. Honey Comb	—
	Type		One-Touch	—

1. Cooling capacities are based on indoor temperature of 27°C D.B. (80.6°F D.B.), 19.0°C W.B. (66.2°F W.B.) and outdoor air temperature of 35°C D.B. (95°F D.B.), 24°C W.B. (75.2°F W.B.)
2. Heating capacities are based on indoor temperature of 20°C D.B. (68°F D.B.) and outdoor air temperature of 7°C D.B. (44.6°F D.B.), 6°C W.B. (42.8°F W.B.)

Item		Unit	
Power Source (Phase, Voltage, Cycle)		ø	Single
		V	230
		Hz	50
Input Power		W	Cooling; 590 (120 ~ 750) Heating; 845 (115 ~ 1360)
Starting Current		A	4.0
Running Current		A	Cooling; 2.9 Heating; 4.0
Power Factor		%	Cooling; 88 Heating; 92
Power factor means total figure of compressor, indoor fan motor and outdoor fan motor.			
*Maximum over current protection		A	6.3
Power Cord	Number of core		3 (1.5 mm^2)
	Length	m	1.8
Thermostat			Electronic Control
Protection Device			Electronic Control

Note

- Specifications are subject to change without notice for further improvement.

2.2. CS-E12HKEA CU-E12HKEA

ITEM			UNIT	INDOOR UNIT	OUTDOOR UNIT
Performance Test Condition				EUROVENT	
COOLING	Capacity		kW	3.50 (0.60 ~ 4.00)	
			kCal/h	3010 (520 ~ 3440)	
	EER		W/W	3.80 (5.00 ~ 3.39)	
			kCal/hW	3.27 (4.33 ~ 2.92)	
	Noise Level		dB (A)	High 42, Low 29, Q-Lo 26	High 48
			Power level dB	53	61
HEATING	Capacity		kW	4.80 (0.60 ~ 6.60)	
			kCal/h	4130 (520 ~ 5680)	
	COP		W/W	3.81 (5.22 ~ 3.57)	
			kCal/hW	3.28 (4.52 ~ 3.07)	
	Noise Level		dB (A)	High 42, Low 33, Q-Lo 30	High 50
			Power level dB	53	63
Moisture Removal			l/h	2.0	
			pt/h	4.2	
Air Volume	Lo		m^3/min (ft^3/min)	Cooling; 5.8 (204) Heating; 7.4 (261)	—
	Me		m^3/min (ft^3/min)	Cooling; 8.1 (286) Heating; 9.3 (328)	—
	Hi		m^3/min (ft^3/min)	Cooling; 10.7 (377) Heating; 11.2 (395)	Cooling; 31.0 (1090)
	SHi		m^3/min (ft^3/min)	Cooling; 10.8 (381) Heating; 11.59 (409)	—
Refrigeration Control Device				—	Exp. Valve
Refrigeration Oil			cm^3	—	RB68A or Freol Alpha68M (400)
Refrigerant (R410A)			g (oz)	—	970 (34.2)
Dimension	Height		mm (inch)	280 (11-1/32)	540 (21-9/32)
	Width		mm (inch)	799 (31-15/32)	780 (30-23/32)
	Depth		mm (inch)	183 (7-7/32)	289 (11-13/32)
Net Weight			kg (lbs)	9 (20)	35 (77)
Pipe Diameter	Gas		mm (inch)	12.7 (1/2)	
	Liquid		mm (inch)	6.35 (1/4)	
Standard Length			m (ft)	7.5 (24.6)	
Pipe Length Range			m (ft)	3 (9.8) ~ 15 (49.2)	
Height Difference			m (ft)	5 (16.4)	
Additional Gas Amount			g/m (oz/ft)	20 (0.2)	
Refrigeration Charge Less			m (ft)	7.5 (24.6)	
Drain Hose	Inner Diameter		mm	16	—
	Length		mm	650	—
Compressor	Type			—	Hermetic Motor
	Motor Type			—	Brushless (4-pole)
	Rated Output		W	—	750
Fan	Type			Cross-Flow Fan	Propeller Fan
	Material			ASG20K1	PP
	Motor Type			Transistor (8-pole)	Induction (8-pole)
	Output Power		W	30	40
	Fan Speed	Lo (Cool/Heat)	rpm	910 / 1080	—
		Me (Cool/Heat)	rpm	1165 / 1290	—
		Hi (Cool/Heat)	rpm	1420 / 1500	840 / 820
		SHi (Cool/Heat)	rpm	1460 / 1540	—

ITEM		UNIT	INDOOR UNIT	OUTDOOR UNIT
Heat Exchanger	Fin Material		Aluminium (Pre Coat)	Aluminium
	Fin Type		Slit Fin	Corrugated Fin
	Row x Stage x FPI		2 x 15 x 21	2 x 24 x 17
	Size (W x H x L)	mm	610 x 315 x 25.4	36.4 x 504 x 713 684
Air Filter	Material		P.P. Honey Comb	—
	Type		One-Touch	—

1. Cooling capacities are based on indoor temperature of 27°C D.B. (80.6°F D.B.), 19.0°C W.B. (66.2°F W.B.) and outdoor air temperature of 35°C D.B. (95°F D.B.), 24°C W.B. (75.2°F W.B.)
2. Heating capacities are based on indoor temperature of 20°C D.B. (68°F D.B.) and outdoor air temperature of 7°C D.B. (44.6°F D.B.), 6°C W.B. (42.8°F W.B.)

Item		Unit	
Power Source (Phase, Voltage, Cycle)		ø	Single
		V	230
		Hz	50
Input Power		W	Cooling; 920 (120 ~ 1180) Heating; 1260 (115 ~ 1850)
Starting Current		A	5.8
Running Current		A	Cooling; 4.3 Heating; 5.8
Power Factor		%	Cooling; 93 Heating; 94
Power factor means total figure of compressor, indoor fan motor and outdoor fan motor.			
*Maximum over current protection		A	8.4
Power Cord	Number of core		3 (1.5 mm^2)
	Length	m	1.8
Thermostat			Electronic Control
Protection Device			Electronic Control

Note

- Specifications are subject to change without notice for further improvement.

3 Features

- **Product**
  - Four modes of operation selection
  - Powerful mode to reach the desired room temperature quickly with full power and a strong airflow
  - Quiet mode to provide a quiet environment by reducing the indoor unit operating airflow sound
  - 24-hour ON Timer and OFF Timer setting
  - Air swing manual and automatic adjusted by Remote Control for vertical airflow and the horizontal airflow direction louvers can be adjusted manually by hand
  - Super Alleru-Buster Filter prevent the growth of bacteria, viruses trapped, trap dust, tobacco smoke and tiny particles.
  - Long installation piping up to 15 meter.

- **Operation Condition**
  - Use this air conditioner under the following temperature range.

Temperature (°C)		Indoor		Outdoor	
		*DBT	*WBT	*DBT	*WBT
COOLING	Maximum	32	23	43	26
	Minimum	16	11	-15	-
HEATING	Maximum	30	-	24	18
	Minimum	16	-	-10	-

*DBT: Dry bulb temperature
*WBT: Wet bulb temperature

  - This unit is still able to operate as a cooler with outdoor temperature as low as -15°C in a non-living room, such as a computer room, with a room temperature of 16°C or above, and room humidity up to 80%.
  - During cooling operation, when the outdoor temperature drops below -15°C, compressor will be cut off and resume operation again once the temperature rises more than -15°C.

- **Serviceability Improvement**
  - Removable and washable Front Panel
  - Breakdown Self Diagnosis function

- **Environmental Protection**
  - Non-ozone depletion substances refrigerant (R410A)

- **Operation Improvement**
  - Random auto restart control after power failure for safety restart operation
  - Advanced inverter technology provides outstanding energy efficiency and powerful, flexible, comfortable operation

4 Location of Controls and Components

4.1. Product Overview

4.1.1. Indoor Unit

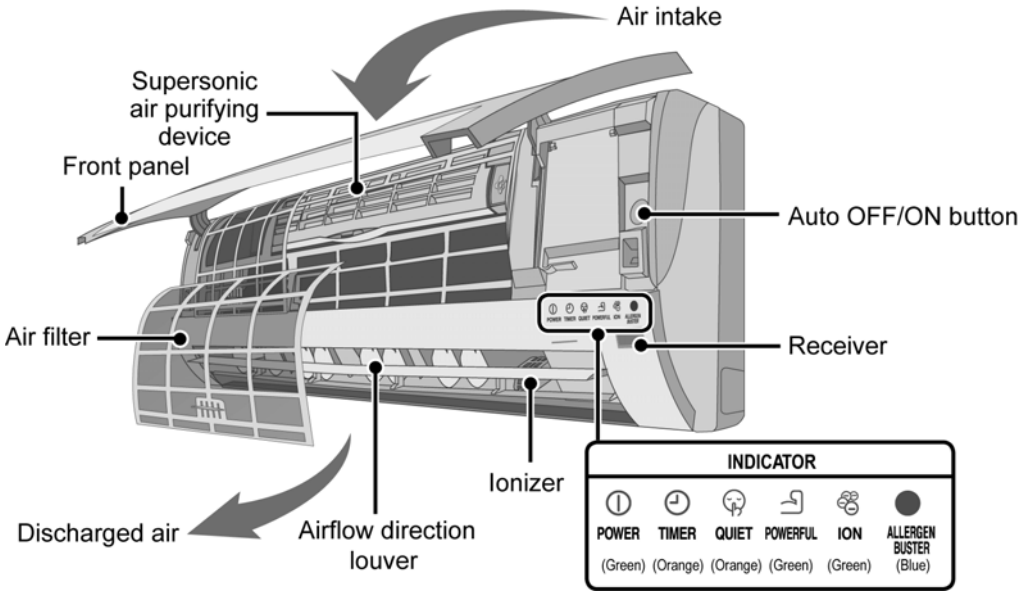

4.1.2. Outdoor Unit

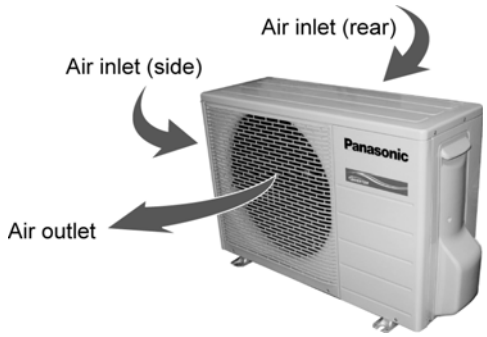

4.1.3. Remote Control

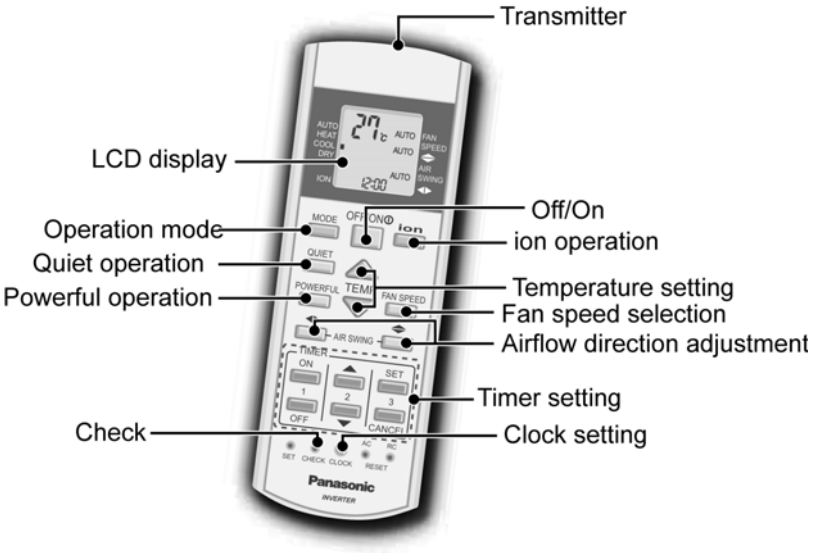

5 Dimensions

5.1. Indoor Unit

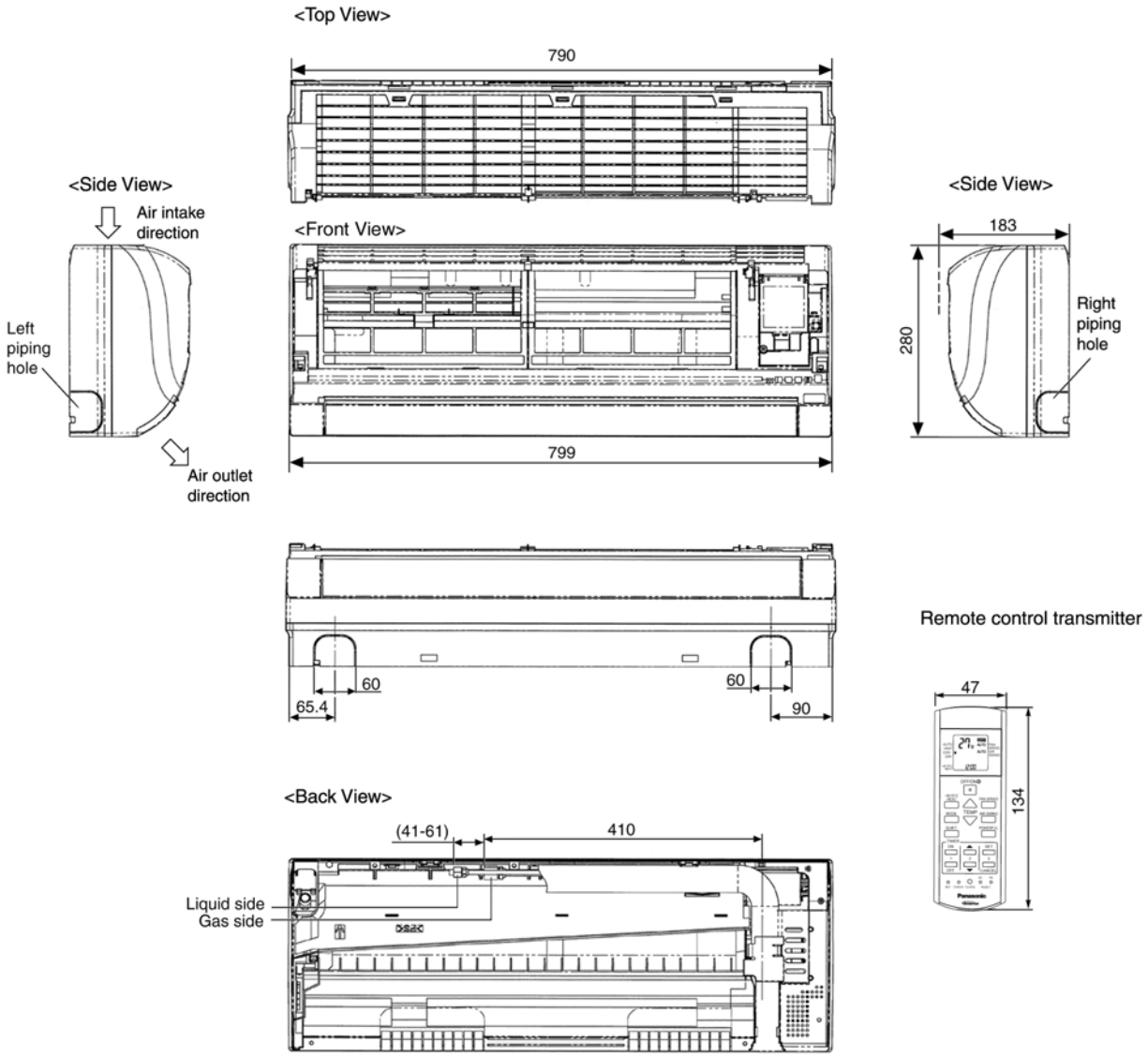

Relative position between the indoor unit and the installation plate <Front View>

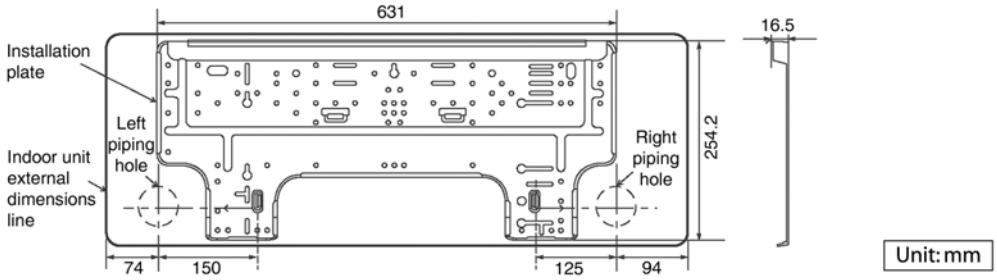

5.2. Outdoor Unit

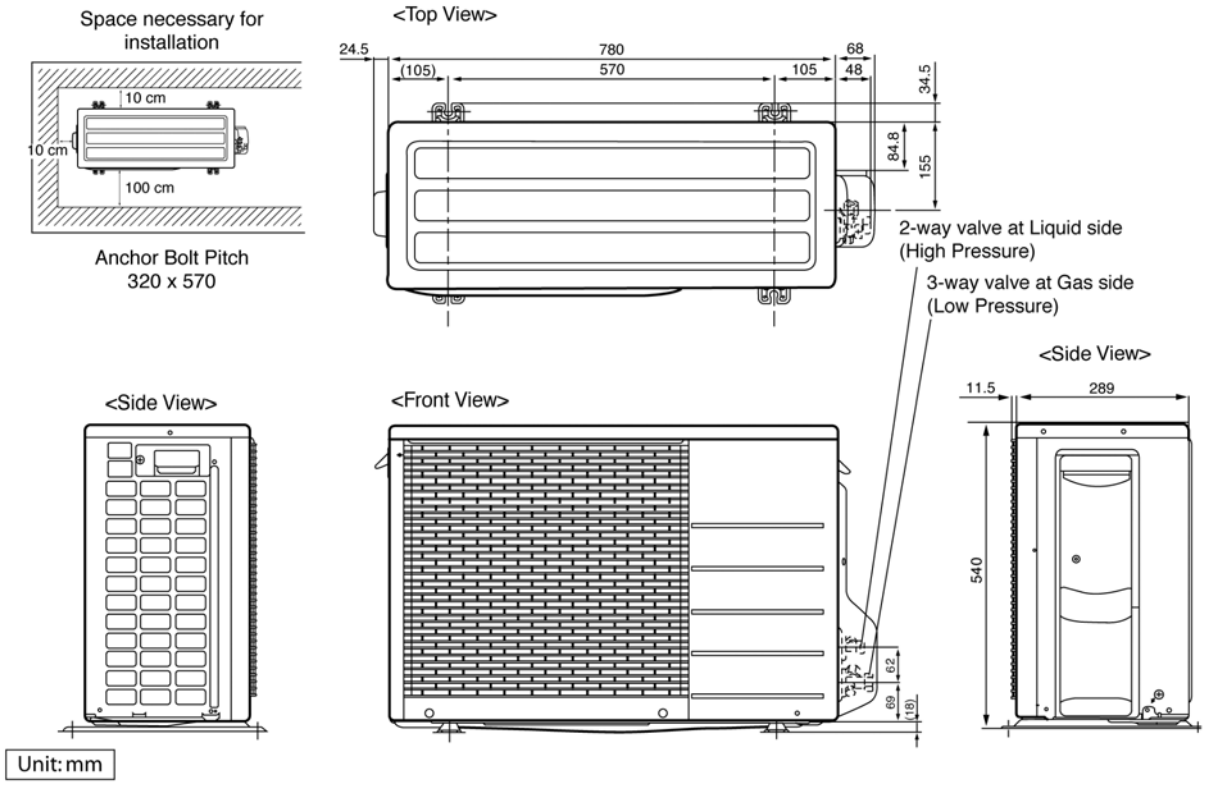

6 Refrigeration Cycle Diagram

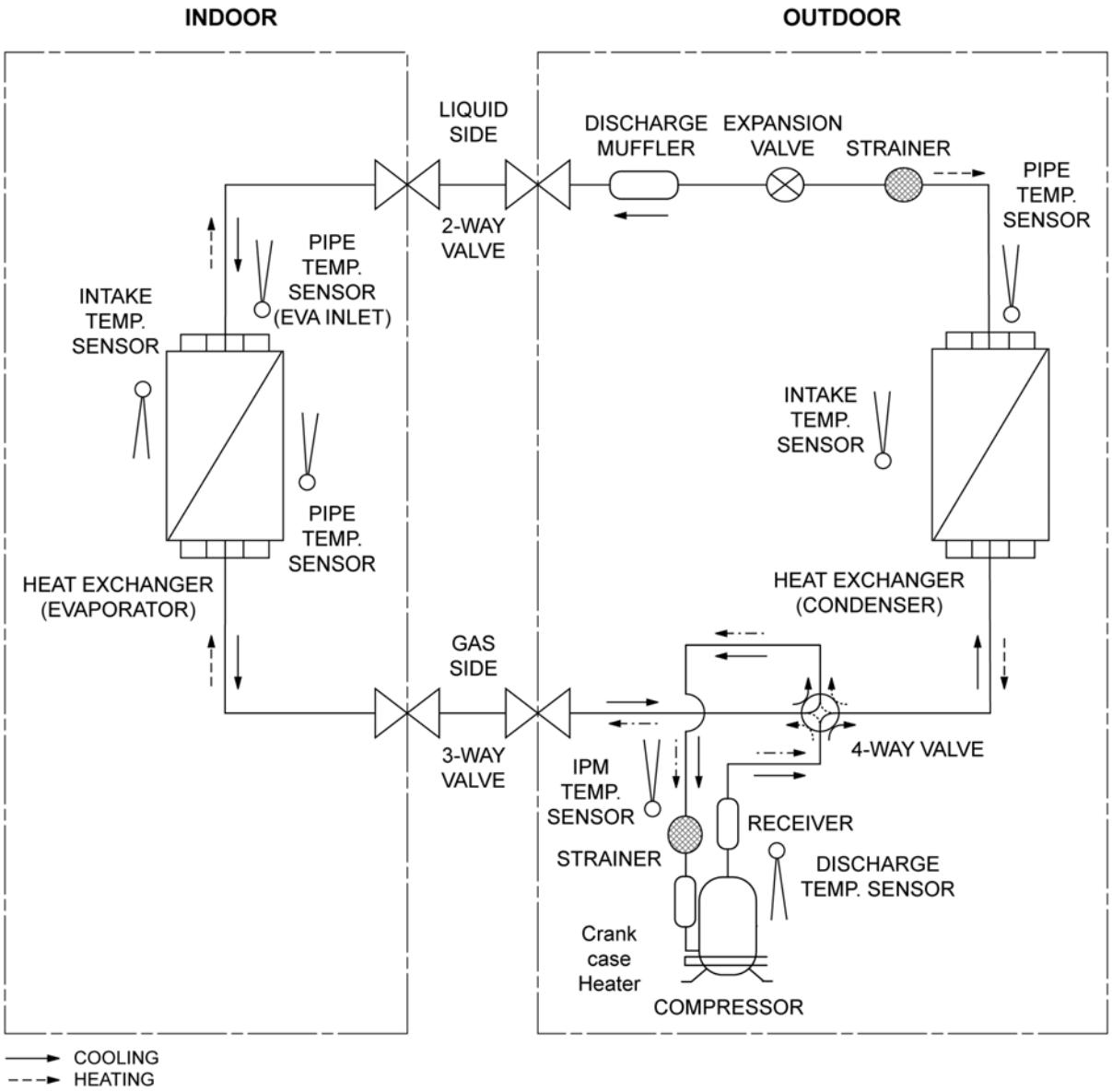

Model	Piping size		Rated Length (m)	Common Length (m)	Max. Elevation (m)	Max. Piping Length (m)	Additional Refrigerant (g/m)
	Gas	Liquid					
E9HKEA	3/8”	1/4”	7.5	7.5	5	15	20
E12HKEA	1/2”	1/4”	7.5	7.5	5	15	20

※ If piping length is over common length, additional refrigerant should be added as shown in the table.

7 Block Diagram

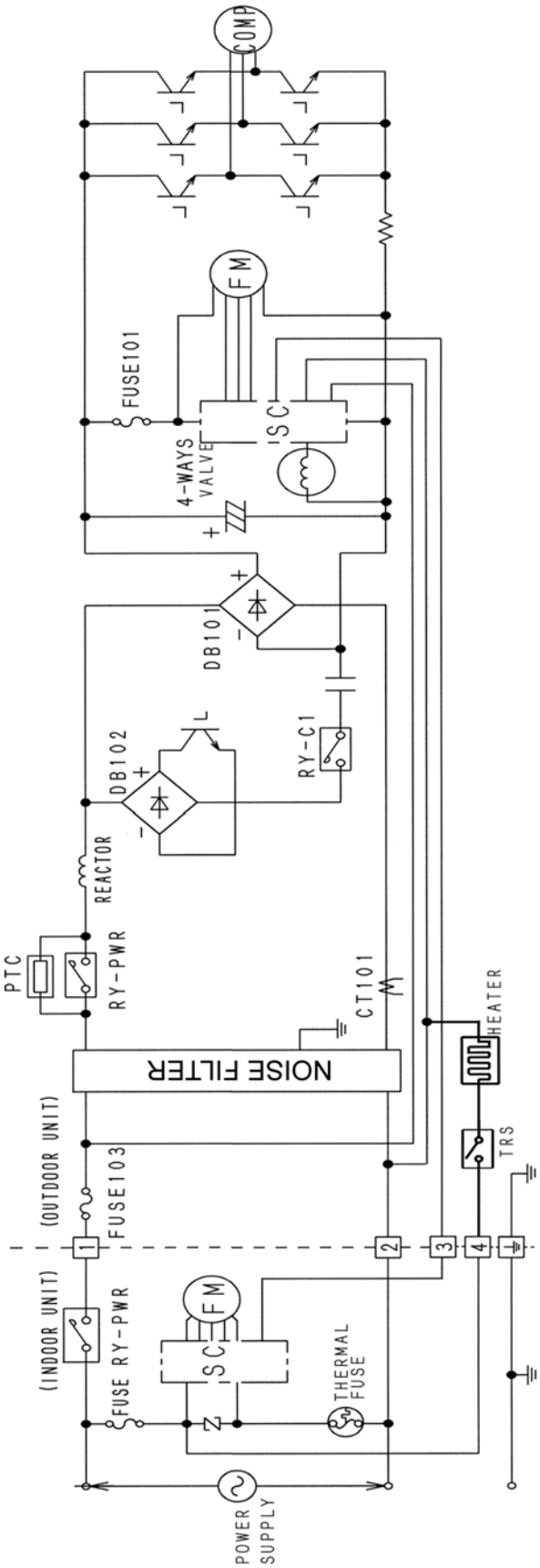

8 Wiring Connection Diagram

8.1. Indoor Unit

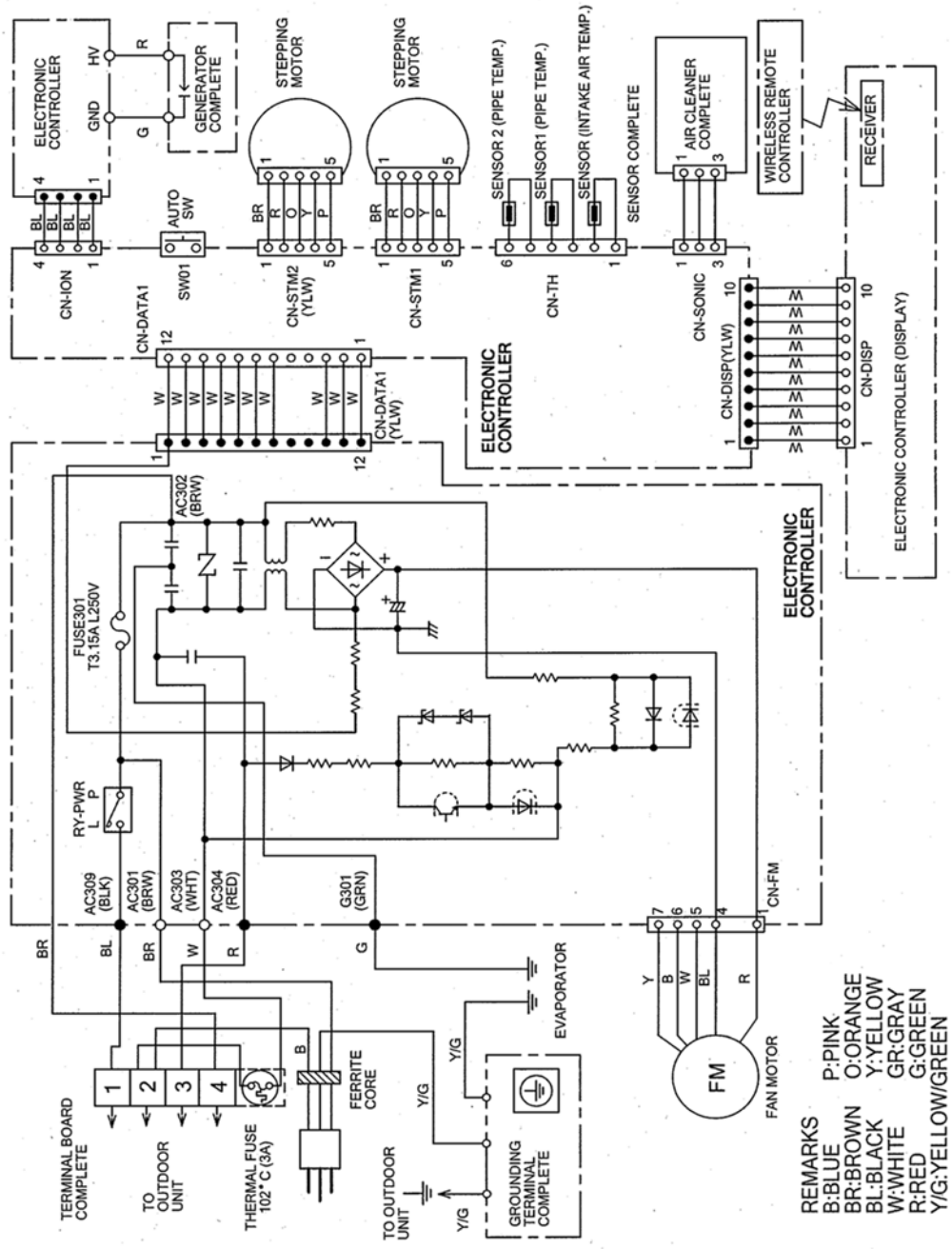

8.2. Outdoor Unit

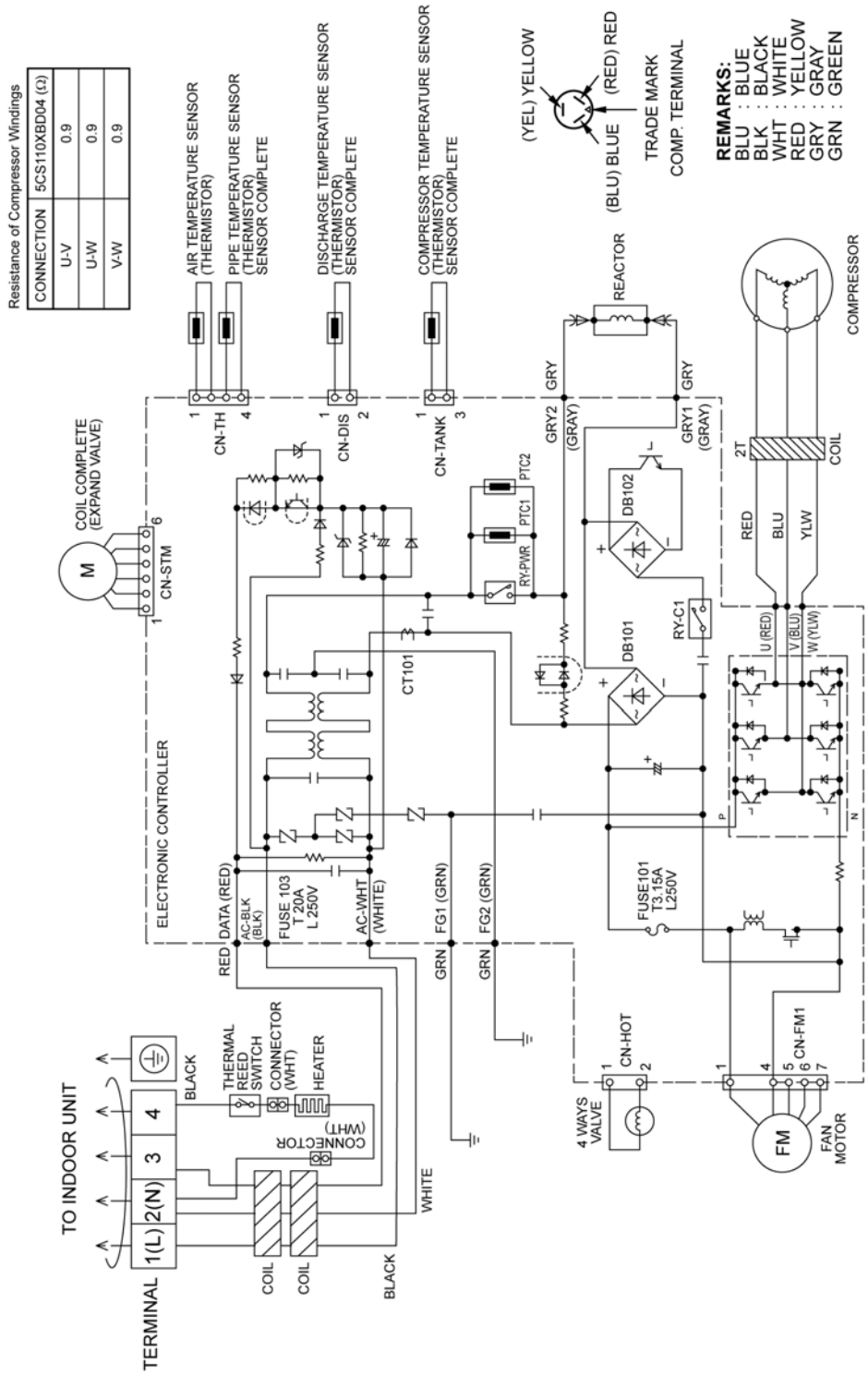

9 Electronic Circuit Diagram

9.1. Indoor Unit

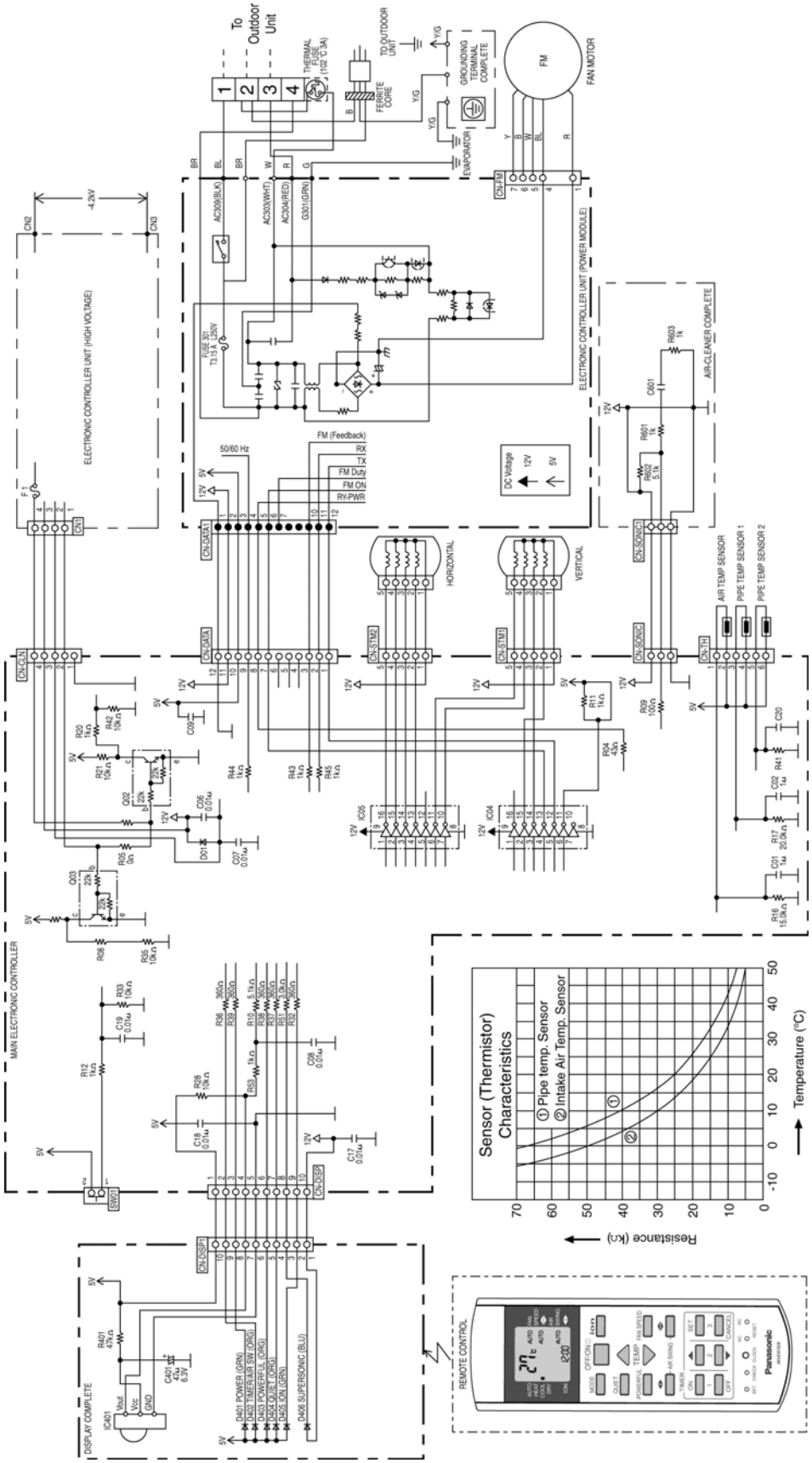

9.2. Outdoor Unit

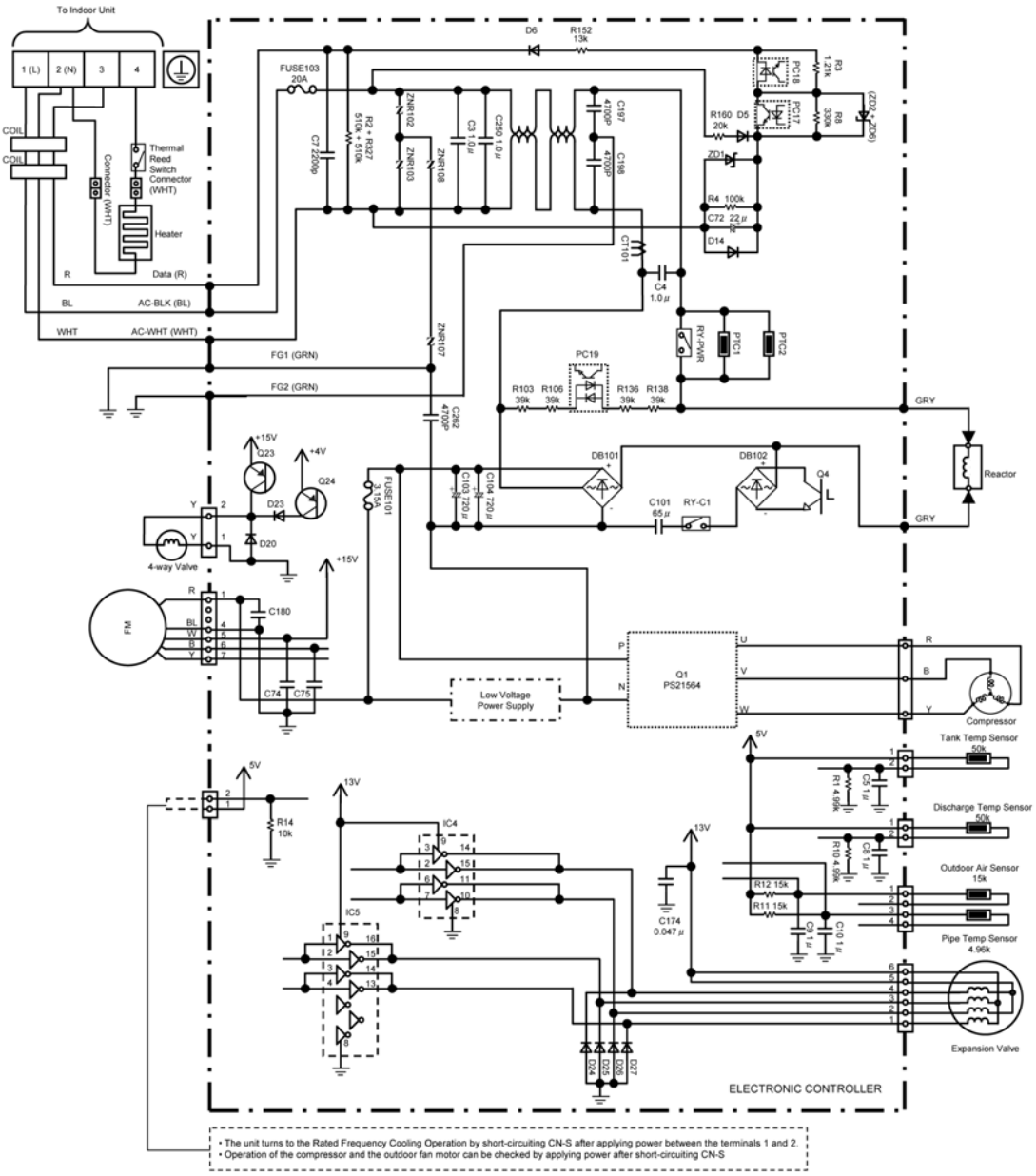

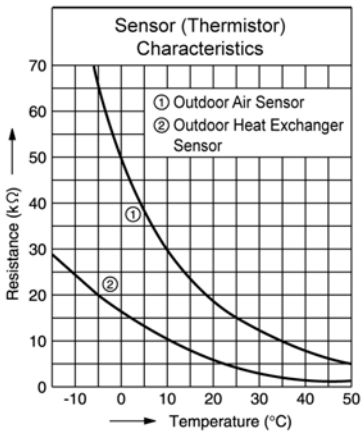

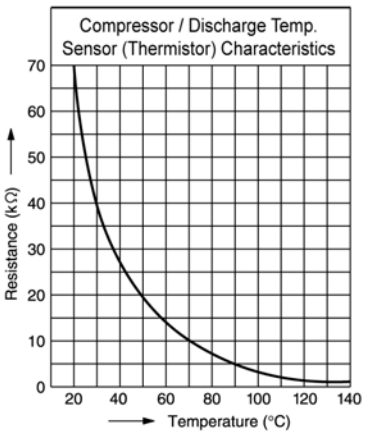

10 Printed Circuit Board

10.1. Indoor Unit

10.1.1. Main Printed Circuit Board

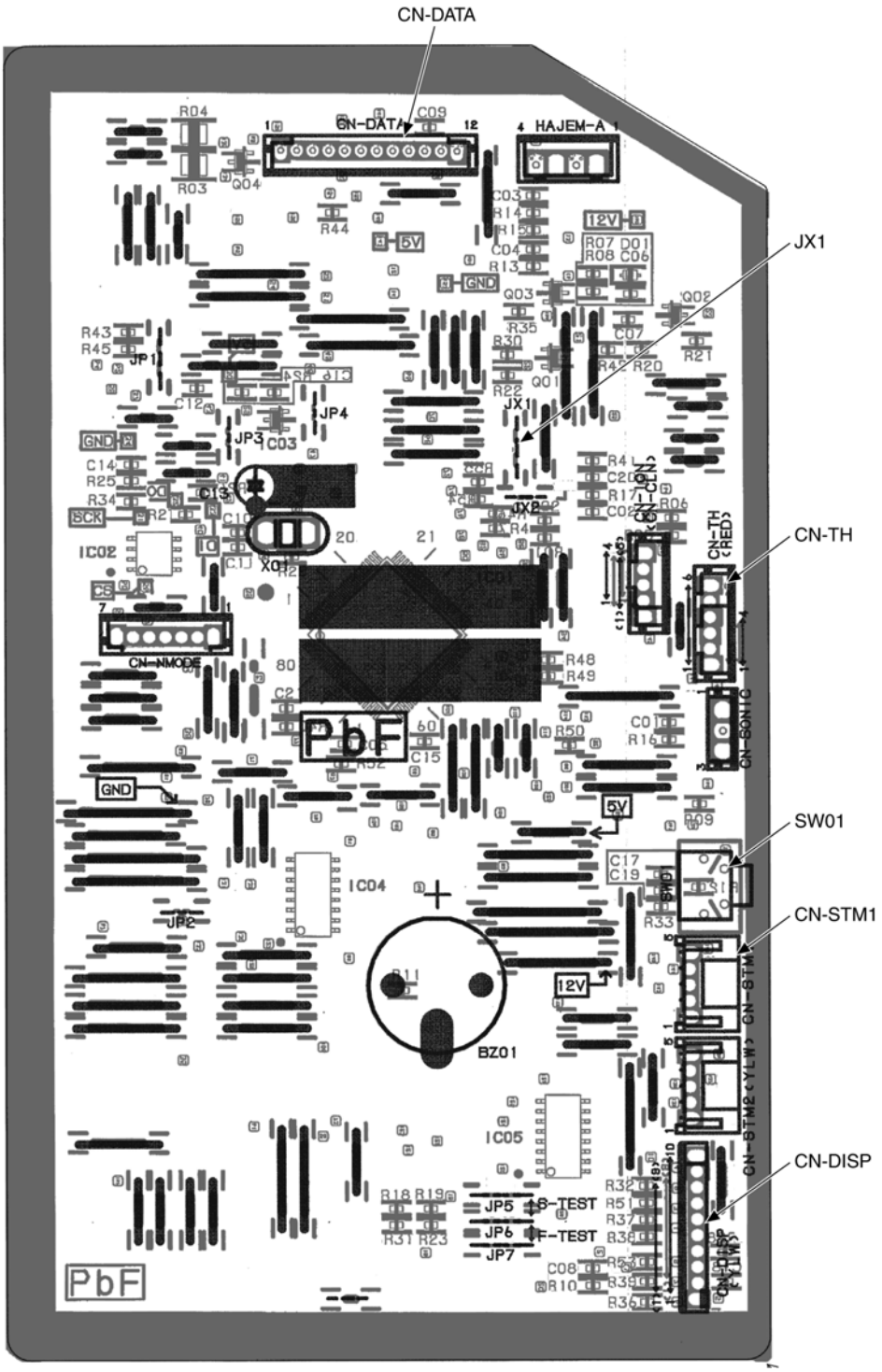

10.1.2. Power Printed Circuit Board

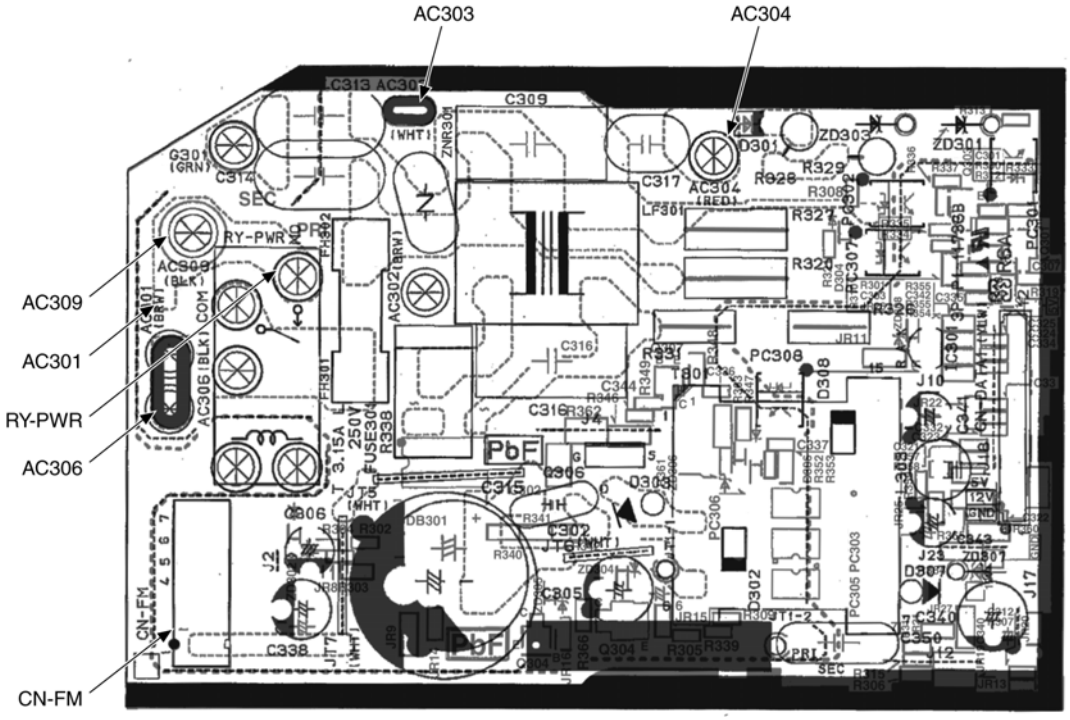

10.1.3. Indicator Panel

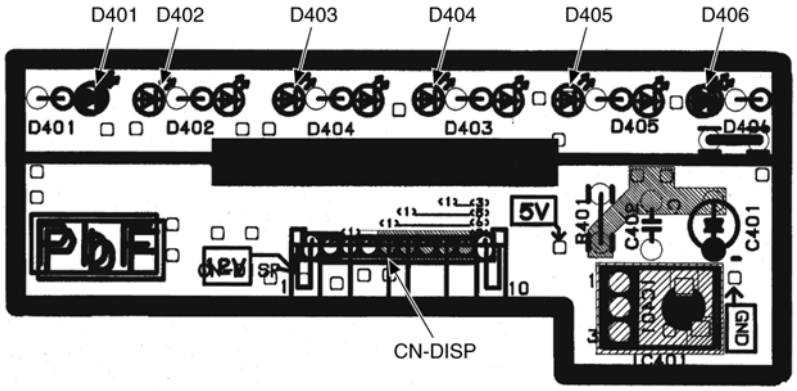

10.2. Outdoor Unit

10.2.1. Main Printed Circuit Board

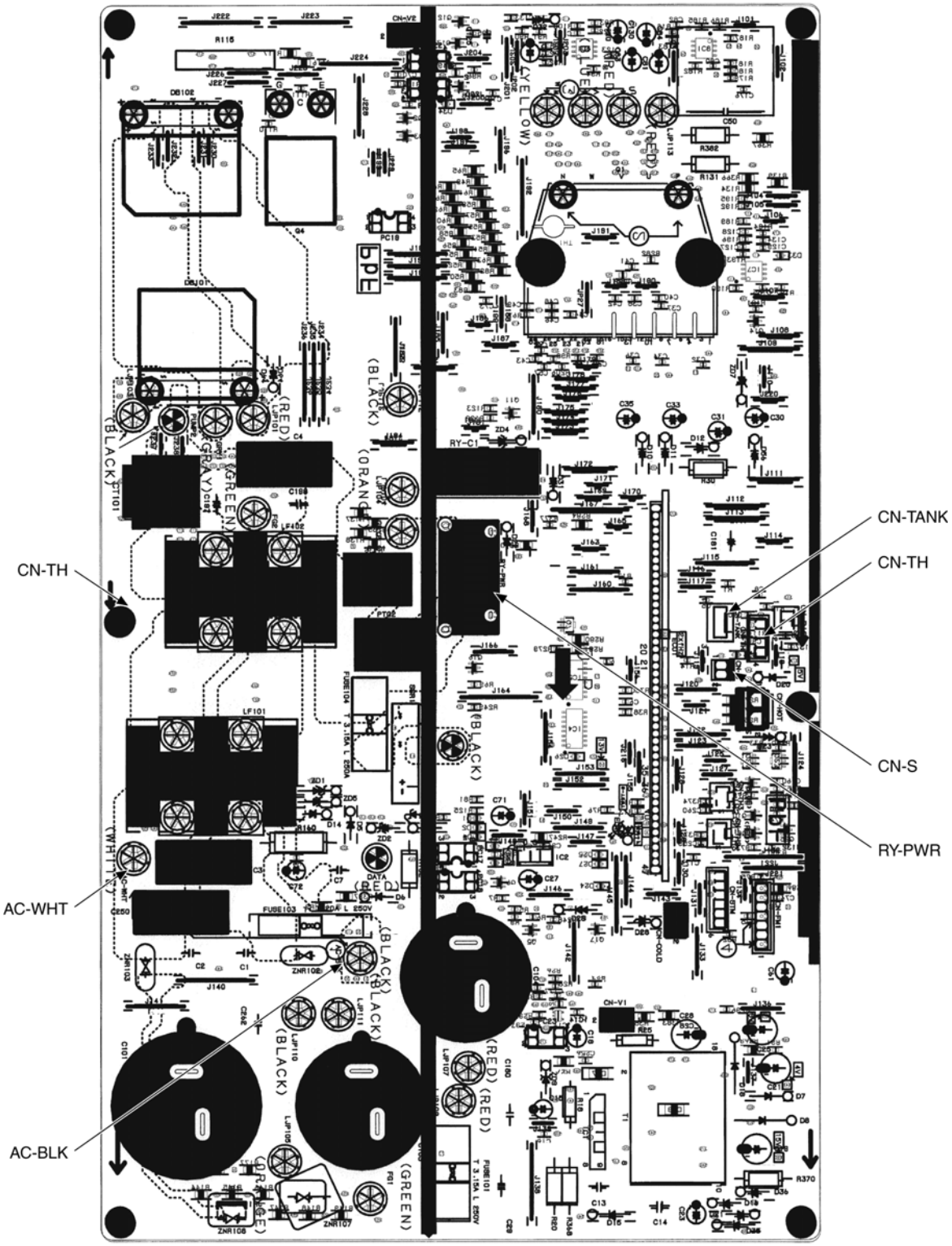

11 Installation Instruction

11.1. Select The Best Location

INDOOR UNIT

- Do not install the unit in excessive oil fume area such as kitchen, workshop and etc.
- There should not be any heat source or steam near the unit.
- There should not be any obstacles blocking the air circulation.
- A place where air circulation in the room is good.
- A place where drainage can be easily done.
- A place where noise prevention is taken into consideration.
- Do not install the unit near the door way.
- Ensure the spaces indicated by arrows from the wall, ceiling, fence or other obstacles.
- Recommended installation height for indoor unit shall be at least 2.5 m.

OUTDOOR UNIT

- If an awning is built over the unit to prevent direct sunlight or rain, be careful that heat radiation from the condenser is not obstructed.
- There should not be any animal or plant which could be affected by hot air discharged.
- Keep the spaces indicated by arrows from wall, ceiling, fence or other obstacles.
- Do not place any obstacles which may cause a short circuit of the discharged air.
- If piping length is over the rated length, additional refrigerant should be added as shown in the table.

Model	Piping size		Rated Length (m)	Max. Elevation (m)	Min. Piping Length (m)	Max. Piping Length (m)	Additional Refrigerant (g/m)
	Gas	Liquid					
E9HKEA	3/8”	1/4”	7.5	5	3	15	20
E12HKEA	1/2”	1/4”	7.5	5	3	15	20

Example: For E9HKEA

If the unit is installed at 10 m distance, the quantity of additional refrigerant should be 50g..... (10 - 7.5) m x 20 g/m = 50 g

11.2. Indoor/Outdoor Unit Installation Diagram

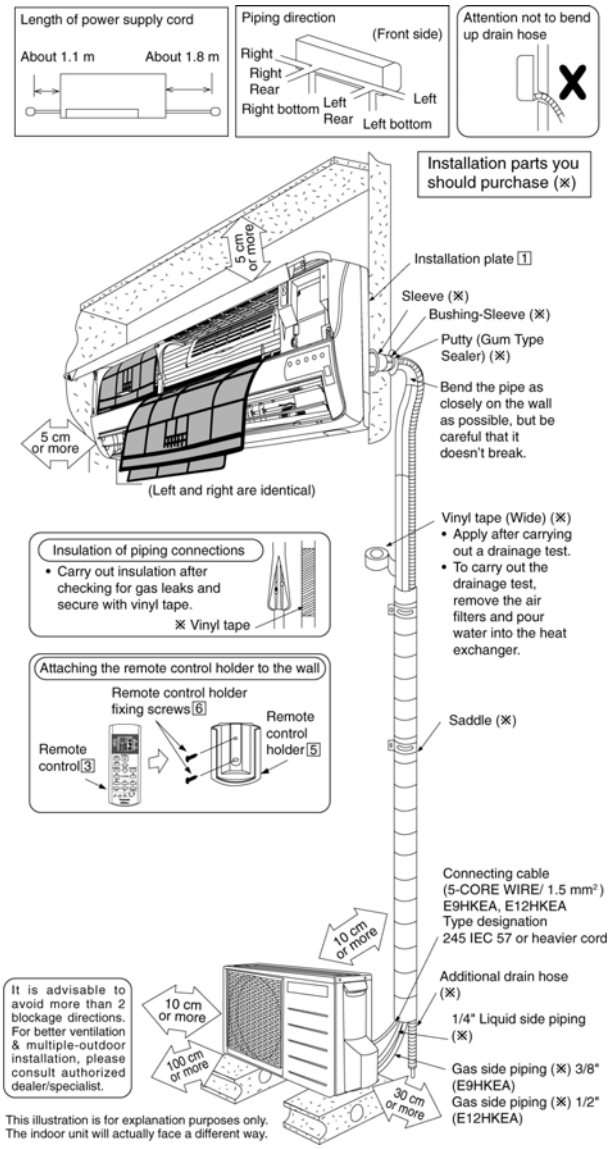

11.3. Indoor Unit

11.3.1. HOW TO FIX INSTALLATION PLATE

The mounting wall is strong and solid enough to prevent it from the vibration.

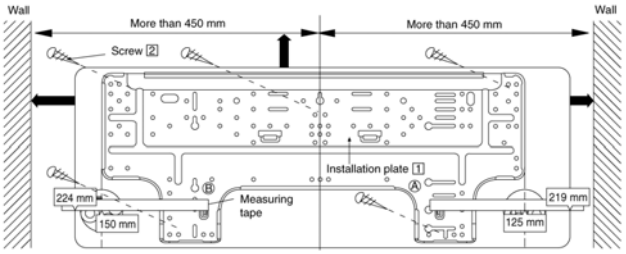

The centre of installation plate should be at more than 450 mm at right and left of the wall.
The distance from installation plate edge to ceiling should more than 67 mm.
From installation plate left edge to unit's left side is 74 mm.
From installation plate right edge to unit's right is 94 mm.

Ⓑ : For left side piping, piping connection for liquid should be about 15 mm from this line.
: For left side piping, piping connection for gas should be about 45 mm from this line.
: For left side piping, piping connection cable should be about 800 mm from this line.

1. Mount the installation plate on the wall with 5 screws or more.
   (If mounting the unit on the concrete wall, consider using anchor bolts.)
   - Always mount the installation plate horizontally by aligning the marking-off line with the thread and using a level gauge.

2. Drill the piping plate hole with ø70 mm hole-core drill.
   - Line according to the left and right side of the installation plate. The meeting point of the extended line is the centre of the hole. Another method is by putting measuring tape at position as shown in the diagram above. The hole centre is obtained by measuring the distance namely 150 mm and 125 mm for left and right hole respectively.
   - Drill the piping hole at either the right or the left and the hole should be slightly slanted to the outdoor side.

11.3.2. TO DRILL A HOLE IN THE WALL AND INSTALL A SLEEVE OF PIPING

1. Insert the piping sleeve to the hole.
2. Fix the bushing to the sleeve.
3. Cut the sleeve until it extrudes about 15 mm from the wall.

Caution
When the wall is hollow, please be sure to use the sleeve for tube ass'y to prevent dangers caused by mice biting the connecting cable.

4. Finish by sealing the sleeve with putty or caulking compound at the final stage.

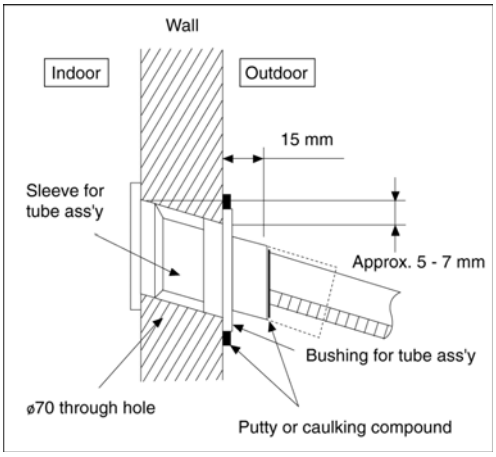

11.3.3. INDOOR UNIT INSTALLATION

1. For the right rear piping

Pull out the Indoor piping
↓
Install the Indoor Unit
↓
Secure the Indoor Unit
↓
Insert the connecting cable

2. For the right and right bottom piping

Pull out the Indoor piping
↓
Install the Indoor Unit
↓
Insert the connecting cable
↓
Secure the Indoor Unit

3. For the embedded piping

Replace the drain hose

↓

Bend the embedded piping

↓
- Use a spring bender or equivalent to bend the piping so that the piping is not crushed.

Install the Indoor Unit

↓

Cut and flare the embedded piping

↓
- When determining the dimensions of the piping, slide the unit all the way to the left on the installation plate.
- Refer to the section "Cutting and flaring the piping".

Pull the connecting cable into Indoor Unit

↓
- The inside and outside connecting cable can be connected without removing the front grille.

Connect the piping

↓
- Please refer to "Connecting the piping" column in outdoor unit section. (Below steps are done after connecting the outdoor piping and gas-leakage confirmation.)

Insulate and finish the piping

↓
- Please refer to "Piping and finishing" column of outdoor section and "Insulation of piping connections" column as mentioned in Indoor/ Outdoor Unit Installation.

Secure the Indoor Unit

Pull out the piping and drain hose

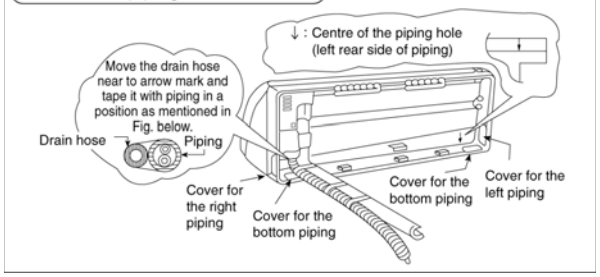

How to keep the cover

In case of the cover is cut, keep the cover at the rear of chassis as shown in the illustration for future reinstallation.

(Left, right and 2 bottom covers for piping.)

Insert the connecting cable

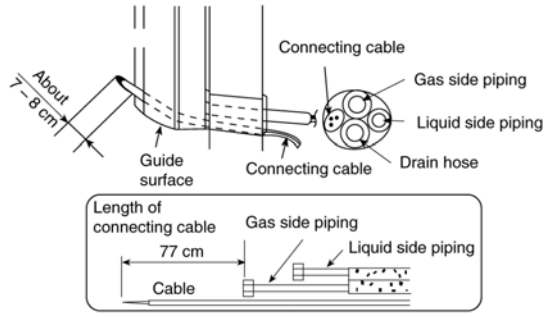

Install the indoor unit

Hook the indoor unit onto the upper portion of installation plate. (Engage the indoor unit with the upper edge of the installation plate). Ensure the hooks are properly seated on the installation plate by moving it in left and right.

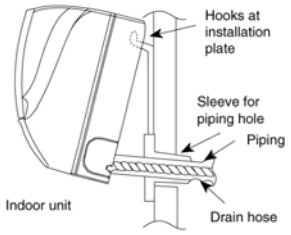

Secure the Indoor Unit

1. Power supply cord arrangement.
   Excess length of power supply cord should be arranged behind the chassis at piping keeping area as shown in the diagram without tying up in a bundle.
   Ensure that the power supply cord is not clamped in between unit's hook (2 position) and installation plate.
   Ensure that the power supply cord is not stretched between chassis back and installation plate. It may create squeak sound.
2. Press the lower left and right side of the unit against the installation plate until hooks engages with their slot (sound click).

Warning: Do not tie up power supply cord into a bundle by band. It may generate heat and cause fire.

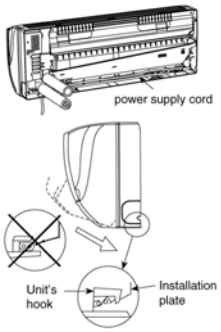

To take out the unit, push the PUSH marking at the bottom unit, and pull it slightly towards you to disengage the hooks from the unit.

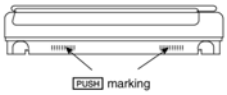

(This can be used for left rear piping and left bottom piping also.)

Exchange the drain hose and the cap

Rear view for left piping installation

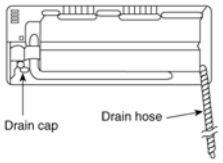

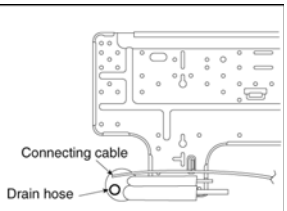

Adjust the piping slightly downwards.

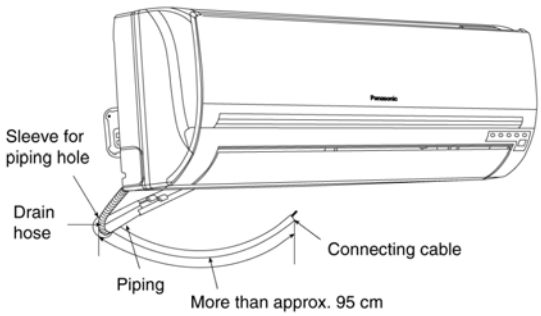

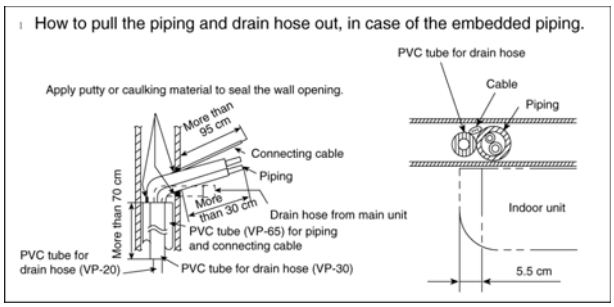

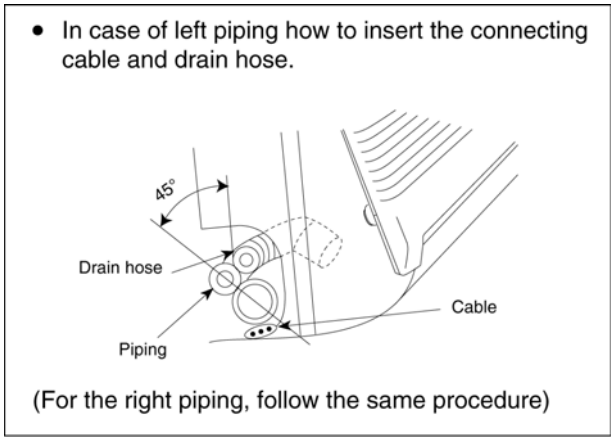

11.3.4. CONNECT THE CABLE TO THE INDOOR UNIT

1. The inside and outside connecting cable can be connected without removing the front grille.
2. Connecting cable between indoor unit and outdoor unit shall be approved polychloroprene sheathed 5 × 1.5 mm^2 flexible cord, type designation 245 IEC 57 or heavier cord.
   - Ensure the colour of wires of outdoor unit and the terminal Nos. are the same to the indoor's respectively.
   - Earth lead wire shall be longer than the other lead wires as shown in the figure for the electrical safety in case of the slipping out of the cord from the anchorage.

Terminals on the indoor unit	1	2	3	4	⏚
Colour of wires					
Terminals on the outdoor unit	1	2	3	4	⏚

   - Secure the cable onto the control board with the holder (clamper).

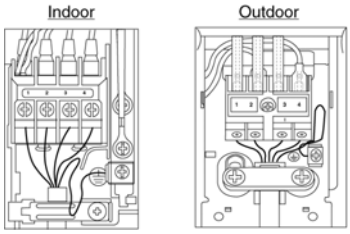

WIRE STRIPPING AND CONNECTING REQUIREMENT

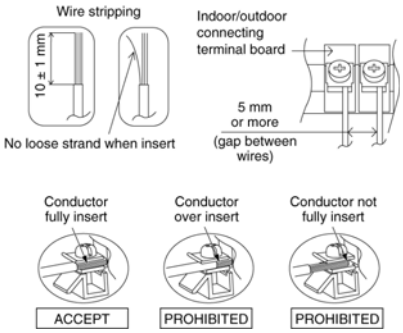

11.4. Outdoor Unit

11.4.1. INSTALL THE OUTDOOR UNIT

- After selecting the best location, start installation according to Indoor/Outdoor Unit Installation Diagram.
  1. Fix the unit on concrete or rigid frame firmly and horizontally by bolt nut (ø10 mm).
  2. When installing at roof, please consider strong wind and earthquake. Please fasten the installation stand firmly with bolt or nails.

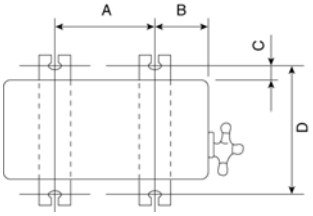

Model	A	B	C	D
E9HKEA, E12HKEA	570 mm	105 mm	18.5 mm	320 mm

11.4.2. CONNECTING THE PIPING

Connecting The Piping To Indoor Unit

Please make flare after inserting flare nut (locate at joint portion of tube assembly) onto the copper pipe (in case of using long piping).

Connect the piping

- Align the center of piping and sufficiently tighten the flare nut with fingers.
- Further tighten the flare nut with torque wrench in specified torque as stated in the table.

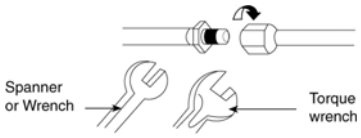

Model	Piping size (Torque)	
	Gas	Liquid
E9HKEA	3/8” [42 N•m]	1/4” [18 N•m)
E12HKEA	1/2” [55 N•m]	1/4” [18 N•m)
⚠ **CAUTION** Do not over tighten, over tightening cause gas leakage.		

Connecting The Piping To Outdoor Unit

Decide piping length and then cut by using pipe cutter. Remove burrs from cut edge. Make flare after inserting the flare nut (locate at valve) onto the copper pipe.

Align center of piping to valves and then tighten with torque wrench to the specified torque as stated in the table.

CUTTING AND FLARING THE PIPING

1. Please cut using pipe cutter and then remove the burrs.
2. Remove the burrs by using reamer. If burrs is not removed, gas leakage may be caused.
   Turn the piping end down to avoid the metal powder entering the pipe.
3. Please make flare after inserting the flare nut onto the copper pipes.

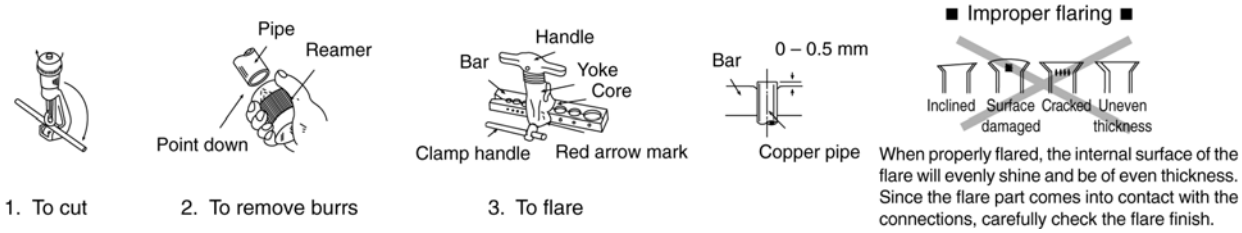

11.4.3. EVACUATION OF THE EQUIPMENT

WHEN INSTALLING AN AIR CONDITIONER, BE SURE TO EVACUATE THE AIR INSIDE THE INDOOR UNIT AND PIPES in the following procedure.

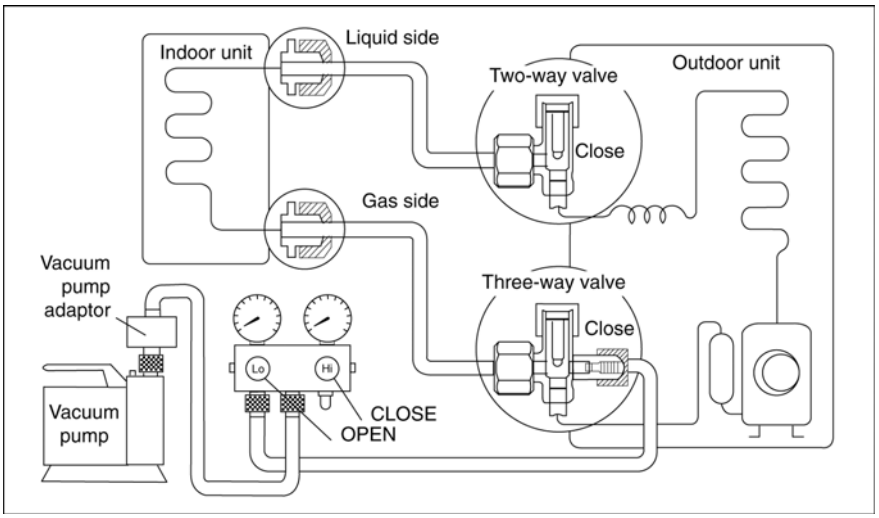

1. Connect a charging hose with a push pin to the Low side of a charging set and the service port of the 3-way valve.
   • Be sure to connect the end of the charging hose with the push pin to the service port.
2. Connect the center hose of the charging set to a vacuum pump with check valve, or vacuum pump and vacuum pump adaptor.
3. Turn on the power switch of the vacuum pump and make sure that the needle in the gauge moves from 0 cmHg (0 MPa) to -76 cmHg (-0.1 MPa). Then evacuate the air approximately ten minutes.
4. Close the Low side valve of the charging set and turn off the vacuum pump. Make sure that the needle in the gauge does not move after approximately five minutes.
   Note: BE SURE TO FOLLOW THIS PROCEDURE IN ORDER TO AVOID REFRIGERANT GAS LEAKAGE.
5. Disconnect the charging hose from the vacuum pump and from the service port of the 3-way valve.
6. Tighten the service port caps of the 3-way valve at a torque of 18 N•m with a torque wrench.
7. Remove the valve caps of both of the 2-way valve and 3-way valve. Position both of the valves to “OPEN” using a hexagonal wrench (4 mm).
8. Mount valve caps onto the 2-way valve and the 3-way valve.
   • Be sure to check for gas leakage.

CAUTION

- If gauge needle does not move from 0 cmHg (0 MPa) to -76 cmHg (-0.1 MPa), in step ③ above take the following measure:
- If the leak stops when the piping connections are tightened further, continue working from step ③.
- If the leak does not stop when the connections are retightened, repair the location of leak.
- Do not release refrigerant during piping work for installation and reinstallation. Take care of the liquid refrigerant, it may cause frostbite.

11.4.4. CONNECT THE CABLE TO THE OUTDOOR UNIT

(FOR DETAIL REFER TO WIRING DIAGRAM AT UNIT)

1. Remove the control board cover from the unit by loosening the screw.
2. Connecting cable between indoor unit and outdoor unit shall be approved polychloroprene sheathed 5 x 1.5 mm^2 flexible cord, type designation 245 IEC 57 or heavier cord.

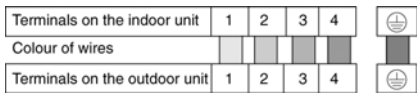

3. Secure the cable onto the control board with the holder (clamper).
4. Attach the control board cover back to the original position with the screw.
5. For wire stripping and connection requirement, refer to page 24.

11.4.5. PIPE INSULATION

1. Please carry out insulation at pipe connection portion as mentioned in Indoor/Outdoor Unit Installation Diagram. Please wrap the insulated piping end to prevent water from going inside the piping.
2. If drain hose or connecting piping is in the room (where dew may form), please increase the insulation by using POLY-E FOAM with thickness 6 mm or above.

12 Operation and Control

12.1. Basic Function

Inverter control, which equipped with a microcomputer in determining the most suitable operating mode as time passes, automatically adjusts output power for maximum comfort always. In order to achieve the suitable operating mode, the microcomputer maintains the set temperature by measuring the temperature of the environment and performing temperature shifting. The compressor at outdoor unit is operating following the frequency instructed by the microcomputer at indoor unit that judging the condition according to internal setting temperature and intake air temperature.

12.1.1. Internal Setting Temperature

Once the operation starts, remote control setting temperature will be taken as base value for temperature shifting processes. These shifting processes are depending on the air conditioner settings and the operation environment. The final shifted value will be used as internal setting temperature and it is updated continuously whenever the electrical power is supplied to the unit.

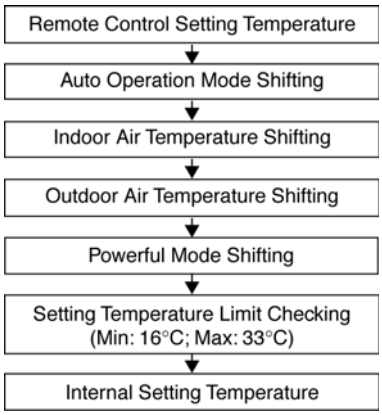

12.1.2. Airflow Direction

1. There are two types of airflow, vertical airflow (directed by horizontal vane) and horizontal airflow (directed by vertical vanes).
2. Control of airflow direction can be automatic (angles of direction is determined by operation mode, heat exchanger temperature and intake air temperature) and manual (angles of direction can be adjusted using remote control).

12.1.2.1. Vertical Airflow

Operation Mode	Airflow Direction			Vane Angle (°)				
				1	2	3	4	5
Heating	Auto with Heat Exchanger Temperature	A	Upward fix	3				
		B	Downward fix	64				
		C	Upward fix	3				
		D	Downward fix	3				
	Manual			3	17	33	49	63
Cooling, Soft Dry and Ion	Auto			8 ~ 36				
	Manual			8	15	22	30	36
Mode Judgment in Auto	Auto			8				
	Manual			8	15	22	30	36

1. Automatic vertical airflow direction can be set using remote control; the vane swings up and down within the angles as stated above. For heating mode operation, the angle of the vane depends on the indoor heat exchanger temperature as Figure 1 below. When the air conditioner is stopped using remote control, the vane will shift to close position.

2. Manual vertical airflow direction can be set using remote control; the angles of the vane are as stated above and the positions of the vane are as Figure 2 below. When the air conditioner is stopped using remote control, the vane will shift to close position.

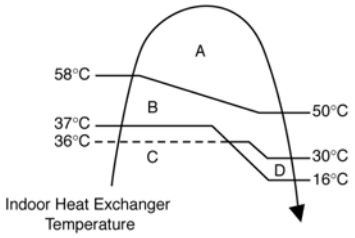

Figure 1

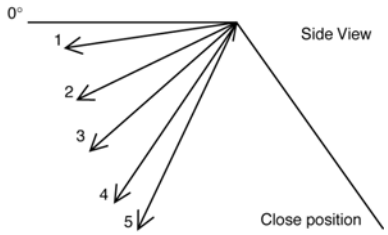

Figure 2

12.1.2.2. Horizontal Airflow

1. Automatic horizontal airflow direction can be set using remote control; the vane swings left and right within the angles as stated below. For heating mode operation, the angle of the vane depends on the indoor heat exchanger temperature as Figure 1 below.

Operation Mode		Vane Angle (°)
Heating, with heat exchanger temperature	A	65 ~ 115
	B	90
Cooling, Soft Dry and Ion		65 ~ 115

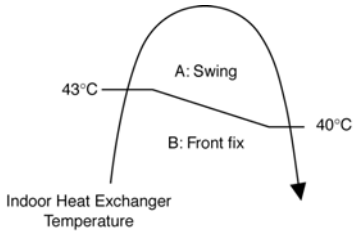

Figure 1

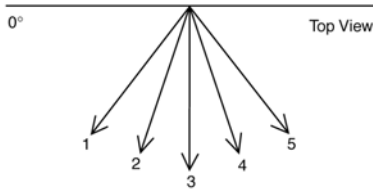

Figure 2

2. Manual horizontal airflow direction can be set using remote control; the angles of the vane are as stated below and the positions of the vane are as Figure 2 above.

Pattern	1	2	3	4	5
Airflow Direction Patterns at Remote Control					
Vane Angle (°)	90	65	78	102	115

12.1.3. Quiet operation (Cooling Mode/Cooling area of Dry Mode)

A. Purpose

To provide quiet cooling operation compare to normal operation.

B. Control condition

a. Quiet operation start condition

• When “quiet” button at remote control is pressed.
Quiet LED illuminates.

b. Quiet operation stop condition

1. When one of the following conditions is satisfied, quiet operation stops:
   a. Powerful button is pressed.
   b. Stop by OFF/ON switch.
   c. Timer “off” activates.
   d. Quiet button is pressed again.
2. When quiet operation is stopped, operation is shifted to normal operation with previous setting.
3. When fan speed is changed, quiet operation is shifted to quiet operation of the new fan speed.
4. When operation mode is changed, quiet operation is shifted to quiet operation of the new mode.

5. During quiet operation, if timer “on” activates, quiet operation maintains.
6. After off, when on back, quiet operation is not memorised.

C. Control contents

1. Fan speed is changed from normal setting to quiet setting of respective fan speed.
   This is to reduce sound of Hi, Me, Lo for 3dB.
2. Fan speed for quiet operation is -1 step from setting fan speed.

12.1.3.1. Quiet operation (Heating)

A. Purpose

To provide quiet heating operation compare to normal operation.

B. Control condition

a. Quiet operation start condition

• When “quiet” button at remote control is pressed.
Quiet LED illuminates.

b. Quiet operation stop condition

1. When one of the following conditions is satisfied, quiet operation stops:
   a. Powerful button is pressed.
   b. Stop by OFF/ON switch.
   c. Timer “off” activates.
   d. Quiet button is pressed again.
2. When quiet operation is stopped, operation is shifted to normal operation with previous setting.
3. When fan speed is changed, quiet operation is shifted to quiet operation of the new fan speed.
4. When operation mode is changed, quiet operation is shifted to quiet operation of the new mode, except fan only mode.
5. During quiet operation, if timer “on” activates, quiet operation maintains.
6. After off, when on back, quiet operation is not memorised.

C. Control contents

a. Fan Speed manual

1. Fan speed is changed from normal setting to quiet setting of respective fan speed.
   This is to reduce sound of Hi, Me, Lo for 3dB.
2. Fan speed for quiet operation is -1 step from setting fan speed.
3. Fan Speed Auto
   Indoor FM RPM depends on pipe temp sensor of indoor heat exchanger.

12.1.4. Powerful Mode Operation

When the powerful mode is selected, the internal setting temperature will shift to achieve the setting temperature quickly.

(a) Cooling Operation

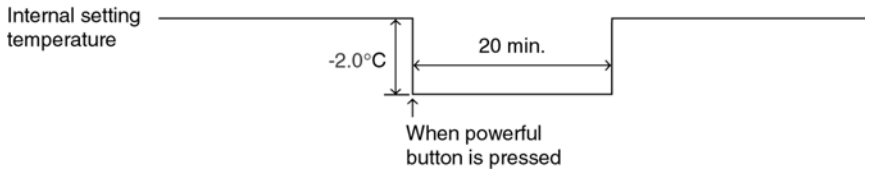

(b) Soft Dry Operation

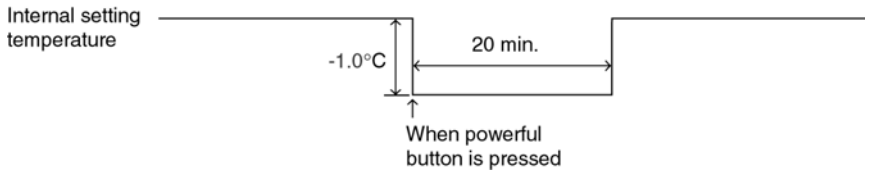

(c) Heating Operation

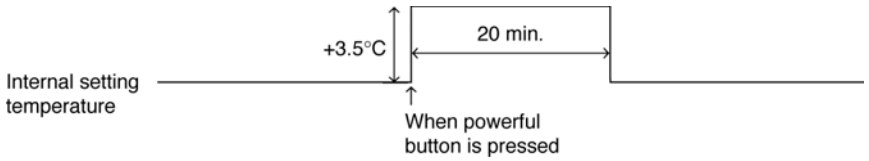

12.1.5. ON Timer Control

ON timer can be set using remote control, the unit with timer set will start operate earlier than the setting time. This is to provide a comfortable environment when reaching the set ON time.

60 minutes before the set time, indoor (at fan speed of Lo-) and outdoor fan motor start operate for 30 seconds to determine the indoor intake air temperature and outdoor air temperature in order to judge the operation starting time.

From the above judgment, the decided operation will start operate earlier than the set time as shown below.

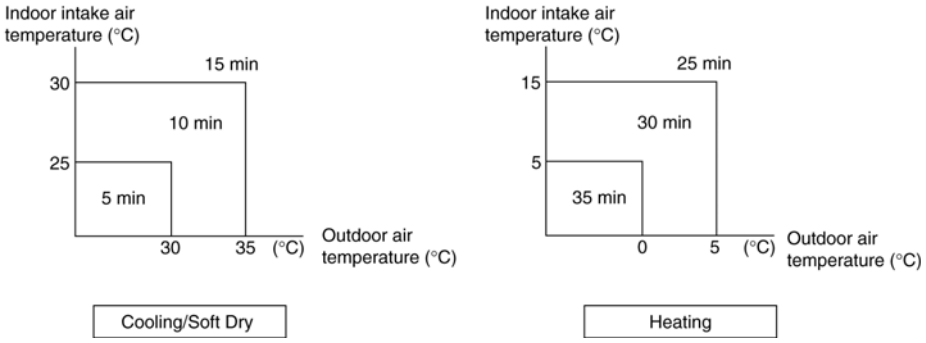

12.1.6. OFF Timer Control

OFF timer can be set using remote control, the unit with timer set will stop operate at set time.

12.1.7. Auto Restart Control

1. When the power supply is cut off during the operation of air conditioner, the compressor will re-operate within three to four minutes (there are 10 patterns between 2 minutes 58 seconds and 3 minutes 52 seconds to be selected randomly) after power supply resumes.
2. This type of control is not applicable during ON/OFF Timer setting.

12.1.8. Ionizer Operation

Purpose

To provide fresh air effect to users by discharging minus ion to air.

Control Condition

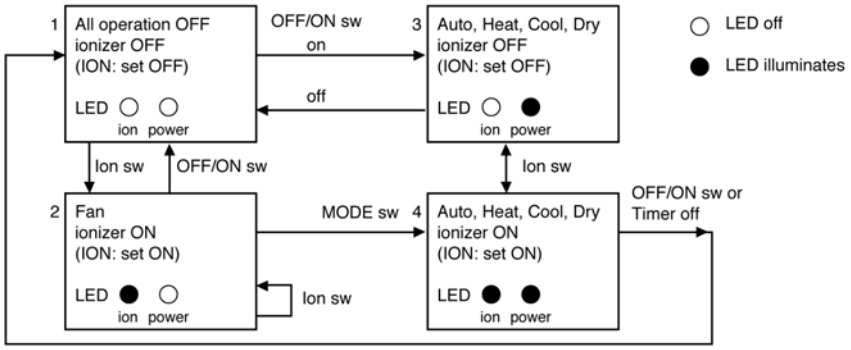

a. Ionizer Only Operation.

1. When air-conditioner unit is at “OFF” condition (standby) and ION operation button at remote control is pressed.
   Fan & ionizer on, ION LED illuminates, but power LED maintain off. (1 → 2)
   However, fan speed can be adjusted later by customer during this operation.

Fan speed	
manual	Remote Control set fan speed
Auto	Repetition of 8 patterns as shown below

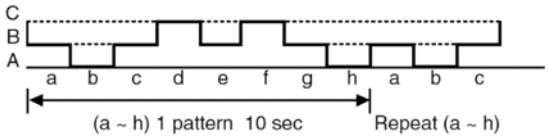

   Airflow direction (Horizontal Vane) control:
   Follow vane direction control at cooling mode.
   Horizontal vane can be changed by customer during ion only operation.

b. Operation Mode + Ionizer Operation.

1. Ionising Operation Start Condition
   When air conditioner unit is in “ON” condition (Heat, Cool, Dry, Auto mode) and ION operation button at remote control is pressed. Ionizer on & ION LED illuminates. (3 → 4)
   Power LED also illuminates.
2. Ionising Operation Stop Condition
   When one of the following condition is satisfied, ION operation stops.
   a. Stopped by ON/OFF switch.
   b. Timer OFF activates.
   c. ION feedback signal shows error.
3. Ionizer operation status is not memorised by micon. After OFF, when operation is “ON” again, air conditioner operates without ionizer operation.

12.2. Protection Control

12.2.1. Time Delay Safety Control

• Compressor will not start for three minutes after stop of the operation.

12.2.2. 30 Seconds Forced Operation

• Once compressor starts the operation, it will not stop its operation for 30 seconds. However, it can be stopped with the remote controller or the Auto button on the indoor unit.

12.2.3. Total Running Current Control

1. When the total running current exceeds I1, compressor operation frequency is reduced. If it reaches below I1, the operation frequency is increased. (But, up to programmed frequency.)
2. If total running current exceeds I2, compressor is stopped immediately.
3. If it happens three (3) times within 20 minutes, operation will be stopped and Timer LED blinks. (“F98” is activating.)

	Running current	CS-E9HKEA	CS-E12HKEA
Cooling	I1	3.7A	5.8A
	I2	25.0A	25.0A
Heating	I1	5.9A	8.2A
	I2	25.0A	25.0A

12.2.4. IPM (Power transistor) Protection Control (DC Peak detection)

Abnormal Current Control

• If inverter load current (DC peak) exceeds a rated value, compressor will be stopped immediately. When the excess occurs within 30 seconds after operation, it restarts in 1 minute and when after 30 seconds, restarts in 2 minutes.

• If the excess continuously occurs 7 times within 30 minutes after compressor starts, the unit will be stopped and timer LED on the indoor unit will be blinking. (“F99” is to be confirmed.)

IPM Overheating Prevention Control

- If temperature of IPM exceeds 103°C, compressor will be stopped. It will restart in 2 minutes. Temperature for restarting: 90°C.
- If the excess occurs 4 times within 30 minutes after compressor starts, the compressor will be stopped and timer LED on the indoor unit will be blinking. (“F96” is to be confirmed.)

12.2.5. Compressor Overheating Prevention Control

1. If discharge pipe temperature exceeds 100°C, compressor power will be limited.
2. If discharge pipe temperature exceeds 112°C, compressor will be stopped.
3. If the above excess occurs 4 times per 10 minutes, timer LED will be blinking. (“F97” is to be confirmed.)

12.2.6. Outdoor High Pressure Prevention Control (Cooling and Dry operations)

1. If outdoor heat exchanger temperature exceeds 63°C in cooling or dry operation, compressor will be stopped.
2. Timer LED is not blinking. (“F95” is memorized, then.)

12.2.7. Compressor Protection Control (Refrigeration Cycle Abnormality)

In cooling and Dry operations

1. When compressor is operated continuously for 5 minutes in the maximum cooling power: a running current of 0.7 - 1.4A and “[Indoor intake air temperature] - [Indoor heat exchanger temperature]” < 4°C, compressor will be stopped.
2. If the above excess occurs twice for 20 minutes, timer LED is to be blinking. (“F91” is to be confirmed.)

In Heating operation

1. When compressor is operated continuously for 5 minutes in the rated heating power: a running current of 0.7 - 1.4A and “[Indoor heat exchanger temperature] - [Indoor intake air temperature]” < 5°C, compressor will be stopped.
2. If the above excess occurs twice for 20 minutes, timer LED is to be blinking. (“F91” is to be confirmed.)

12.2.8. Four-way Valve Operation Detection Control (Switching Abnormality between Cooling and Heating)

In Cooling operation

1. When indoor heat exchanger temperature exceeds 45°C in 4 minutes after compressor starts, compressor will be stopped.
2. If the above excess occurs 4 times per 30 minutes, timer LED is to be blinking. (“F11” is to be confirmed.)

In Heating operation

1. When indoor heat exchanger temperature is below 0°C in 4 minutes after compressor starts, compressor will be stopped.
2. If the above excess occurs 4 times per 30 minutes, timer LED is to be blinking. (“F11” is to be confirmed.)

12.2.9. Anti-Freezing Control (Cooling and Dry operations)

Limit of Cooling power

1. When temperature of indoor heat exchanger is below 5°C, operating frequency will be decreased.
2. When temperature of indoor heat exchanger exceeds 7°C, operating frequency will be increased. (But, up to programmed frequency.)
3. When temperature of indoor heat exchanger is below 0°C continuously for 6 minutes, compressor will be stopped.
4. Timer LED is not blinking. (“F99” is memorized, then.)

Limit of Indoor fan speed

- When temperature of indoor heat exchanger is below 6°C (2°C at Dry) continuously for 6 minutes, indoor fan speed will be increased by 50 rpm.

12.2.10. Outdoor Air Temperature Control

In Cooling and Dry operations

1. When outdoor air temperature is below 25°C, the maximum power will be limited up to about 80 - 100% of the rated power.
2. When outdoor air temperature is below 18°C, the maximum power will be limited up to about 50 - 100% of the rated power.
3. When outdoor air temperature is below 11°C, the maximum power will be limited up to about 26 - 81% of the rated power.

12.2.11. Indoor Intake Air Temperature Control (Heating operation)

1. When indoor air temperature is 35°C or more, the maximum power will be limited up to the rated power.
2. When fan speed is set at “Lo” and intake air temperature is below 21°C, the maximum power will be limited up to the rated power.

13 Servicing Mode

13.1. Auto Switch Operation

The below operations will be performed by pressing the “AUTO” switch.

1. AUTO OPERATION MODE
   The Auto operation will be activated immediately once the Auto Switch is pressed and release before 5 sec..
2. TEST RUN OPERATION (FOR PUMP DOWN/SERVICING PURPOSE)
   The Test Run operation will be activated if the Auto Switch is pressed continuously for more than 5 sec. to below 8 sec..
   A “beep” sound will occur at the fifth sec., in order to identify the starting of Test Run operation.
3. HEATING TRIAL OPERATION
   Press the AUTO switch continuously for more than 8 sec. to below 11 sec. and release when a “beep, beep” sound is heard at eight sec. (However, a “beep” sound is occurred at fifth sec.) then press remote controller “A/C Reset” button once. Remote controller signal will activate operation to force heating mode.
4. REMOTE CONTROLLER RECEIVING SOUND ON/OFF
   The ON/OFF of remote controller receiving sound can be change over by following steps:
   a. Press the AUTO switch continuously for more than 16 sec. to below 21 sec. a “beep, beep, beep, beep” sound will occur at the sixteenth sec..
   b. Press the “A/C Reset” button once. Remote controller signal will activate the remote controller sound setting mode.
   c. Press the “Check” button once at remote controller. A “beep” sound will occur.
   d. Press the AUTO switch once to select remote controller receiving sound ON/OFF. A “beep” sound indicates receiving sound ON, and a long “beep” sound indicates receiving sound OFF.

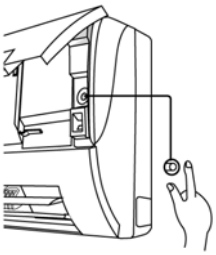

13.2. Indicator Panel

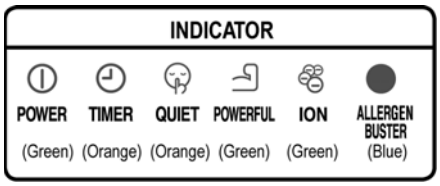

LED	POWER	TIMER	QUIET	POWERFUL	ION	ALLERGEN BUSTER
Color	Green	Orange	Orange	Orange	Green	Blue
Light ON	Operation ON	Timer Setting ON	Quiet Mode ON	Powerful Mode ON	Ion Mode ON	Operation ON
Light OFF	Operation OFF	Timer Setting OFF	Quiet Mode OFF	Powerful Mode OFF	Ion Mode OFF	Operation OFF

Note:

- If POWER LED is blinking, the possible operations of the unit are Hot Start, during Deice operation, operation mode judgment, or ON timer sampling.
- If Timer LED is blinking, there is an abnormality operation occurs.
- If Ionizer, LED is blinking, there is an abnormality of Ionizer occurs.

14 Troubleshooting Guide

14.1. Refrigeration Cycle System

In order to diagnose malfunctions, make sure that there are no electrical problems before inspecting the refrigeration cycle. Such problems include insufficient insulation, problem with the power source, malfunction of a compressor and a fan.

The normal outlet air temperature and pressure of the refrigeration cycle depends on various conditions, the standard values for them are shown in the table to the right.

Normal Pressure and Outlet Air Temperature (Standard)

	Gas pressure MPa (kg/cm²G)	Outlet air temperature (°C)
Cooling Mode	0.9 ~ 1.2 (9 ~ 12)	12 ~ 16
Heating Mode	2.3 ~ 2.9 (23 ~ 29)	36 ~ 45

★ Condition:
- Indoor fan speed; High
- Outdoor temperature 35°C at cooling mode and 7°C at heating mode.
- Compressor operates at rated frequency

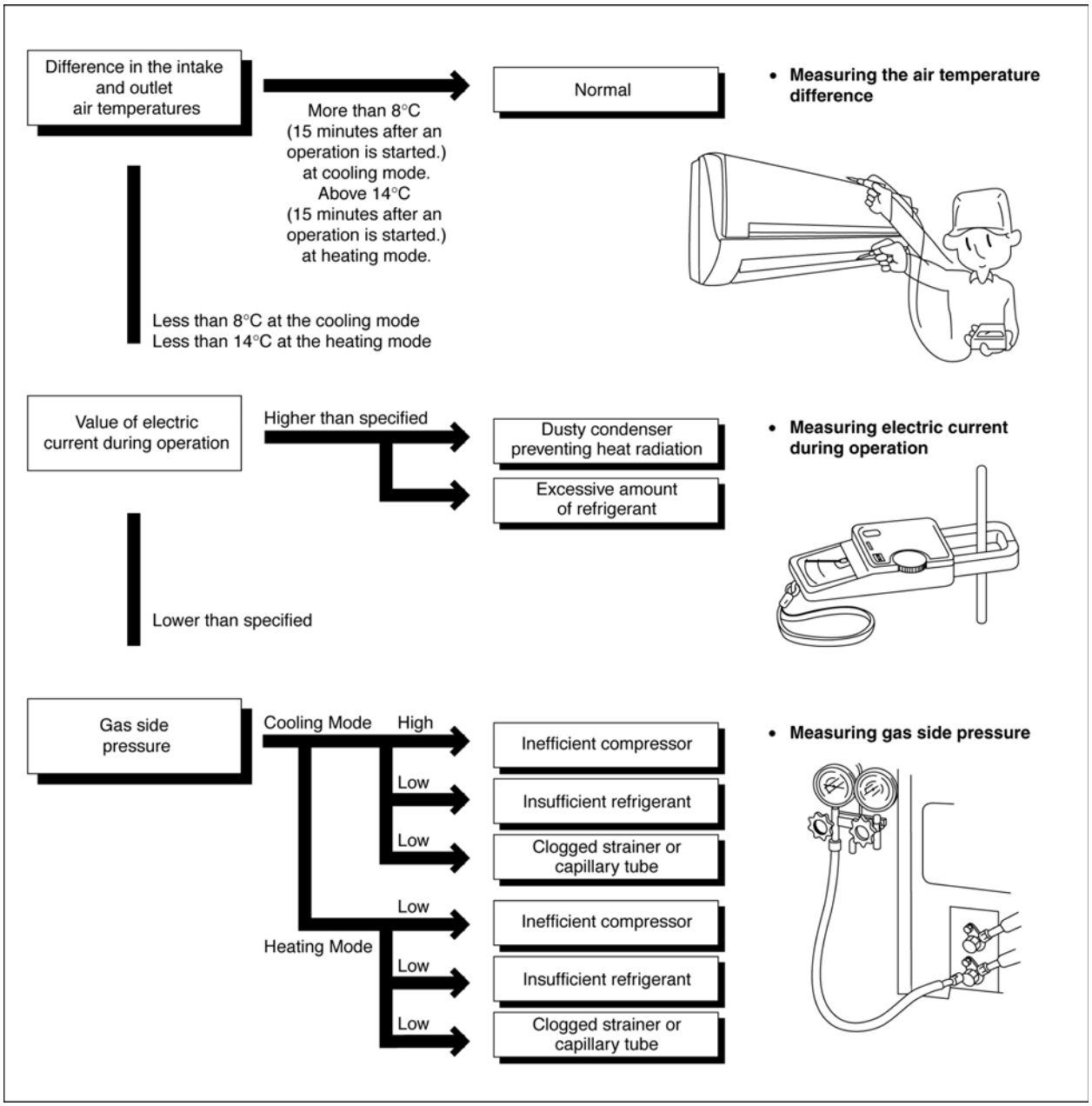

14.2. Relationship Between The Condition Of The Air Conditioner And Pressure And Electric Current

Condition of the air conditoner	Cooling Mode			Heating Mode		
	Low Pressure	High Pressure	Electric current during operation	Low Pressure	High Pressure	Electric current during operation
Insufficient refrigerant (gas leakage)	↘	↘	↘	↘	↘	↘
Clogged capillary tube or Strainer	↘	↘	↘	↗	↗	↗
Short circuit in the indoor unit	↘	↘	↘	↗	↗	↗
Heat radiation deficiency of the outdoor unit	↗	↗	↗	↘	↘	↘
Inefficient compression	↗	↘	↘	↗	↘	↘

- Carry on the measurements of pressure, electric current, and temperature fifteen minutes after an operation is started.

14.3. Breakdown Self Diagnosis Function

Once abnormality detected during operation, the unit will immediately stop its operation (Timer LED is blinking) and maximum of three error codes (abnormality) will be saved in memory. The abnormality of the operation can be identified through the below breakdown diagnosis method:

- Press “CHECK” button at remote controller continuously for more than five seconds to turn on the diagnosis mode, “H11” will be displayed at remote controller.
- By pressing the TMER “∧” button once, next error code will be displayed; press “V” button once, previous error code will be displayed.
- If error code displayed matches the error code saved in unit memory (abnormality detected), “beep, beep, beep....” sounds will be heard for 4 seconds and Power LED will light on. Otherwise, one “beep” sound is heard.

If “CHECK” button is press again or without any operation for 30 seconds, the diagnosis mode will turn off.

14.4. Error Codes Table

Diagnosis display	Abnormality / Protection control	Abnormality Judgement	Emergency operation	Primary location to verify
H00	No abnormality detected	—	Normal operation	—
H11	Indoor / outdoor abnormal communication	> 1 min after starting operation	Indoor fan operation only	• Internal / external cable connections • Indoor / Outdoor PCB
H12	Connection capability rank abnormal	—	—	—
H14	Indoor intake air temperature sensor abnormality	Continue for 5 sec.	—	• Intake air temperature sensor (detective or disconnected)
H15	Outdoor compressor temperature sensor abnormality	Continue for 5 sec.	—	• Compressor temperature sensor (detective or disconnected)
H16	Outdoor Current Transformer open circuit	—	—	• Outdoor PCB • IPM (Power transistor) module
H19	Indoor fan motor merchanism locked	—	—	• Indoor PCB • Fan motor
H23	Indoor heat exchanger temperature sensor abnormality	Continue for 5 sec.	O (Cooling only)	• Heat exchanger temperature sensor (defective or disconnected)
H26	Ionizer breakdown	—	—	• Ionizer
H27	Outdoor intake air temperature sensor abnormality	Continue for 5 sec.	O	• Outdoor temperature sensor (defective or disconnected)
H28	Outdoor heat exchanger temperature sensor abnormality	Continue for 5 sec.	O	• Outdoor heat exchanger temperature sensor (defective or disconnected)
H30	Outdoor discharge air temperature sensor abnormality	Continue for 5 sec.	—	• Outdoor temperature sensor (defective or disconnected)
H33	Indoor/Outdoor wrong connection	—	—	• Indoor/Outdoor supply voltage
H38	Indoor / outdoor mismatch (brand code)	—	—	—
H97	Outdoor fan motor mechanism locked	2 times occurance within 30 minutes	—	• Indoor PCB • Fan motor
H98	Indoor high pressure protection	—	—	• Air filter dirty • Air circulation short circuit
H99	Indoor heat exchanger anti-freezing protection	—	—	• Insufficient refrigerant • Air filter dirty
F11	Cooling / Heating cycle changeover abnormality	4 times occurance within 30 minutes	—	• 4-way valve • V-coil
F90	PFC control	4 times occurance within 10 minutes	—	• Voltage at PFC
F91	Refrigeration cycle abnormality	2 times occurance within 20 minutes	—	• No refrigerant (3-way valve is closed)
F93	Compressor rotation failure	—	—	• Compressor
F95	Cool high pressure protection	4 times occurance within 20 minutes	—	• Outdoor refrigerant circuit
F96	IPM (power transistor) overheating protection	—	—	• Excess refrigerant • Improper heat radiation • IPM (Power transistor)
F97	Outdoor compressor overheating protection	4 times occurance within 10 minutes	—	• Insufficient refrigerant • Compressor
F98	Total running current protection	3 times occurance within 20 minutes	—	• Excess refrigerant • Improper heat radiation
F99	Outdoor Direct Current (DC) peak detection	7 times occurance continuously	—	• Outdoor PCB • IPM (Power transistor) • Compressor

Note:
“O” - Frequency measured and fan speed fixed.

The memory data of error code is erased when the power supply is cut off, or press the Auto Switch until “beep” sound heard following by pressing the “RESET” button at remote controller.
Although operation forced to stop when abnormality detected, emergency operation is possible for certain errors (refer to Error Codes Table) by using remote controller or Auto Switch at indoor unit. However, the remote controller signal receiving sound is changed from one “beep” to four “beep” sounds.

15 Disassembly and Assembly Instructions

⚠ WARNING

- Caution! When handling electronic controller, be careful of electrostatic discharge.
- Be sure to return the wiring to its original position.
- There are many high voltage components within the heat sink cover so never touch the interior during operation. Wait at least two minutes after power has been turned off.

15.1. Indoor Electronic Controller and Control Board

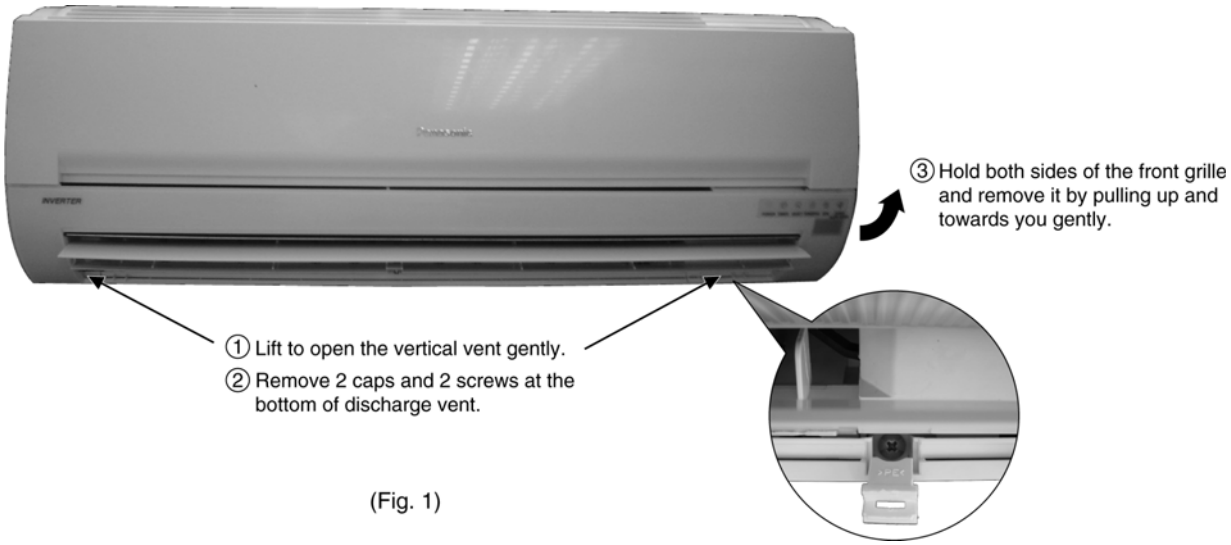

(Fig. 1)

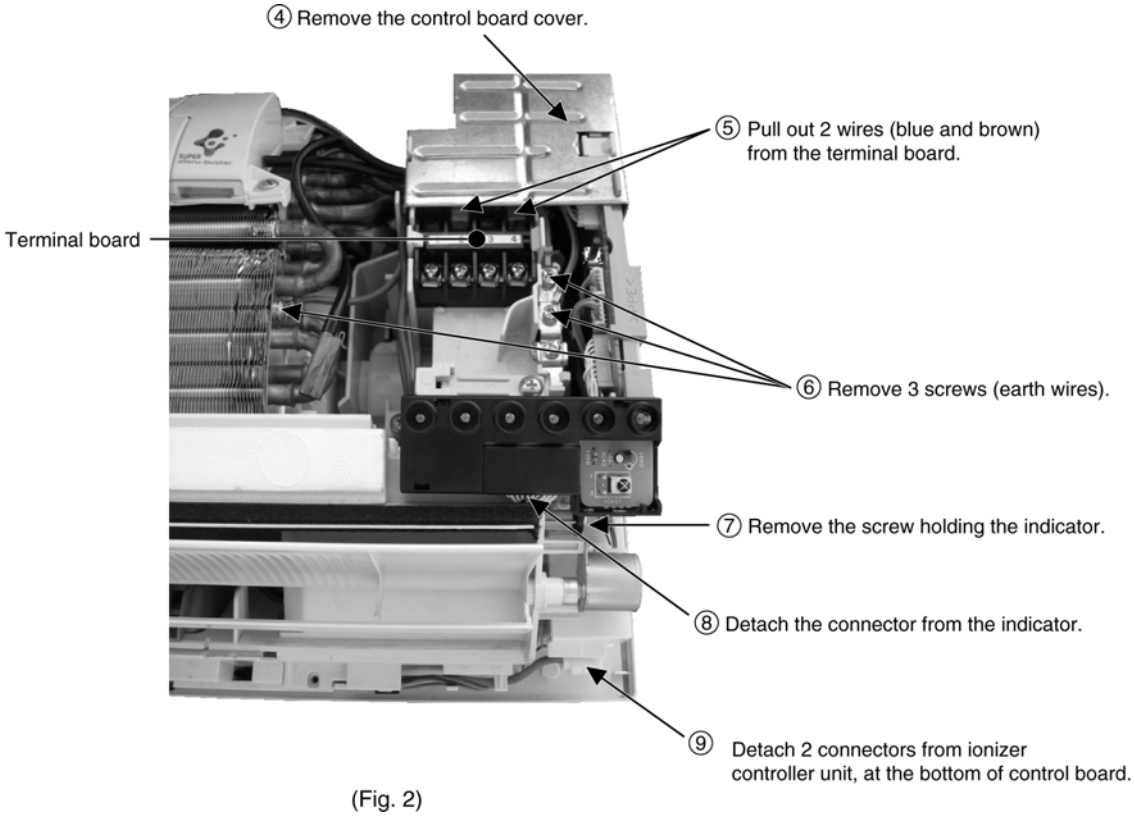

(Fig. 2)

⑫ Press the fastener to the left and take out the particular piece.

⑩ Press the fastener to the right and take out the particular piece. Pull out the main electronic controller halfway.

Particular pieces

Control board fastener

⑬ Press both the fasteners of terminal board outward (left and right) and remove the terminal board from its location.

⑭ Remove the red wire from the terminal board.

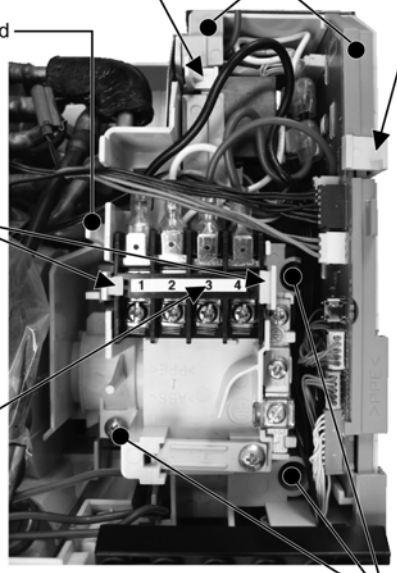

(Fig. 3)

3 screws holding the control board to the unit

CN-DATA

⑪ Detach 6 connectors as labelled from the electronic controller. Then, pull it out slowly while pressing the fastener to the right.

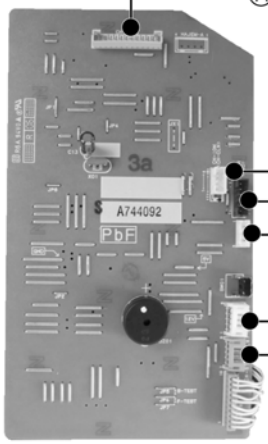

CN-ION

CN-TH

CN-SONIC

CN-STM1

CN-STM2

(Fig. 4)

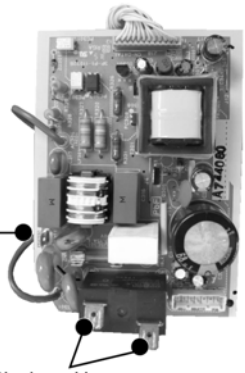

White wire to terminal board

Black and brown wires to terminal board

⑮ Detach 3 wires and one connector as labelled from the electronic controller. Then, pull it out slowly while pressing the fastener to the left.

(Fig. 5)

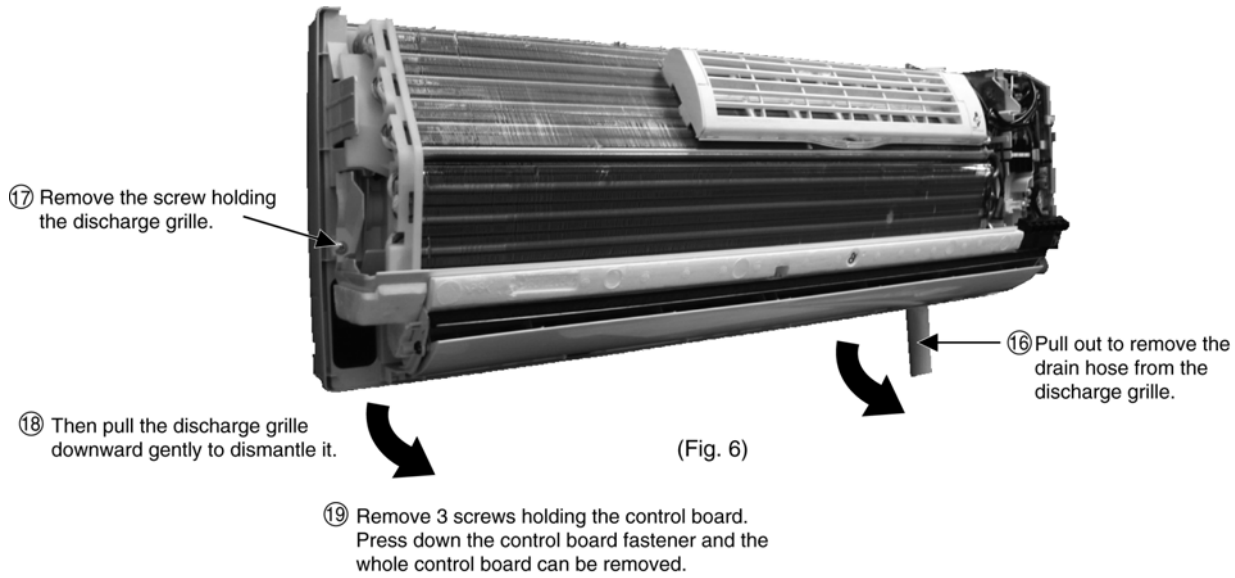

(Fig. 6)

15.2. Indoor Cross Flow Fan and Fan Motor

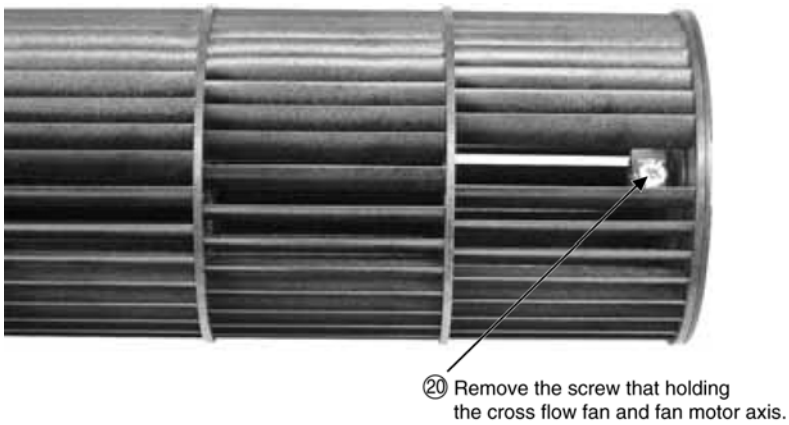

(Fig. 7)

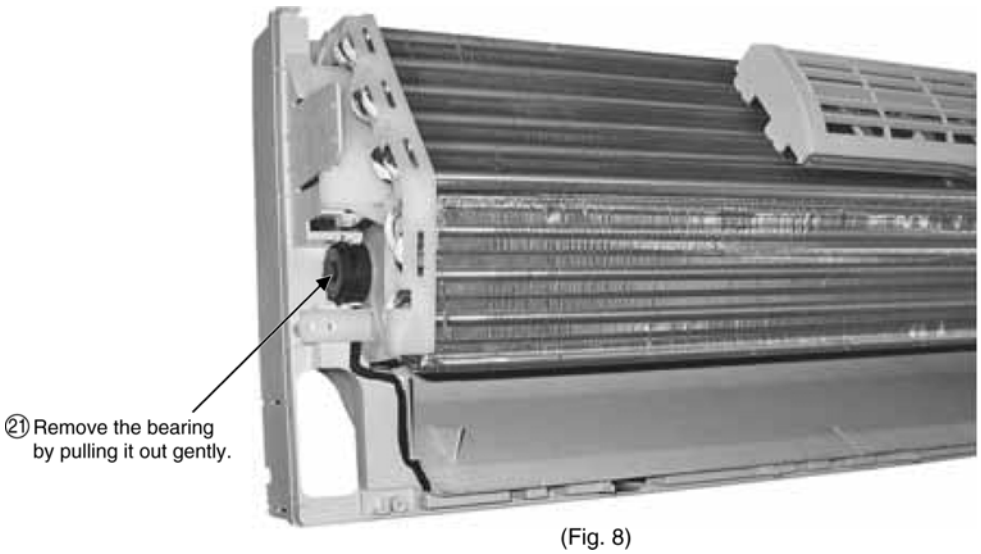
㉑ Remove the bearing
by pulling it out gently.

(Fig. 8)

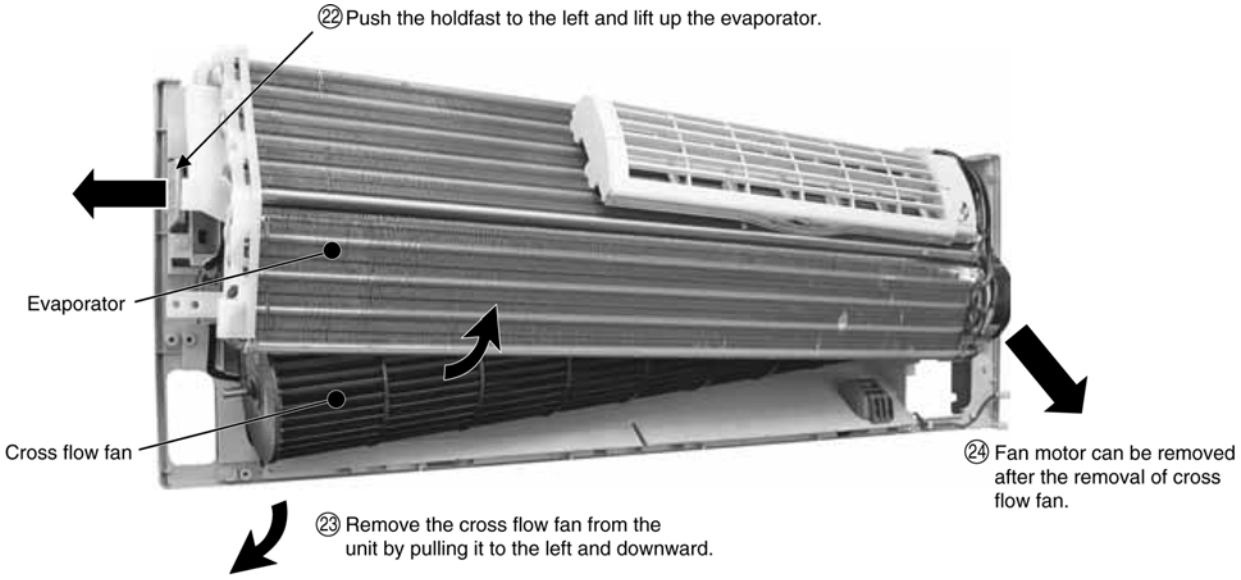
㉒ Push the holdfast to the left and lift up the evaporator.
Evaporator
Cross flow fan
㉔ Fan motor can be removed
after the removal of cross
flow fan.
㉓ Remove the cross flow fan from the
unit by pulling it to the left and downward.

(Fig. 9)

15.3. Outdoor Electronic Controller Removal Procedure

⚠ Caution! When handling electronic controller, be careful of electrostatic discharge.

1. Remove the 3 screws of the Top Panel.

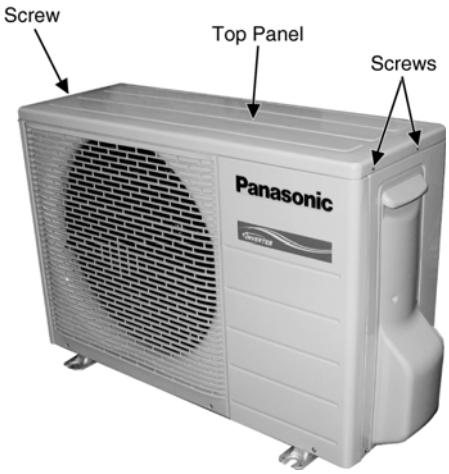

Fig. 1

2. Remove the 6 screws of the Front Panel.

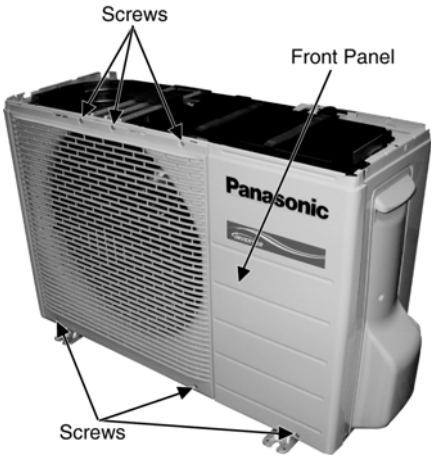

Fig. 2

3. Remove the screw of the Terminal Board Cover.
4. Remove the Top Cover of the Control Board by 4 hooks.

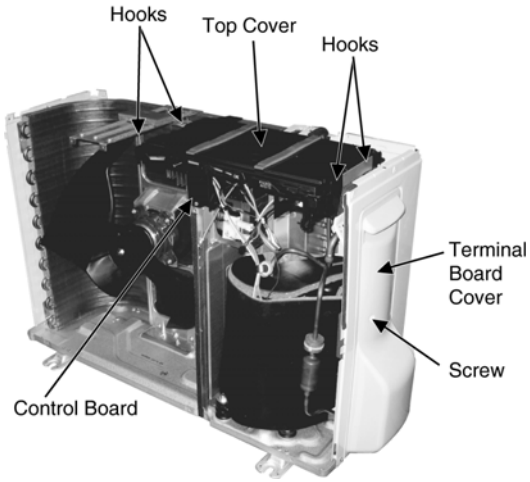

Fig. 3

5. Remove the Control Board as follows:

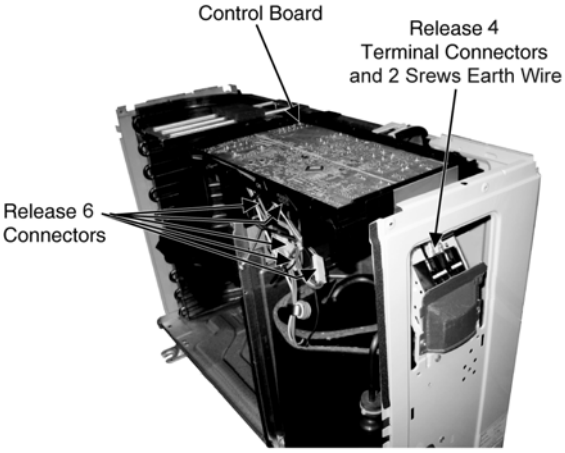

Fig. 4

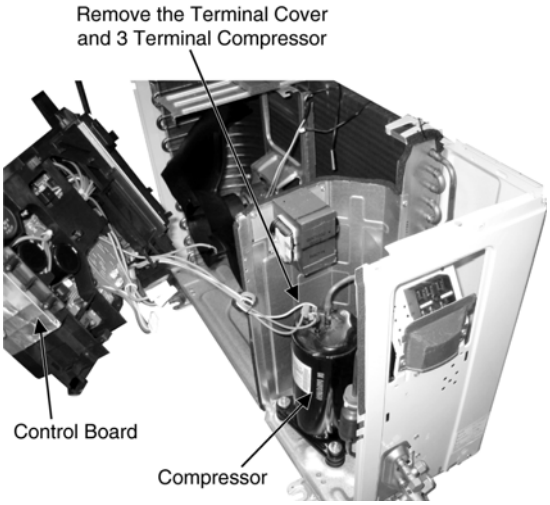

Fig. 5

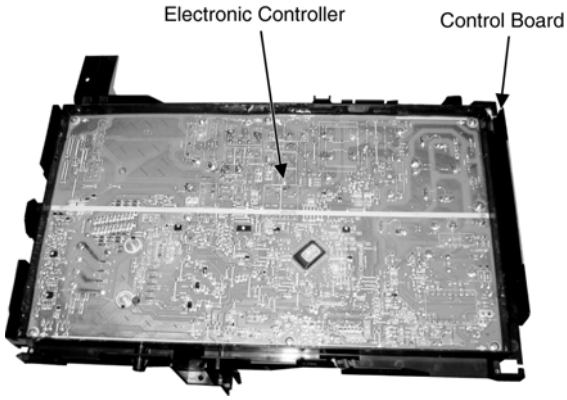

Fig. 6

16 Technical Data

16.1. Operation Characteristics

16.1.1. CS-E9HKEA CU-E9HKEA

• Cooling Characteristic

[Condition] Room temperature: 27/19°C
Operation condition: High fan speed (Rated Frequency)
Piping length: 7.5 m

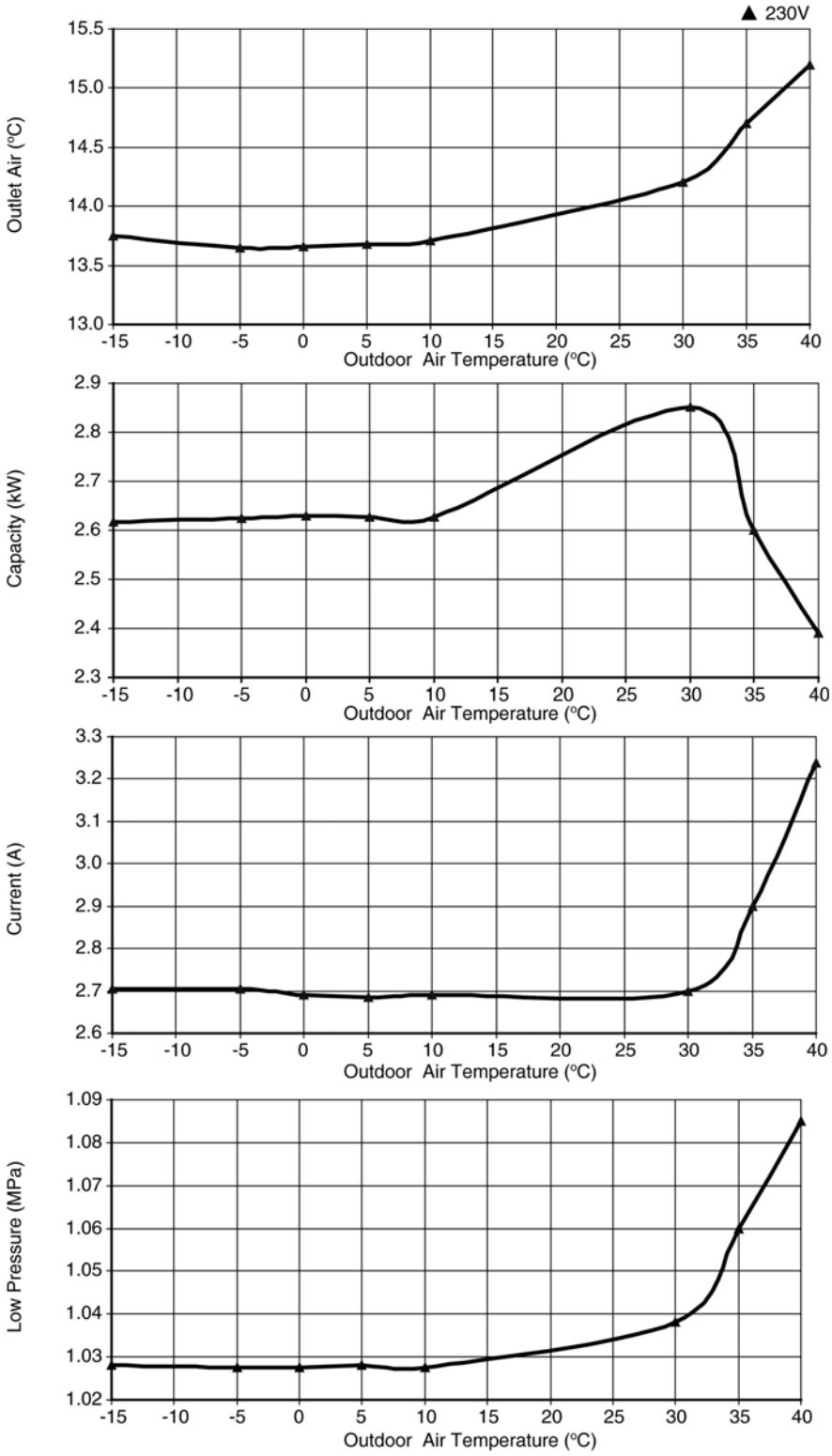

• Piping Length Characteristic

[Condition] Room temperature: 27/19°C
Operation condition: High fan speed (Rated Frequency)
Outdoor temperature: 35/24°C

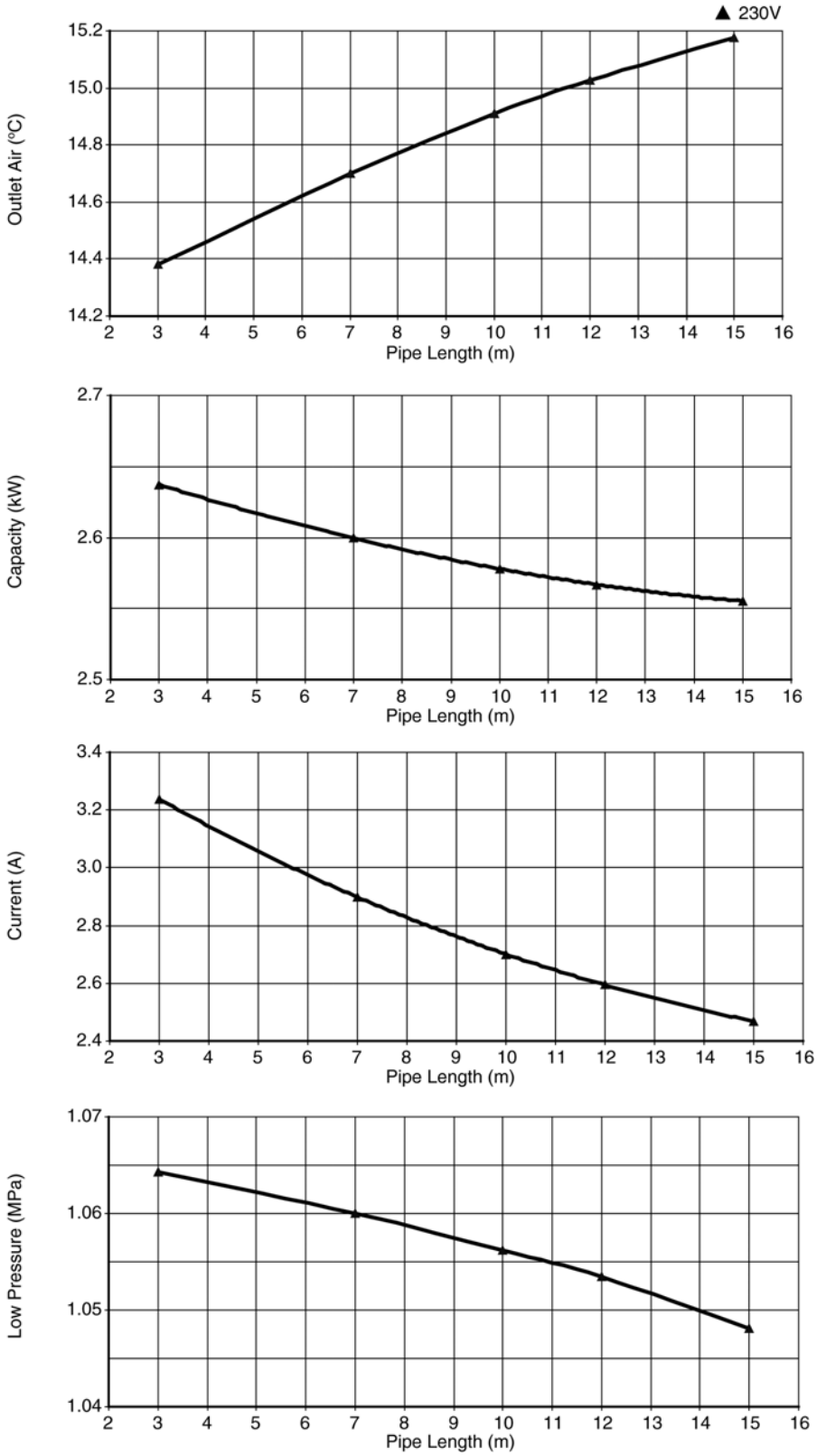

• Heating Characteristic

[Condition] Room temperature: 20/-ºC
Operation condition: High fan speed (Rated Frequency)
Piping length: 7.5 m

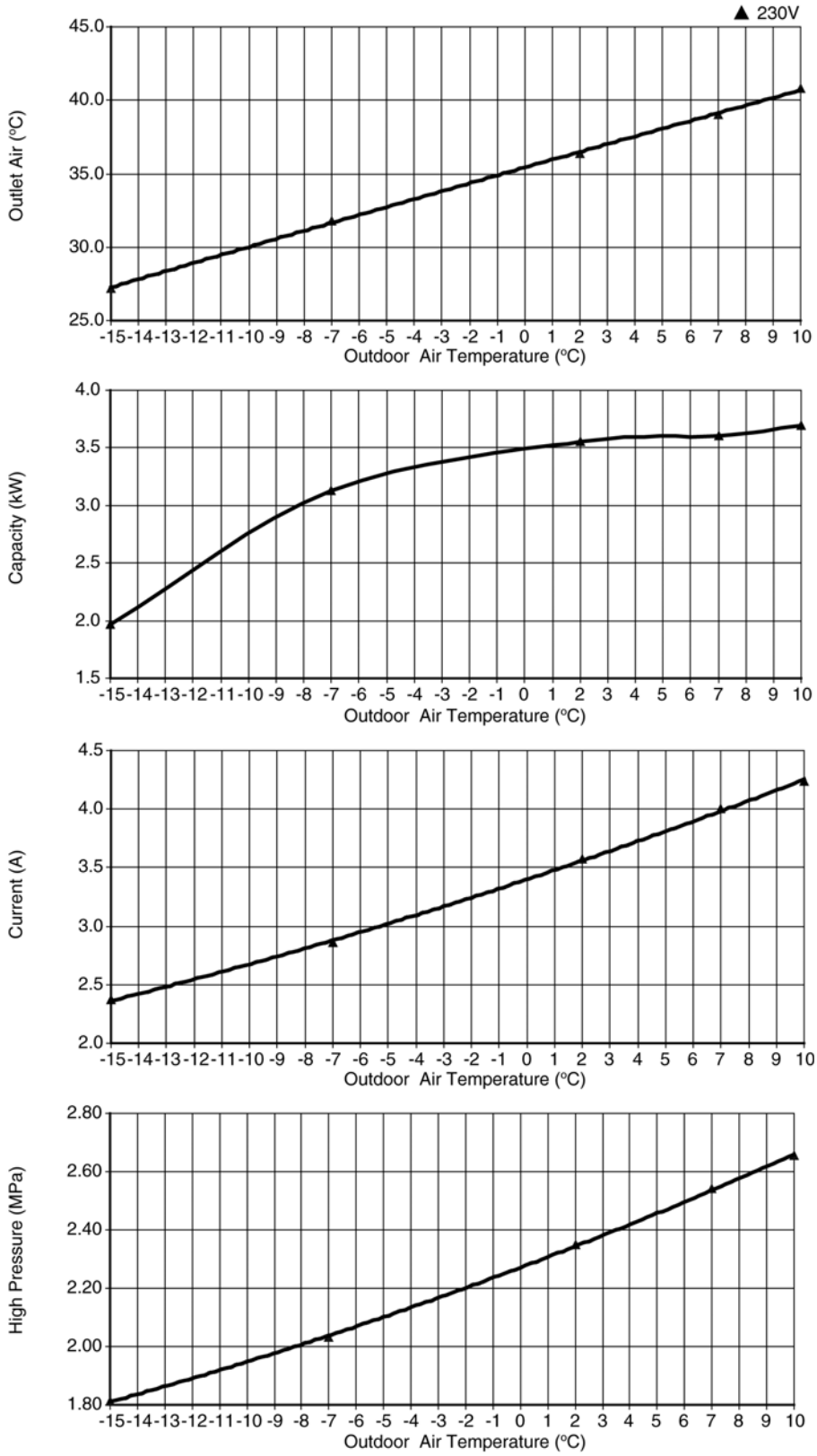

• Piping Length Characteristic

[Condition] Room temperature: 20/-°C
Operation condition: High fan speed (Rated Frequency)
Outdoor temperature: 35/24°C

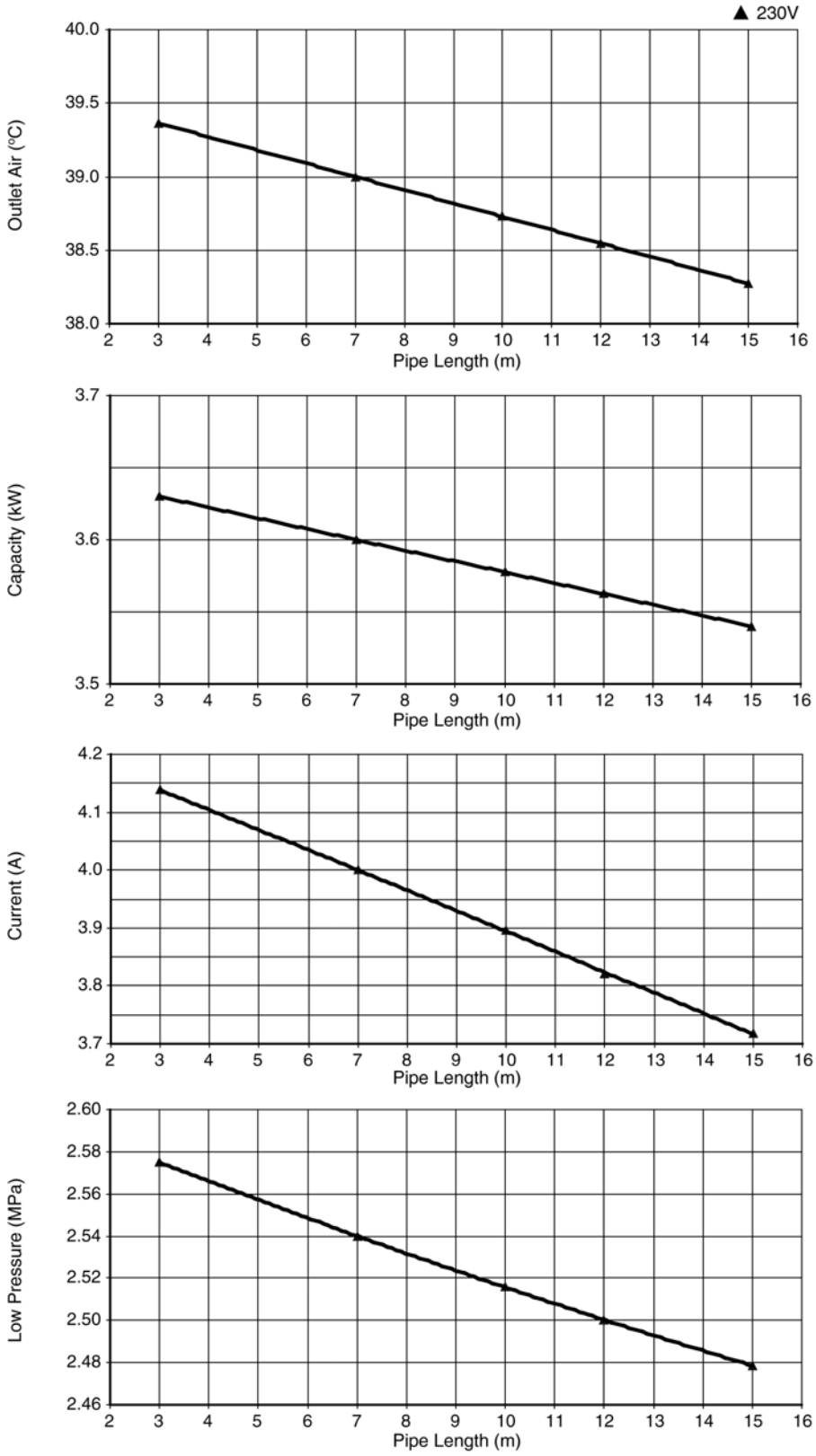

16.1.2. CS-E12HKEA CU-E12HKEA

• Cooling Characteristic

[Condition] Room temperature: 27/19ºC
Operation condition: High fan speed (Rated Frequency)
Piping length: 7.5 m

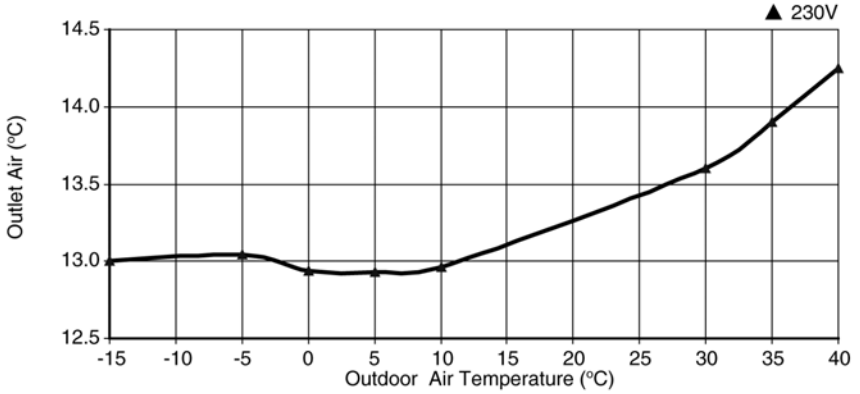

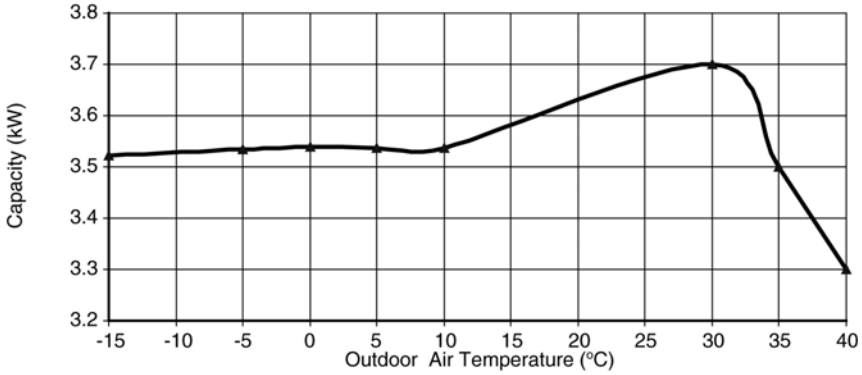

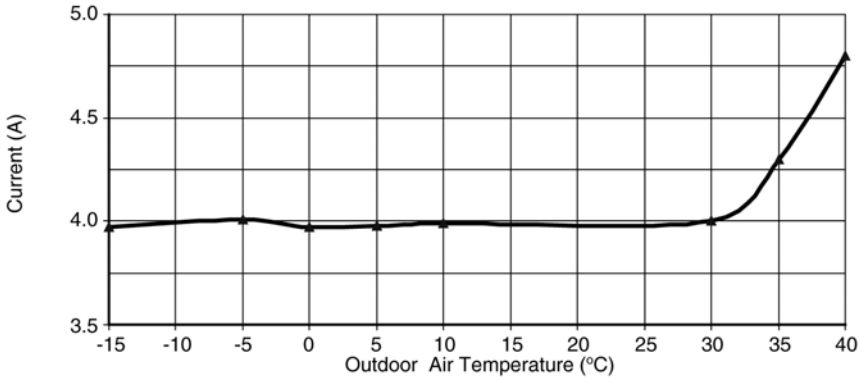

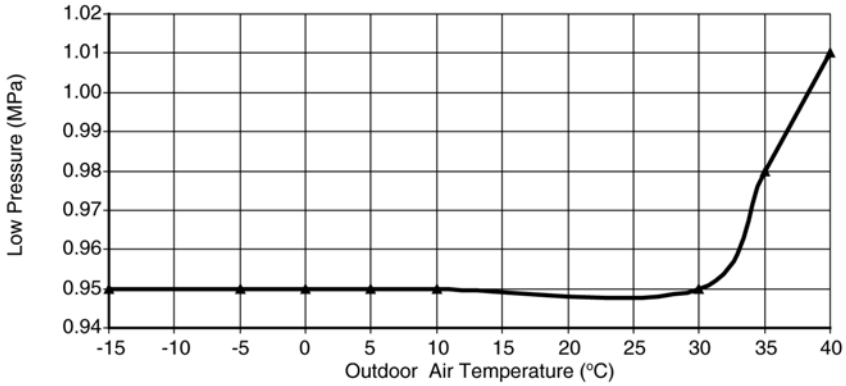

• Piping Length Characteristic

[Condition] Room temperature: 27/19°C
Operation condition: High fan speed (Rated Frequency)
Outdoor temperature: 35/24°C

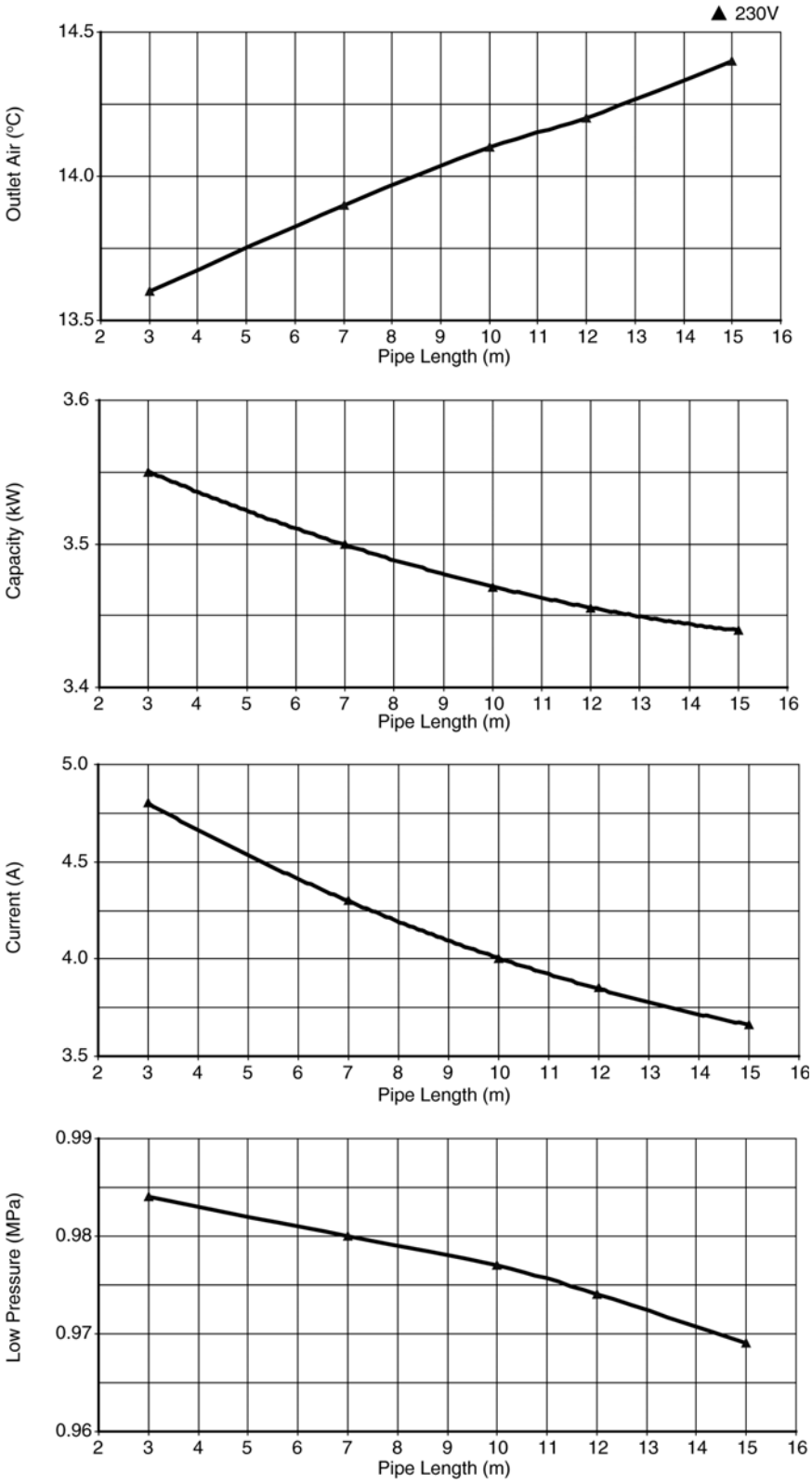

• Heating Characteristic

[Condition] Room temperature: 20/-°C
Operation condition: High fan speed (Rated Frequency)
Piping length: 7.5 m

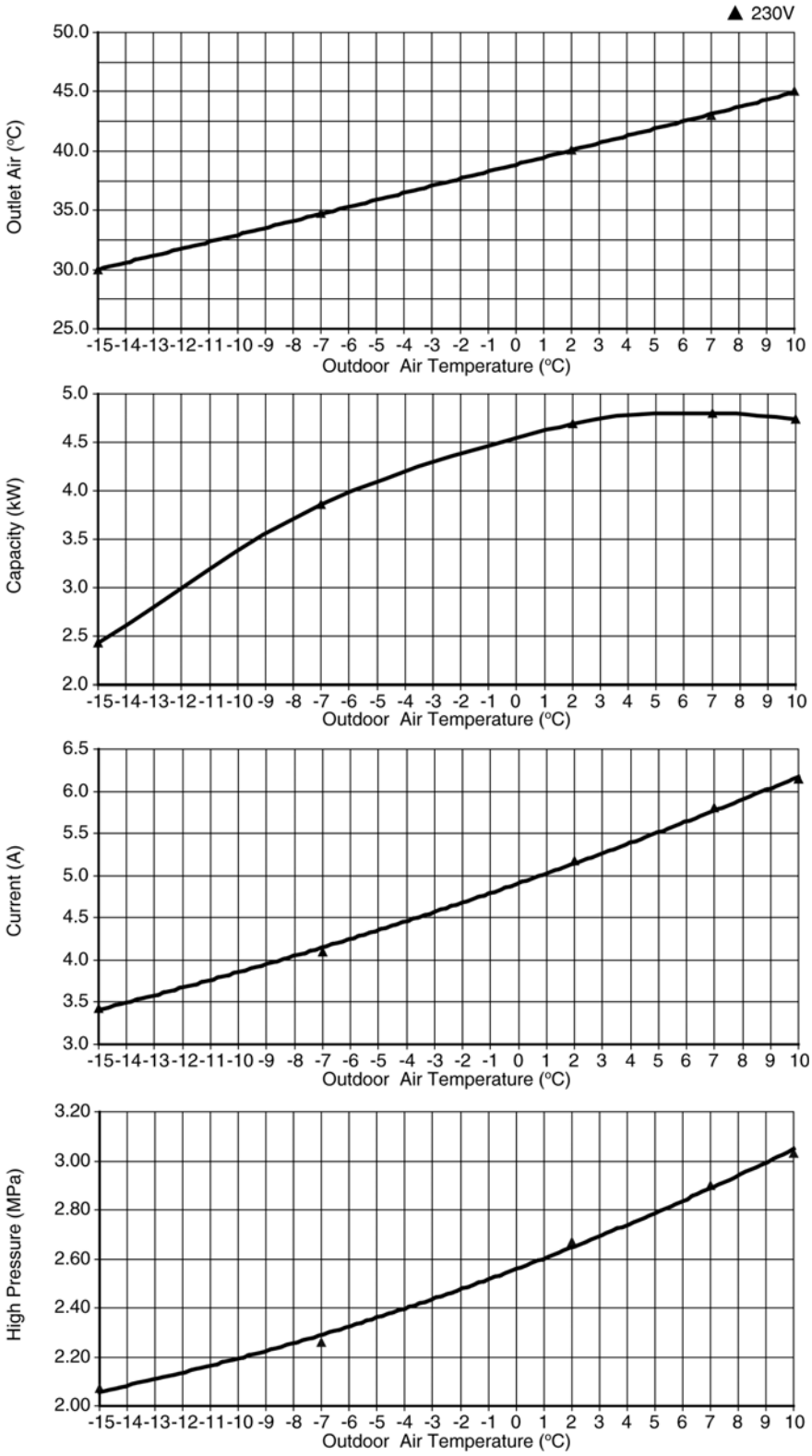

• Piping Length Characteristic

[Condition] Room temperature: 20/-°C
Operation condition: High fan speed (Rated Frequency)
Outdoor temperature: 35/24°C

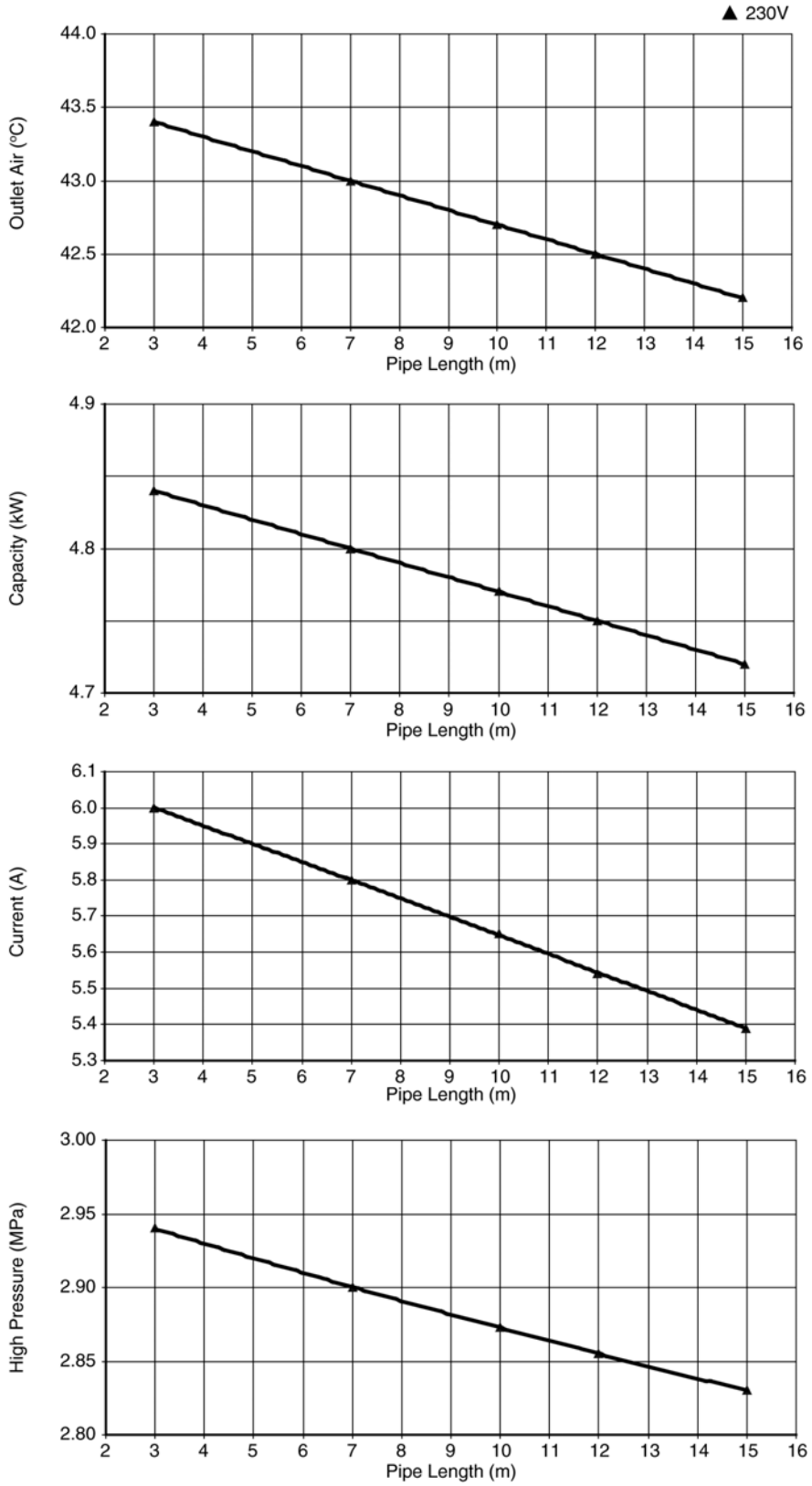

16.2. Sensible Capacity Chart

● **CS-E9HKEA CU-E9HKEA**

230V	Outdoor Temp. (°C)											
Indoor wet bulb temp.	30			35			40			46		
	TC	**SHC**	**IP**	**TC**	**SHC**	**IP**	**TC**	**SHC**	**IP**	**TC**	**SHC**	**IP**
17.0°C	2.58	1.96	0.54	2.41	1.88	0.58	2.24	1.80	0.62	2.04	1.71	0.67
19.0°C				2.60		0.59						
19.5°C	2.83	2.05	0.55	2.65	1.97	0.59	2.46	1.89	0.63	2.24	1.80	0.68
22.0°C	3.09	2.12	0.56	2.88	2.04	0.60	2.68	1.97	0.64	2.44	1.88	0.70

● **CS-E12HKEA CU-E12HKEA**

230V	Outdoor Temp. (°C)											
Indoor wet bulb temp.	30			35			40			46		
	TC	**SHC**	**IP**	**TC**	**SHC**	**IP**	**TC**	**SHC**	**IP**	**TC**	**SHC**	**IP**
17.0°C	3.47	2.63	0.84	3.24	2.52	0.91	3.02	2.43	0.97	2.74	2.30	1.05
19.0°C				3.50		0.92						
19.5°C	3.81	2.76	0.86	3.56	2.65	0.92	3.31	2.55	0.99	3.01	2.43	1.07
22.0°C	4.15	2.86	0.87	3.88	2.75	0.94	3.61	2.65	1.01	3.28	2.53	1.08

TC - Total Cooling Capacity (kW)
SHC - Sensible Heat Capacity (kW)
IP - Input Power (kW)

Indoor 27°C/19°C
Outdoor 35°C/24°C

17 Exploded View and Replacement Parts List

17.1. Indoor Unit

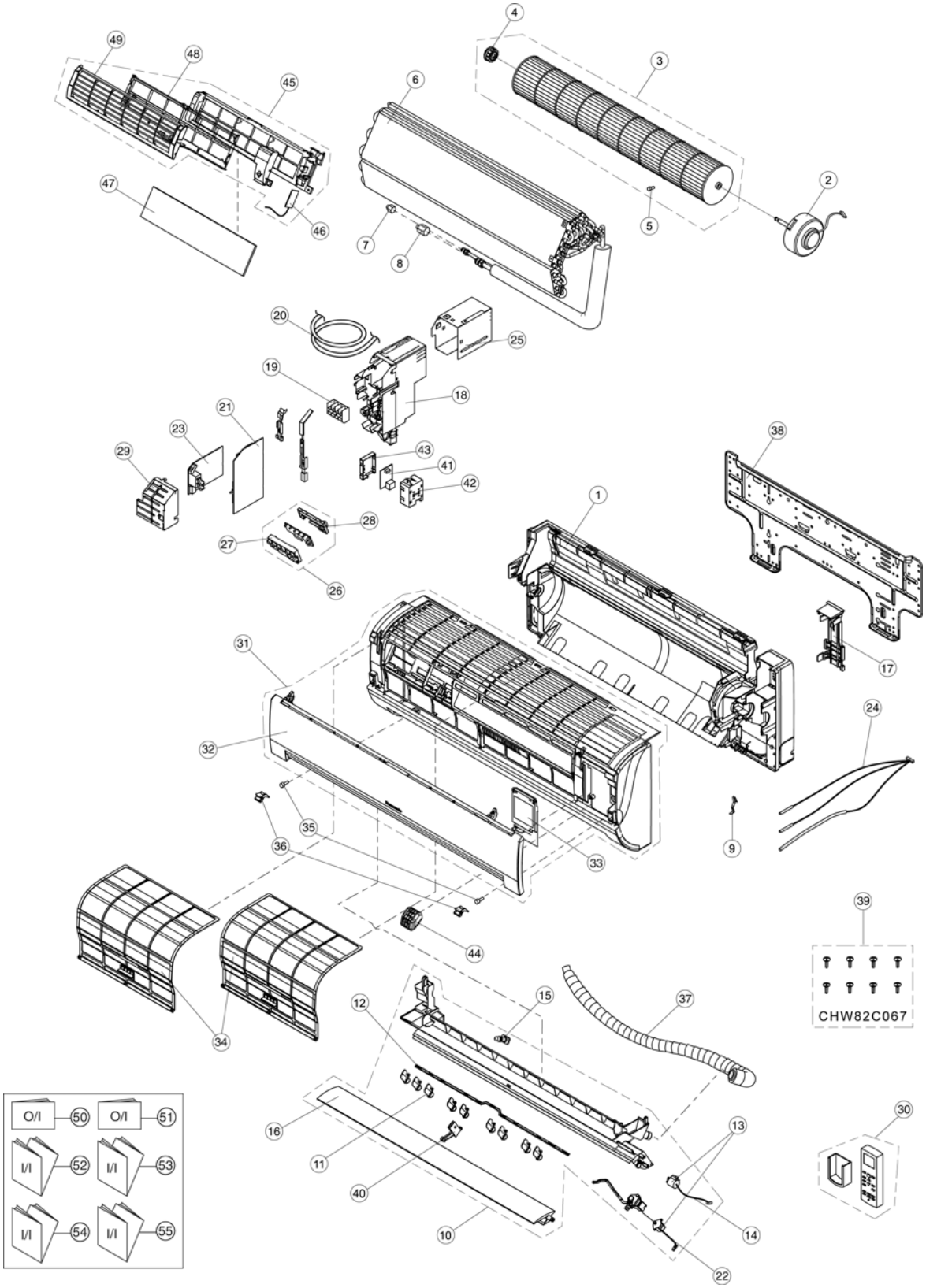

Note

The above exploded view is for the purpose of parts disassembly and replacement.

The non-numbered parts are not kept as standard service parts.

REF. NO.	PART NAME & DESCRIPTION	QTY.	CS-E9HKEA	CS-E12HKEA	REMARKS
1	CHASSY COMPLETE	1	CWD50C1568	←	
2	FAN MOTOR	1	ARW61F8P30AC	←	O
3	CROSS FLOW FAN COMPLETE	1	CWH02C1045	←	
4	BEARING ASSY	1	CWH64K007	←	
5	SCREW - CROSS FLOW FAN	1	CWH551146	←	
6	EVAPORATOR CO.	1	CWB30C2405	CWB30C2406	
7	FLARE NUT (1/4)	1	CWT251030	←	
8	FLARE NUT (3/8) (1/2)	1	CWT251031	CWT251032	
9	CLIP FOR SENSOR	1	CWH32143	←	
10	DISCHARGE GRILLE COMPLETE	1	CWE20C2343	←	
11	VERTICAL VANE	9	CWE241150	←	
12	CONNECTING BAR	1	CWE261072	←	
13	A.S.MOTOR, DC SINGLE 12V 300Ω	2	CWA98260+MJ	←	O
14	LEADWIRE CO - AIR SWING MOTOR	1	CWA67C4445	←	
15	CAP - DRAIN TRAY	1	CWH521096	←	
16	HORIZONTAL VANE	1	CWE241173	←	
17	BACK COVER CHASSIS	1	CWD932454	←	
18	CONTROL BOARD CASING	1	CWH102321	←	
19	TERMINAL BOARD COMPLETE	1	CWA28C2306	←	O
20	P.S CORD COMPLETE	1	CWA20C2587	←	
21	ELECTRONIC CONTROLLER - MAIN	1	CWA73C3230	CWA73C3231	O
22	LEAD WIRE - AIR SWING MOTOR	1	CWA67C3849	←	O
23	ELECTRONIC CONTROLLER - POWER	1	CWA745202	←	
24	SENSOR COMPLETE	1	CWA50C2404	←	O
25	CONTROL BOARD FRONT COVER	1	CWH131207	←	
26	INDICATOR COMPLETE	1	CWE39C1126	←	O
27	INDICATOR HOLDER	1	CWD932429	←	
28	INDICATOR HOLDER	1	CWD932430	←	
29	CONTROL BOARD FRONT COVER CO.	1	CWH13C1171	←	
30	REMOTE CONTROL COMPLETE	1	CWA75C3192	←	O
31	FRONT GRILLE CO.	1	CWE11C3973	←	O
32	INTAKE GRILLE COMPLETE	1	CWE22C1154	←	
33	GRILLE DOOR	1	CWE14C1011	←	
34	AIR FILTER	2	CWD001144	←	
35	SCREW - FRONT GRILLE	2	XTT4+16CFJ	←	
36	CAP - FRONT GRILLE	2	CWH521109	←	
37	DRAIN HOSE	1	CWH851063	←	
38	INSTALLATION PLATE	1	CWH361067	←	
39	BAG COMP. - INSTALLATION SCREW	1	CWH82C067	←	
40	FULCRUM	1	CWH621046	←	
41	ELECTRONIC CONTROLLER - IONIZER	1	CWA743675	CWH91C1013	O
42	CASING - IONIZER	1	CWD932464	CWA743675	
43	CASING - IONIZER	1	CWD932431	CWD00C1133	
44	ION GENERATOR	1	CWH94C0001	←	
45	SUPERSONIC AIR PURIFYING DEVICE	1	CWH91C1013	←	
46	ELEC. CONTROLLER - SUPERSONIC	1	CWA743874	←	O
47	SUPER ALLERU BUSTER FILTER	1	CWD00C1133	←	
48	FRAME FR AIR FILTER SUPERSONIC	1	CWD011026	←	
49	FRAME FR AIR FILTER SUPERSONIC	1	CWD011027	←	
50	OPERATION INSTRUCTION	1	CWF565937	←	
51	OPERATION INSTRUCTION	1	CWF565938	←	
52	INSTALLATION INSTRUCTION	1	CWF613396	←	
53	INSTALLATION INSTRUCTION	1	CWF613397	←	
54	INSTALLATION INSTRUCTION	1	CWF613398	←	

REF. NO.	PART NAME & DESCRIPTION	QTY.	CS-E9HKEA	CS-E12HKEA	REMARKS
55	INSTALLATION INSTRUCTION	1	CWF613399	←	

(NOTE)
- All parts are supplied from PHAAM, Malaysia (Vendor Code: 061).
- “O” marked parts are recommended to be kept in stock.

17.2. Outdoor Unit

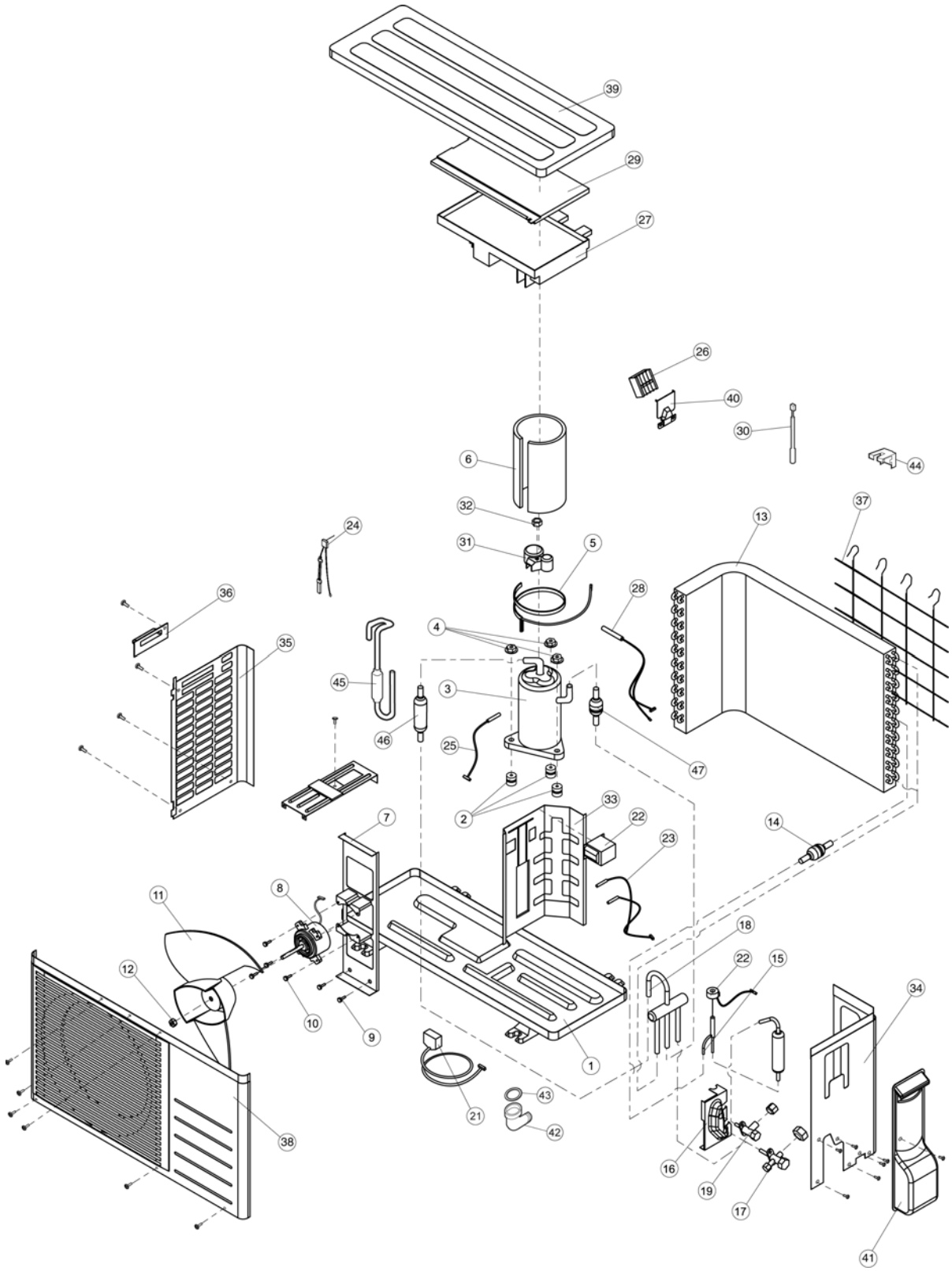

Note
The above exploded view is for the purpose of parts disassembly and replacement.
The non-numbered parts are not kept as standard service parts.

REF. NO.	PART NAME & DESCRIPTION	QTY.	CU-E9HKEA	CU-E12HKEA	REMARKS
1	CHASSY ASSY	1	CWD50K2176	←	
2	ANTI - VIBRATION BUSHING	3	CWH50077	←	
3	COMPRESSOR, DC 220V	1	5CS110XBD04	←	O
4	NUT - COMPRESSOR MOUNT	3	CWH56000J	←	
5	CRANKCASE HEATER	1	CWA341026	←	
6	SOUND PROOF MATERIAL	1	CWMG302466	←	
7	FAN MOTOR BRACKET	1	CWD541089	←	
8	FAN MOTOR, DC 40W 3PH	1	ARW44W8P40AC	←	O
9	SCREW - BRACKET FAN MOTOR	2	CWH551217	←	
10	SCREW - FAN MOTOR MOUNT	4	CWH55252J	←	
11	PROPELLER FAN ASSY	1	CWH03K1014	←	
12	NUT - PROPELLER FAN	1	CWH56053J	←	
13	CONDENSER CO.	1	CWB32C2456	←	
14	STRAINER	1	CWB11094	←	
15	TUBE ASSY CO. (EXP. VALVE)	1	CWT01C3643	←	
16	HOLDER-COUPLING	1	CWH351025	←	
17	3-WAY VALVE	1	CWB011434	CWB011523	O
18	4-WAY VALVE	1	CWB001037J	←	O
19	2-WAY VALVE	1	CWB021333	←	O
21	V-COIL CO. FOR 4-WAY VALVE	1	CWA43C2144J	←	O
22	V-COIL COMPLETE FOR EXP. VALVE	1	CWA43C2058J	←	
23	REACTOR	1	G0C193J00003	G0C193J00004	
24	SENSOR COMPLETE	1	CWA50C2402	←	
25	SENSOR COMPLETE	1	CWA50C2281	←	
26	TERMINAL BOARD ASSY	1	CWA28K1021J	←	
27	ELECTRONIC CONTROLLER - MAIN	1	CWA73C3245R	CWA73C3246R	O
28	OVER HEAT PROTECTOR COMPLETE	1	CWA14C1013	←	
29	CONTROL BOARD COVER	1	CWH131264	←	
30	SENSOR COMPLETE	1	CWA50C2205	←	
31	TERMINAL COVER	1	CWH171039A	←	
32	NUT FOR TERMINAL COVER	1	CWH7080300J	←	
33	SOUND PROOF BOARD	1	CWH151188	←	
34	CABINET SIDE PLATE (R)	1	CWE041279A	←	
35	CABINET SIDE PLATE (L)	1	CWE041248A	←	
36	HANDLE	1	CWE161010	←	
37	WIRE NET	1	CWD041111A	←	
38	CABINET FRONT PLATE CO.	1	CWE06C1136	←	
39	CABINET TOP PLATE	1	CWE031014A	←	
40	CONTROL BOARD COVER	1	CWH131213	←	
41	CONTROL BOARD COVER COMPLETE	1	CWH13C1145	←	
42	L-TUBE	1	CWA5850080	←	
43	PACKING - L-TUBE	1	CWB81012	←	
44	HOLDER SENSOR	1	CWH321023	←	
45	DISCHARGE MUFFLER	1	CWB121021	←	
46	STRAINER	1	CWB111004	←	
47	RECEIVER	1	CWB14011	←	

(NOTE)
- All parts are supplied from PHAAM, Malaysia (Vendor Code: 061).
- “O” marked parts are recommended to be kept in stock.

[PHAAM] Printed in Malaysia
SFTK0801-00