Panasonic

NEW PRODUCTS
2014 - 2015



AQUAREA AIR TO WATER HEAT PUMP



DOMESTIC AIR TO AIR HEAT PUMP



COMMERCIAL AIR TO AIR



VRF SYSTEMS

heatingandcoolingsystems

AQUAREA

AQUAREA AIR TO WATER HEAT PUMP RANGE

Aquarea is a ground breaking low energy system for heating and domestic hot water production: delivering outstanding performance, even at extreme outdoor temperatures.

NEW

New All in One solution from 3 to 16kW with 200l tank, A class pump and small foot print. Ideal for new and retrofit homes.



NEW

New 5kW Monobloc, the most efficient solution of the market with a COP of 5.08! Ideal for low consumption homes.



NEW

New 16kW T-Cap Bi-Bloc, ideal for retrofit and commercial applications.



NEW

New 9 and 12kW T-Cap Bi-Bloc, with A class pump, higher efficiency, and energy consumption.



NEW

New remote control to improve performance, comfort and to deliver maximum energy savings.



NEW

New, square-chassis hot water tank, with integral 80-litre buffer tank.



DOMESTIC

DOMESTIC RANGE

Panasonic has developed a range of domestic products designed for you and your clients.

NEW

New Etherea, A++/A++, the best efficiency, the best design, the best air quality!



NEW

Anti-allergy Nanoe-G tested by the UK Allergy Association! Get the best for your health with Etherea and Nanoe-G.



NEW

New RE wall mounted, excellent seasonal efficiency A++/A+, new design.



NEW

R22 Renewal. All Panasonic standard NKE, PKE and QKE units can be install on existing R22 pipings



COMMERCIAL

COMMERCIAL RANGE

The commercial range is constantly expanding so that you can always offer your clients the best solutions: high performance, silent machines and a complete range of ducts, cassettes and ceiling installations.

NEW

PACi Elite line up.
With energy display function and demand control function.



NEW

New Econavi for PACi! Analyses activity of the room and modifies the capacity to adapt in real time to the needs of the room.



NEW

New 10kW Wall mounted.
More efficiency, more capacity.



NEW

New Remote Controller touch screen with power consumption monitor.



NEW

New Server room controller.
Control up to 3 indoor units: Redundancy, Backup, alternative run, error manage.

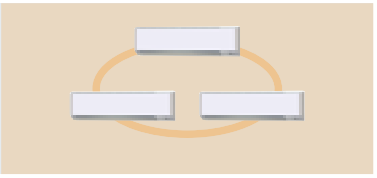

VRF

VRF SYSTEMS

The VRF industrial range considerably improves efficiency so even large buildings can benefit from a high-level of comfort with less energy consumption.

NEW

The new 1,5kW indoor units is the perfect solution for small rooms or low consumption buildings requiring low energy to heat or cool the space.

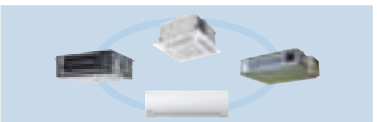

NEW

New Remote Controller touch screen with power consumption monitor.



NEW

New Econavi for ECOi. The Econavi Sensor system tracks occupancy and room activity to reduce - or even stop - energy consumption.



NEW

New Refrigerant Pump Down System. Complete solution to ensure: compliance with EN378/2008; safety for building occupiers and environment.



NEW

New indoor unit Hotel Remote control which integrates direct connection to: Card switch, lighting, Window contact and blinds.



NEW

GHP + WHE heating, cooling and DHW.
The ECO G the efficient solution for gas boiler replacement.



NEW

New Heat Recovery with DX coil with purifying system Bioxigen®. Increase efficiency of the installation while renewing the air.



SUMMARY





EDITORIAL

The desire to advance has made Panasonic the international leader in air conditioning. Our industrial capabilities and firm commitment to the environment enable us to open new avenues of research and to develop innovative technologies which can enhance today's way of life.

8 HISTORY OF AIR CONDITIONING GROUP
9 PANASONIC – LEADING THE WAY IN HEATING & COOLING
10 RELIABILITY FACTS: RELIABLE COMFORT COMES FROM RELIABLE TECHNOLOGIES
12 PANASONIC EUROPE ANNOUNCES SUSTAINABILITY DECLARATION
13 EXEMPLARY SUSTAINABLE PROJECTS
14 PRO CLUB: THE PROFESSIONAL WEBSITE OF PANASONIC

AQUAREA AIR TO WATER HEAT PUMP

Panasonic's new Aquarea system, based on high-efficiency heat pump technology, not only heats your home and hot water, but also cools your home in summer with incredible operating performance. This creates perfect comfort whatever the weather conditions, even at outdoor temperatures as low as -20°C. Panasonic new heat pumps are designed in response to the new demand for low consumption housing, with high efficiency and low running costs.

16 NEW AQUAREA AIR TO WATER HEAT PUMP
18 AQUAREA THE BEST SEASONAL EFFICIENCY
20 PANASONIC HAS DESIGNED A COMPLETELY NEW LINE-UP TO OFFER THE BEST TO OUR CUSTOMERS
21 THREE AQUAREA SOLUTIONS
22 NEW HIGH PERFORMANCE FOR LOW CONSUMPTION HOMES.
22 NEW HIGH PERFORMANCE HELPS YOU TO MEET STRICT BUILDING REQUIREMENTS AND REDUCE BUILDING COSTS
24 NEW T-CAP FOR EXTREMELY LOW TEMPERATURES. INSTALL A CLASS PUMP: INDUSTRY TOP CLASS ENERGY-SAVING!
26 AQUAREA HT IDEAL FOR RETROFIT: GREEN ENERGY SOURCE WORKS WITH EXISTING RADIATORS
27 PANASONIC AQUAREA HT IS SUPER EFFICIENT EVEN AT LOW TEMPERATURE
28 AQUAREA COMMERCIAL SOLUTIONS FOR BEST SAVINGS
29 BY FLEXIBLE WITH YOUR WATER SYSTEM
30 NEW ALL IN ONE
32 NEW REMOTE CONTROL. NEW FEATURES
33 NEW INDOOR UNIT DESIGN
34 HEAT AND PRODUCE DOMESTIC HOT WATER FOR FREE
36 CONTROL & CONNECTIVITY
38 CONTROL YOUR HEAT PUMP FROM WHEREVER YOU ARE
39 CONNECTIVITY: GREAT FLEXIBILITY FOR INTEGRATION INTO YOUR KNX / ZIG BEE / MODBUS PROJECTS
40 AQUAREA DESIGNER
42 AQUAREA LINE-UP!
44 AQUAREA ALL IN ONE HIGH PERFORMANCE BI-BLOC SINGLE PHASE HEATING AND COOLING
45 AQUAREA ALL IN ONE T-CAP BI-BLOC SINGLE PHASE / THREE PHASE HEATING AND COOLING
46 AQUAREA HIGH PERFORMANCE BI-BLOC SINGLE PHASE HEATING ONLY - SDF / HEATING AND COOLING - SDC / 3 AND 5KW
47 AQUAREA HIGH PERFORMANCE BI-BLOC SINGLE PHASE / THREE PHASE HEATING AND COOLING - SDC
48 AQUAREA T-CAP BI-BLOC SINGLE PHASE / THREE PHASE HEATING AND COOLING - SXC
49 AQUAREA HT BI-BLOC SINGLE PHASE / THREE PHASE HEATING ONLY - SHF
50 AQUAREA HIGH PERFORMANCE MONO-BLOC SINGLE PHASE HEATING ONLY - MDF / HEATING AND COOLING - MDC
51 AQUAREA HIGH PERFORMANCE MONO-BLOC SINGLE PHASE / THREE PHASE HEATING ONLY - MDF / HEATING AND COOLING - MDC
52 AQUAREA T-CAP MONO-BLOC SINGLE PHASE / THREE PHASE HEATING ONLY - MXF / HEATING AND COOLING - MXC
53 AQUAREA HT MONO-BLOC SINGLE PHASE / THREE PHASE HEATING ONLY - MHF
54 AQUAREA AIR RADIATORS
56 ACCESSORIES
58 EXAMPLES OF INSTALLATIONS WITH AQUAREA MANAGER
60 A TYPICAL EXAMPLE OF SAVINGS AND EFFICIENCIES THAT AQUAREA CAN OFFER TO YOU
62 HEATING CAPACITY TABLE BASED ON OUTLET TEMPERATURE AND OUTSIDE TEMPERATURE
71 ERROR CODES
72 DIMENSIONS

DOMESTIC AIR TO AIR HEAT PUMP

With its innovative design, high efficiency and incomparable purification system, the Etherea range has been designed with your clients in mind. Above all, it is also a range for air conditioning professionals, such as yourself, thanks to its broad range of products which are capable of conditioning rooms of all sizes – always with optimal efficiency and incomparable ease of installation. The Etherea range guarantees that you are offering your clients the very best.

74 WELCOME TO NEW DOMESTIC RANGE
76 HEATCHARGE AND ETHEREA. ECONOMICAL, ENVIRONMENT-FRIENDLY OPERATION HIGH SCOP (SEASONAL COEFFICIENCY OF PERFORMANCE)
78 NEW PANASONIC R2 ROTARY COMPRESSOR
80 ECONAVI. DISCOVER HOW TO ACHIEVE ENERGY SAVINGS
86 NANOE-G. PURIFIES THE AIR, SURFACES AND EVEN INSIDE ITSELF
88 PANASONIC TECHNOLOGY FOR COMFORT
90 THE NEW HEATCHARGE HEATING POWER AND EFFICIENCY
92 CONTROL YOUR AIR CONDITIONING FROM WHEREVER YOU ARE. CONTROL YOUR COMFORT AND EFFICIENCY WITH THE LOWEST ENERGY CONSUMPTION
93 CONNECTIVITY: GREAT FLEXIBILITY FOR INTEGRATION INTO YOUR INTESISHOME, KNX, ENOCEAN, MODBUS AND BACNET PROJECTS
94 R22 RENEWAL
96 DOMESTIC AIR CONDITIONER RANGE
98 FEATURES EXPLAINED
99 FEATURE COMPARISON
100 WALL MOUNTED VE INVERTER+ ENERGY CHARGE SYSTEM
102 WALL MOUNTED ETHEREA INVERTER+ SILVER PLATED / WHITE
104 WALL MOUNTED ETHEREA INVERTER+ SILVER PLATED / WHITE
106 WALL MOUNTED RE TYPE STANDARD INVERTER
108 WALL MOUNTED UE TYPE STANDARD INVERTER
110 WALL MOUNTED YE TYPE STANDARD INVERTER
112 FLOOR CONSOLE TYPE INVERTER+
114 4 WAY 60x60 CASSETTE INVERTER
116 LOW STATIC PRESSURE HIDE AWAY INVERTER
118 MRE WALL MOUNTED 2x1 STANDARD INVERTER
120 ETHEREA MULTI SPLIT 2x1 INVERTER+
122 ETHEREA MULTI SPLIT 2x1 INVERTER+
124 ETHEREA MULTI SPLIT 3x1 INVERTER+
126 ETHEREA MULTI SPLIT 4x1 AND 5x1 INVERTER+
128 FREE MULTI SYSTEM
130 INDOOR UNITS FOR FREE MULTI COMBINATIONS
131 OUTDOOR UNITS FOR FREE MULTI COMBINATIONS
132 FREE MULTI COMBINATIONS TABLE

CE

EUROVENT CERTIFIED PERFORMANCE www.eurovent-certification.com

Quality Management System Certificate

Certified to ISO 9001: 2008
Panasonic Appliances Air-Conditioning Malaysia. Sdn.Bhd.
Cert. No.: MY-AR 1010

Certified to ISO 9001: 2008
Panasonic Appliances Air-Conditioning (GuangZhou) Co., Ltd.
Registration Number: 01209Q20645R5L

Environmental Management System Certificate

Certified to ISO 14001: 2004
Panasonic Appliances Air-Conditioning Malaysia Sdn.Bhd.
Cert. No.: MY-ER0112

Certified to ISO 14001: 2004
Panasonic Appliances Air-Conditioning (GuangZhou) Co., Ltd.
Registration Number: 02110E10562R4L



COMMERCIAL AIR TO AIR

Panasonic has developed an impressive range of highly efficient Commercial Air Conditioners. This range confirms our commitment to the environment. Our Inverter compressors optimise performance and thus reduce energy costs.



VRF SYSTEMS

Professional solutions for all types of projects. The new Panasonic VRF system is specifically designed for energy saving, easy installation and high efficiency performance, with a wide choice of outdoor and indoor unit models and unique features which are designed for the most demanding offices and big buildings. Panasonic VRF Systems: ECOi (Mini ECOi VRF, 2-Pipe ECOi 6N series and 3-Pipe ECOi MF2 series), ECO G and FS Multi VRF.

150 WELCOME TO THE COMMERCIAL RANGE
152 PACi STANDARD AND PACi ELITE
154 PACi STANDARD AND PACi ELITE: OUTDOOR UNIT
156 SOLUTIONS FOR SERVER ROOMS
158 NEW WIRED REMOTE CONTROLLER WITH ECONAVI FUNCTION CONTROL
160 NEW ECONAVI SENSOR
162 PACi STANDARD AND ELITE: INDOOR UNITS
166 RANGE OF COMMERCIAL UNITS
168 WALL MOUNTED PKEA
170 WALL MOUNTED PACi STANDARD AND ELITE INVERTER+
172 4 WAY 60x60 CASSETTE PACi STANDARD AND ELITE INVERTER+
174 4 WAY 90X90 CASSETTE PACi STANDARD AND ELITE INVERTER+
176 LOW STATIC PRESSURE HIDE AWAY PACi STANDARD AND ELITE INVERTER+
178 HIGH STATIC PRESSURE HIDE AWAY PACi STANDARD AND ELITE INVERTER+
180 CEILING PACi STANDARD AND ELITE INVERTER+
182 HIGH STATIC PRESSURE HIDE AWAY 20-25kW BIG PACi INVERTER+
184 PACi TWIN, TRIPLE AND DOUBLE-TWIN SYSTEM
188 ELECTRIC AIR CURTAIN
190 AIR CURTAIN WITH DX COIL
194 AIR HANDLING UNIT KIT 10-25 kW FOR PACi
197 CONTROL SYSTEMS FOR PACi, ECOi AND ECO G
198 INTERNET CONTROL. CONTROL YOUR AIR CONDITIONING SYSTEM WITH YOUR SMART DEVICE -SMARTPHONE & INTERNET FOR PACi
199 PACi CONNECTIVITY. EASY CONNECTION TO KNX, MODBUS, LONWORKS AND BACNET
200 PACi, ECOi AND ECO G CONNECTIVITY INDOOR UNITS
202 R22 RENEWAL
205 CONTROL EQUIPMENT EXTERNAL DIMENSIONS
206 PKEA DIMENSIONS
207 PACi STANDARD AND ELITE DIMENSIONS

216 PANASONIC INDUSTRIAL VRF SYSTEMS
218 PANASONIC IS DEFINITELY THE MOST EFFICIENT SYSTEM THROUGHOUT THE YEARS
220 YOUR ENTIRE HOTEL WITH MAXIMUM SAVINGS, MAXIMUM CONTROL AND MAXIMUM COMFORT
222 NEW INNOVATIVE SOLUTIONS FOR RETAIL
224 NEW WIRED REMOTE CONTROLLER WITH ECONAVI FUNCTION CONTROL
226 NEW ECONAVI SENSOR
228 NEW PANASONIC PUMP DOWN SYSTEM
230 BEST EFFICIENCY ECOi SERIES FROM PANASONIC
232 2-PIPE MINI ECOi LE1 SERIES
238 2-PIPE ECOi 6N SERIES. HIGH-EFFICIENCY AND LARGE-CAPACITY VRF SYSTEM
256 3-PIPE ECOi MF2 6N SERIES
266 PANASONIC INTRODUCING THE GAS DRIVEN VRF
268 ECO G OUTDOOR UNITS RANGE
269 ECO G TECHNOLOGY
272 ECO G WATER HEAT EXCHANGER FOR HYDRONIC APPLICATIONS
274 ECO G HIGH POWER
276 ECO G AND ECO G MULTI
278 ECO G 3 WAY
280 THE PANASONIC SOLUTION FOR CHILLED AND HOT WATER PRODUCTION!
282 ECOi 2-PIPE WITH WATER HEAT EXCHANGER FOR CHILLED AND HOT WATER PRODUCTION
284 GHP + WHE HEATING, COOLING AND DHW
286 ECO G WITH WATER HEAT EXCHANGER FOR CHILLED AND HOT WATER PRODUCTION
288 AQUAREA AIR RADIATORS
290 FEATURES
291 PANASONIC'S SOFTWARE
292 INDOOR UNITS FOR ECOi AND ECO G
294 ECOi AND ECO G SYSTEMS INDOOR UNITS RANGE
296 U1 TYPE 4 WAY 90x90 CASSETTE SEMI CONCEALED CASSETTE
297 Y2 TYPE 4 WAY 60x60 CASSETTE MINI SEMI CONCEALED CASSETTE
298 L1 TYPE 2 WAY CASSETTE
299 D1 TYPE 1 WAY CASSETTE
300 F2 TYPE VARIABLE STATIC PRESSURE HIDE AWAY
301 M1 TYPE SLIM VARIABLE STATIC PRESSURE HIDE AWAY CONCEALED DUCT
302 E2 TYPE HIGH STATIC PRESSURE HIDE AWAY
303 HEAT RECOVERY
304 T2 TYPE CEILING
305 K2/K1 TYPE WALL MOUNTED

306 P1 TYPE FLOOR STANDING
307 R1 TYPE CONCEALED FLOOR STANDING
308 PANASONIC VENTILATION SOLUTIONS
310 AIR HANDLING UNIT KIT
314 AIR CURTAIN WITH DX COIL
318 ENERGY RECOVERY VENTILATOR
323 CONTROL SYSTEMS FOR ECOi, ECO G AND PACi
324 NEW CONTROL FOR HOTEL APPLICATION: NICE, EASY AND COST EFFECTIVE!
326 INDIVIDUAL CONTROL SYSTEMS
328 CENTRALISED CONTROL SYSTEMS
335 INTERNET CONTROL. CONTROL YOUR AIR CONDITIONING SYSTEM WITH YOUR SMART DEVICE -SMARTPHONE & INTERNET FOR VRF SYSTEMS
336 ECOi AND GHP CONNECTIVITY. NEW PLUG AND PLAY INTERFACE CONNECTED DIRECTLY TO THE P-LINK
338 ECOi, ECO G AND PACi CONNECTIVITY INDOOR UNITS
340 R22 RENEWAL
342 BRANCHES
346 HEADERS
347 CONTROL EQUIPMENT EXTERNAL DIMENSIONS
348 ECOi AND ECO G INDOOR UNITS DIMENSIONS
358 FS MULTI VRF FROM PANASONIC
360 FS MULTI OUTDOOR UNITS
364 FS MULTI CONNECTIVITY. INCREASED FLEXIBILITY FOR INTEGRATION INTO YOUR PROJECTS
365 FS MULTI INDIVIDUAL CONTROL SYSTEMS
367 R410A BRANCH PIPE KITS
368 RANGE OF FS MULTI VRF UNITS
370 FEATURE COMPARISON
372 5 AND 6 HP OUTDOOR UNITS
374 8 AND 10 HP OUTDOOR UNITS
376 FS MULTI INDOOR UNITS
378 WALL MOUNTED TYPE SILVER
379 WALL MOUNTED TYPE WHITE - ALSO AVAILALBE IN WIDE OPTION
380 4 WAY 60x60 CASSETTE
381 4 WAY 90x90 CASSETTE
382 LOW-SILHOUETTE DUCT TYPE LOW STATIC PRESSURE
383 LOW-SILHOUETTE DUCT TYPE MID STATIC PRESSURE
384 DIMENSIONS

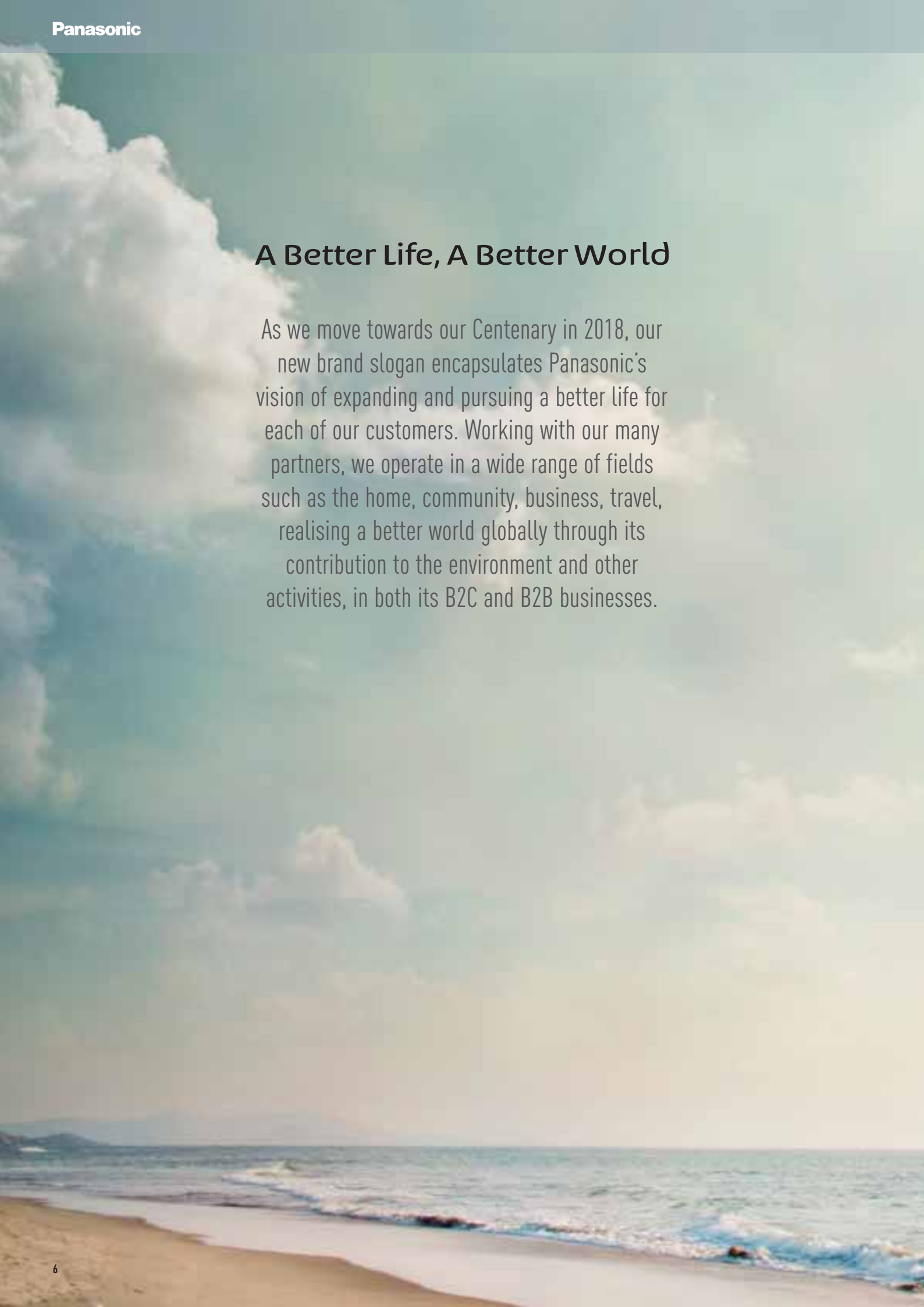

A Better Life, A Better World

As we move towards our Centenary in 2018, our new brand slogan encapsulates Panasonic's vision of expanding and pursuing a better life for each of our customers. Working with our many partners, we operate in a wide range of fields such as the home, community, business, travel, realising a better world globally through its contribution to the environment and other activities, in both its B2C and B2B businesses.









History of Air Conditioning Group

Panasonic starts with a desire to create things of value. As hard work and dedication results in one innovative product after another, the fledgling company takes its first steps towards becoming the electronics giant of today.





1936
First electric Fan with Automatic Oscillation (36 cm table top model).



1958
First room air conditioner launched for domestic installation.
Prior to this date, air conditioners were large and only for commercial use.
Panasonic developed the first compact air conditioner for windows; it was lightweight and easy to install, improving the quality of life in Japanese homes.
1,100 units were sold in Japan in the first year, and just two years later, in 1960, this figure rose to 230,000.



1973
Panasonic launches the first highly efficient air-to-water heat pump in Japan.



1975
Panasonic becomes the first Japanese air conditioner manufacturer in Europe.

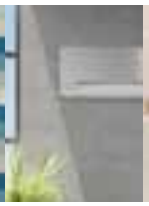

2008
Etherea new concept of air conditioning systems: high efficiency and high performances with a great design. Etherea also includes a very innovative air quality sensor and air purifier in order to enjoy healthy air at home at all times.

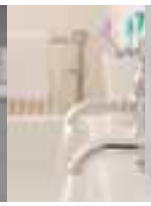

2010
New Aquarea.
Panasonic has created Aquarea, an innovative new, low-energy system, designed to help you enjoy ideal temperatures and hot water in your home, even with extreme outdoor temperatures. Aquarea cools or heats to ensure maximum comfort. Aquarea is far cleaner, safer, cheaper and environmentally friendly than alternatives using gas, oil and other electrical systems.



2011
New Eco i VRF solution.
The new Panasonic VRF solution for big buildings is the most efficient in the industry in more than 74% of combinations. ECO i satisfies the most demanding standards required by design offices, architects, owners and installers.



2012
New GHP units.
Pansonic's gas-driven VRF systems are ideal for projects where power restrictions apply. In 2012, Panasonic extends the Gas Heat Pump range with a new GHP line-up, new GHP G Power (electricity production) and the new Chiller Units.



2013
New ECOi 3-pipes.
The best efficiency for your building.
Our New 6 Series 3-pipes is achieving a COP of 4.77 at full load, and even more when recovering heat from the building.
There is no doubt, Panasonic is reducing environmental impact!



2014
New Aquarea 16kW T-CAP. Improvements deliver impressive, high efficiencies at low ambient temperatures. T-CAP stands for Total Capacity and is capable of maintaining the same nominal capacity even at -15°C without the help of an electric booster heater. Ideal for retrofit and commercial applications.



Panasonic – leading the way in Heating & Cooling

With more than 30 years of experience, selling to more than 120 countries around the world, Panasonic is unquestionably one of the leaders in the heating and cooling sector.
With a diverse network of production and R&D facilities, Panasonic delivers innovative products incorporating cutting-edge technologies that set the standard for air conditioners worldwide.
Expanding globally, Panasonic provides superior international products transcending borders.

100% Panasonic: we control the process

The company is also a world leader in innovation as it has filed more than 91,539 patents to improve its customers' lives. Moreover, Panasonic is determined to remain at the forefront of its market. In all, the company has produced more than 200 million compressors and its products are manufactured in 294 plants which are located all over the world. You can be assured of the extremely high quality of Panasonic's heat pumps.
This wish to excel has made Panasonic the international leader in heating and turn-key air conditioning solutions for homes, medium-sized buildings such as offices and restaurants, and large-scale buildings. These offer maximum effectiveness, comply with the strictest environmental standards and meet the most avant-garde construction requirements of our time.
At Panasonic we know what a great responsibility it is to install heating and cooling systems. Because offering you the best solutions in heating and cooling matters



RELIABILITY FACTS

Reliable comfort comes from reliable technologies

Today, Panasonic air conditioners have earned widespread acclaim throughout the world.
A rugged design ensures that the air conditioner will continue to keep the room comfortable, and operate trouble-free for many years. Panasonic believes this is the true value of an air conditioner. And this is why we subject them to a wide range of stringent tests.

Durability. Long Time Continuous Operation Simulation.



Long-term Durability Test
The air conditioner's main mission is to provide a level of durability that allows it to operate stably for years. In order to achieve this, we conduct an accelerated test for 10,000 hours of continuous operation. The results of this test, which is conducted under conditions that are much more severe than actual operating conditions, prove the rugged strength of Panasonic air conditioners.



Compressor Disassembly Test
After a test with 10,000 hours of continuous operation, we remove the compressor from a randomly selected outdoor unit, disassemble it, then examine the internal mechanisms and parts for possible failure. Panasonic air conditioners continue to provide their designed performance for many years even after prolonged operation under harsh conditions.



Operating Test in Harsh Conditions
In addition to normal operating conditions, an operating durability test is conducted in a high-temperature, high humidity test chamber at a temperature of 55°C. For use in cold climates, the test is also conducted in a low temperature test chamber at -20°C. This test assures that the oil inside the compressor will not freeze during use and interrupt operation.



Checking the oil inside the compressor under extremely cold conditions.



Waterproof Test
The outdoor unit, which is subject to rain and wind, is provided with IPX4 waterproof compliance.
Contact sections on printed circuit boards are also resin-potted to prevent adverse effects caused by an unlikely exposure to droplets of water.



A resin-potted circuit board.



Shock Resistance

Panasonic simulates impacts, vibrations and other environmental conditions that air conditioners might be subjected to during transport. We promise that the quality and performance at the time of the final product inspection are unchanged when the product reaches the user's home.

No Breaking. When Dropped onto Sides or Corners.





Drop Test
Even with the large impacts that may occur due to improper handling during transportation, the product packaging has been strengthened to prevent it from being damaged. In addition to conventional vertical dropping, more severe conditions in which the sides or corners hit the floor first are carefully tested to ensure that the product's rigidity and shock-absorbing materials work to prevent problems.



Vibration Test
Preventing damage that would hinder the product's performance due to vibration during transport is a major role of the packaging. Panasonic confirms that the product operates properly even after applying vibrations in both horizontal and vertical directions.



Warehouse Storage Test
During distribution, products may be subjected to extended warehouse storage under unfavourable conditions. To simulate these conditions, we place a weight equal to a stack of five product packages on top of the test package, and leave it in that condition in a room at a temperature of 27°C and a humidity level of 85%. Then, the product is checked for proper operation.



Comfort

Air conditioners should keep each person in the room comfortable without making their presence known. They should work totally in the background, using their strength to create and maintain a relaxing environment. We build this hidden strength into our air conditioners, and test them repeatedly from this viewpoint.

Silence. That Does Not Disturb You.



Noise Test
The operating noise of the indoor and outdoor units is measured in an echo-free chamber. The noise test verifies that the operating noise is low enough so that the product operation will not disturb daily activities including conversations and sleep.



Sunshine simulation.



Amenity Test
An actual air conditioner is operated in a test room that simulates an ordinary living room. Conditions such as the amount of sunlight entering the room from outside are changed while measuring a variety of parameters, such as cooling speed, cooling efficiency, and temperature and humidity differences throughout the room. This makes it possible to confirm whether the air conditioner is operating at its designed performance level under ordinary conditions.



EMC (Electromagnetic Compatibility) Test
This test determines whether electromagnetic waves emitted during operation are sufficiently low to prevent adverse effects, i.e., electrical noise, on signals such as TV and radio broadcasts.



Remote Control Dropping Test
Because the remote control is the main interface between people and the air conditioner, it is naturally subjected to frequent impacts - such as drops and bumps - when it is passed from person to person during normal operation. Panasonic drops the remote control from a height of 1.5 metres at various angles to ensure that no problems in basic performance will result from accidental dropping.



World Standard Quality

Over the years, Panasonic air conditioners have continued to offer the highest possible quality with the lowest environmental impact worldwide. Naturally, the fundamental production principles that are common to all Panasonic products apply to air conditioners as well. The fact that these principles actively support every product, rather than simply serving as slogans, is the result of the endless repetition of challenges and trial-and-error efforts that are conducted at our production bases all over the world.

Quality. Is at the Core of All Our Manufacturing.



Reliable Parts with Major Standards Approval
Panasonic air conditioners comply with all of the major standards that maintain high reliability in the countries and regions where they are marketed. To ensure this, we conduct a variety of tests to examine the quality of materials used in parts.



The strength of the resin material used in the propeller fan is confirmed by the tension test.



RoHS/REACH Compliant Parts
All parts and materials comply with RoHS/REACH, Europe's world-leading environmental regulations. Stringent inspections of more than 100 materials are conducted to ensure that no hazardous substances are included during parts development.



Sophisticated Production Process
The air conditioner production line uses advanced, state-of-the-art factory automation technologies to produce products with higher reliability. Products are efficiently manufactured with high and uniform quality.



Eco Activities
Panasonic has set up eco ideas factories around the globe. While developing and manufacturing energy-saving products based on original environmental technologies, these factories reduce CO_2 emissions from manufacturing processes and conduct regional-based environmental communication activities to contribute to both the global environment and the local communities that they serve.

Panasonic Europe announces Sustainability Declaration

Panasonic establishes new targets for the business' environmental performance and CSR initiatives

Best Global Green Brand 2013

We were recently awarded Interbrand's 4th Best Global Green Brand 2013 – the highest of any consumer electronics brands. This is the result of our commitment to energy efficient products, reduction in CO_2 emissions, kids school 'eco learning' programme and much more.

Sustainability Declaration. Berlin, Germany, 4th September 2013

Panasonic Europe announces today its new Sustainability Declaration for Europe and CIS, extending its current initiatives to ensure all business activities lead to a more sustainable society.

The Sustainability Declaration unites Panasonic's new brand direction towards 'A Better Life, A Better World' with a series of environment and CSR initiatives contributing to the progress and development of society. Recognising the impact on the environment and society through its products and practices, Panasonic aims to deliver on specified targets by March 2016. The European Sustainability Declaration is in accordance with Panasonic's Global Sustainability Policy, which has been rolled out globally in recent weeks.

We aim to realize a lifestyle with virtually zero CO_2 emissions throughout the entire home

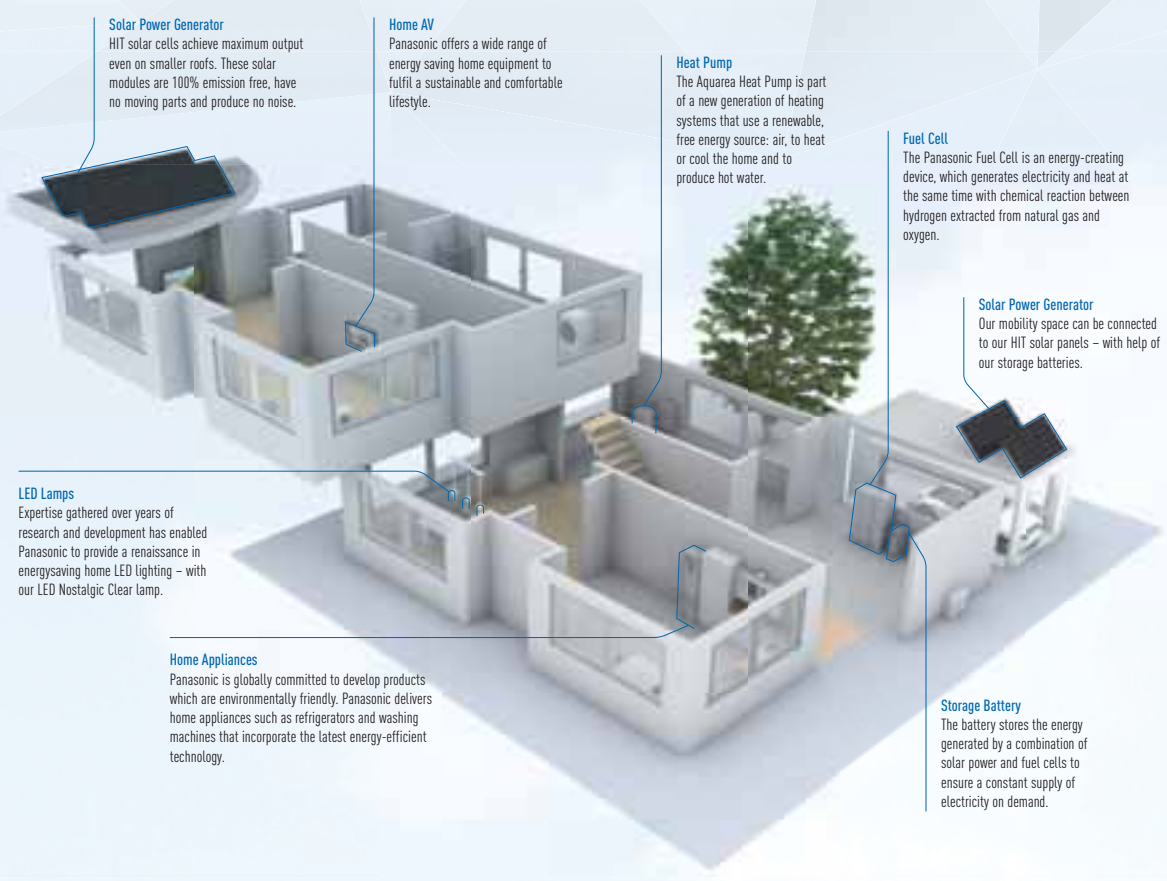

Exemplary sustainable projects



Fujisawa Sustainable Smart Town
Homes will employ the full range of Panasonic's most advanced systems for energy production, storage and management.
In this project, a new concept and process will be adopted to build the town by designing spaces first with a primary focus on services based on people's lifestyles and creating an optimal smart infrastructure. In Fujisawa SST, Panasonic will offer its unique solutions from an Eco & Smart perspective. With bringing energy to life for residents as the town concept, we will provide services that enhance people's lives with photovoltaic power, security, mobility, community, and healthcare.
The unparalleled town building, where as many as 1,000 families will live, will serve as a new business model both within Japan and overseas.



SMART ELECTRIC LYON

Panasonic joins Smart Electric Lyon consortium
What is Smart Electric Lyon?
Smart Electric Lyon is a project that looks at electricity consumption as a key part of the building energy solutions of tomorrow. The project aims to develop a wide range of innovative facilities and services through real-life experiments to test energy saving technologies and to measure how consumers can control energy consumption.
This experiment, unprecedented in scale in Europe, will be conducted for four years in more than 25,000 homes, businesses and communities of Grand Lyon. It is intended to test innovative solutions that will consume less and better.

Panasonic will provide the project with a variety of its energy efficient heating and cooling products, including the Aquarea Air Source Heat Pump – a super-efficient system for providing heating and / or cooling facilities, as well as the production of domestic hot water. These heat pumps are especially equipped with connectivity solutions from Panasonic to ensure the systems are easy to use, and collect the vital, accurate data. The company will also integrate other home equipment solutions such as LED white lighting products to optimize the overall energy management of the project's properties.
This project is particularly apt for Panasonic, as heating and hot water occupy a prominent place in household energy consumption. Panasonic plans to make its European and French resources available for Smart Electric Lyon. The company has involved for the project a dedicated and experienced R&D team from Panasonic's European technical centre in Frankfurt.



The connected home of the future





PRO Club: the professional website of Panasonic

Panasonic has an impressive range of support services for designers, specifiers, engineers and distributors working in the heating and cooling markets.

Panasonic announces a new initiative for all professionals involved in the heating and cooling business - the Panasonic PRO Club (www.panasonicproclub.com). Panasonic PRO Club is the online tool which makes your life easier! You just have to register and a lot of functionalities are freely available to you, where ever you are, from your computer or smart phone!

- **Print catalogues with your logo and your address**
- **Download the latest Aquarea designer to define your system and select the good Aquarea Heat pump.**
- **Calculate the specs of the Aquarea Air fan coil based on the parameters of your system**
- **Print energy labels for any combination (RAC and Commercial)**
- **Get Documents of conformity and all other documents you may need**
- **Download all the service manuals, end user manuals and installation manuals**
- **Know what to do with error codes**
- **Find out about the latest news first**
- **Register for training and take part in online training**
- **Download the latest VRF designer with PACi units and Autocad reader**

www.panasonicproclub.com
or connect simply with your smartphone to the proclub using this QR:

Highlighted Features

- Extensive library of resources
- Tools & Apps for end users. Check availability in your country:
  - My Home: sizing wizard for domestic and A2W range
  - My Project: Contact form to Panasonic team
  - iFinder: Lists of installers displayed by postcode
- Special offers & promotions
- Training PRO Academy
- Catalogues (Commercial documentation)
- Marketing (Images in high resolution, advertisements, deco guidelines)
- Tools (Professional software, sizing tools...)

NEW Highlighted Features

- NEW! Installers customize leaflets in PDF format with their logo & contact details
- NEW! Energy label generator. Download energy labels of any device in PDF format
- NEW! Heating calculator demand
- NEW! Noise calculator for outdoor unit
- NEW! Aquarea Radiator calculator
- NEW! Error Code Search by error code or unit ref. Compatible with smartphone and tablet computer
- NEW! Revit / CAD Images / Spec texts
- NEW! Access to Pananet, online library of technical documentation
- NEW! Download Documents of Conformity and other Certifications
- NEW! Commissioning online



NEW! Easy download Panasonic service documentation and brochures



NEW! Customize leaflets with your logo & contact details. Save and print the PDF



NEW! Energy label generator. Download Energy labels of any device in PDF format



NEW! Error Code on your smartphone and your PC: Search by error code or model reference. Online version + downloadable version for offline use



Panasonic PRO Club is fully compatible with Tablet computer and smartphone



The Panasonic PRO Academy opens its doors

Panasonic takes its responsibility to its distributors, specifiers and installers seriously and has developed a comprehensive Training Programme. The Panasonic Pro-Academy encompasses the traditional hands-on approach, as well as embracing today's technology to offer an eLearning facility available 24 hours, 7 days a week!

New training courses cover three levels. Design, installation, and commissioning & trouble-shooting. Training courses include:

- Domestic applications Air to Air
- Aquarea air source heat pumps
- VRF ECOi

The courses are offered on site at Panasonic's premises across Europe as well as via the Panasonic ProClub eLearning site. The Training Centres display Panasonic's latest product range and give delegates an opportunity to get hands-on experience with the latest controllers, indoor and outdoor units from the VRF ECOi, Etherea, GHP and Aquarea ranges.

ENERGY SAVING

High efficiency heating INVERTER+

Inverter+ System.
The A Inverter+ system provides energy savings of up to 30% compared to non Inverter models. Both you, and nature, wins!

Environmentally friendly refrigerant R410A / R407C

Refrigerant R410A / R407C.
R410A / R407C offers optimal performance and involves no environmental cost since it does not harm the ozone layer.

Down to -20°C in heating mode OUTDOOR TEMPERATURE

Up to -20°C In Heating Mode.
The Heat Pumps works in heat pump mode with an outdoor temperature as low as -20°C.

HIGH CONNECTIVITY

Boiler connection RETROFIT

Renovation.
Our Aquarea heat pumps can be connected to an existing or new boiler for optimum comfort even at very low outdoor temperatures.

Solar panels connection SOLAR KIT

Solar Kit.
For even greater efficiency, our Aquarea heat pumps can be connected to photovoltaic solar panels with an optional kit.

Domestic hot water DHW

DHW
With Aquarea you can also heat your domestic hot water at a very low cost with the optional hot water cylinder.

Easy control by BMS CONNECTIVITY

Connectivity.
The communication port is integrated into the indoor unit and provides easy connection to, and control of, your Panasonic heat pump to your home or building management system.

Internet Control Ready INTERNET CONTROL

Internet Control is a next generation system providing a user-friendly remote control of air conditioning or heat pump units from everywhere, using a simple Android or iOS smartphone, tablet or PC via internet.

5 year compressor warranty

5 Years Warranty.
We guarantee the compressors in the entire range for five years.



Aquarea's new Air To Water Heat Pump for residential applications

Offering capacities from 3kW all the way through to 16kW, the Aquarea Heat Pump Range is the widest on the market, ensuring a system is available, whatever your heating and cooling needs. Suitable for new build and refurbishment projects, the systems are cost-effective and environmentally friendly.

NF Pompe à chaleur

APPROVED PRODUCT MCS

* Not all products certified. As the certification process is on-going and the list of certified products constantly changing, please check for latest details on the official websites.

SEASONAL
EFFICIENCY



AQUAREA

NEW AQUAREA AIR TO WATER HEAT PUMP

Panasonic's new Aquarea Air To Water system can work in outdoor temperature even at -20°C
Panasonic's new Aquarea system, based on high-efficiency heat pump technology, not only heats your home and hot water, but also cools your home in summer with incredible operating performance. This creates perfect comfort whatever the weather conditions, even at outdoor temperatures as low as -20°C.
Panasonic new heat pumps are designed in response to the new demand for low consumption housing, with high efficiency and low running costs.

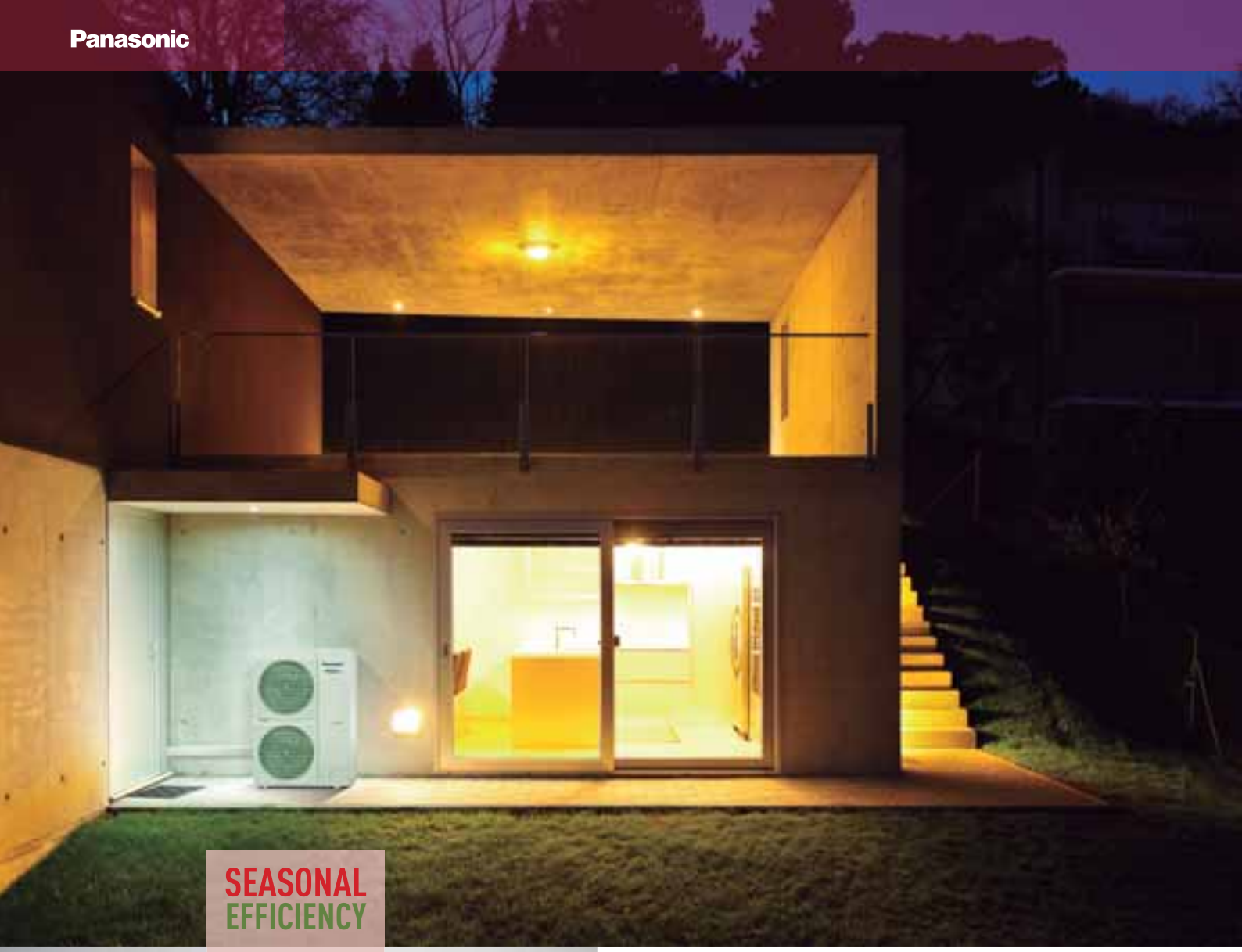

SEASONAL
EFFICIENCY



Aquarea the best seasonal efficiency

Panasonic's new Aquarea air to water system can work in outdoor temperature even at -20°C

Panasonic's new Aquarea system, based on high-efficiency heat pump technology, not only heats your home and hot water, but also cools your home in summer with incredible operating performance. This creates perfect comfort whatever the weather conditions, even at outdoor temperatures as low as -20°C. Panasonic new heat pumps are designed in response to the new demand for low consumption housing, with high efficiency and low running costs.

Impressive Energy Savings

Panasonic's Aquarea Heat Pump provides savings of up to 80% on heating expenses compared to electrical heaters.

A
class pump

The Panasonic Aquarea Heat Pumps are designed and produced by Panasonic and not by other companies.

Up to 80% energy savings*

At the forefront of energy innovation, Aquarea is resolutely positioned as a "green" heating and air-conditioning system. Aquarea is part of a new generation of heating and air-conditioning systems that use a renewable, free energy source – the air – to heat or cool the home and to produce hot water. The Aquarea heat pump is a much more flexible and cost-effective alternative to a traditional fossil fuel boiler.



"We expect to save around 1,000 € a year on fuel costs and we've been able to get rid of a large ugly oil tank in the garden thanks to the new Aquarea."

Aquarea Customer, Surrey[1]





1) Information provided by Aquarea customer, August 2012.

Why air source heat pumps?

- Reduced heating bills and maintenance costs
- Savings of up to Euro 1,000 a year are possible
- Reduce your carbon footprint
- Simple to integrate into most heating systems
- Energy efficient alternative to oil, LPG and electric systems
- Highly compatible with other energy efficient energy sources eg solar panels

Air source heat pumps – Quick facts

- Provides sustainable heating, cooling and hot water for your home
- 30%-40% reduction in annual energy bills
- Ideal for properties without access to mains gas
- Operates even in freezing temperatures (-20°C).
- Externally positioned saving valuable internal living space
- Proven technology from Panasonic and already well established in other EU countries

"Green" High-efficiency heating with Panasonic's new Air to Water Heat Pump Systems

Panasonic's Aquarea Heat Pump provides savings of up to 80% on heating expenses compared to electrical heaters. For example, the Aquarea 5kW system has a COP of 5,08. This is 4,08 more than a conventional electrical heating system which has a maximum COP of 1. This is equivalent to an 80%* saving. Consumption can be further reduced by connecting photovoltaic solar panels to the Aquarea system.

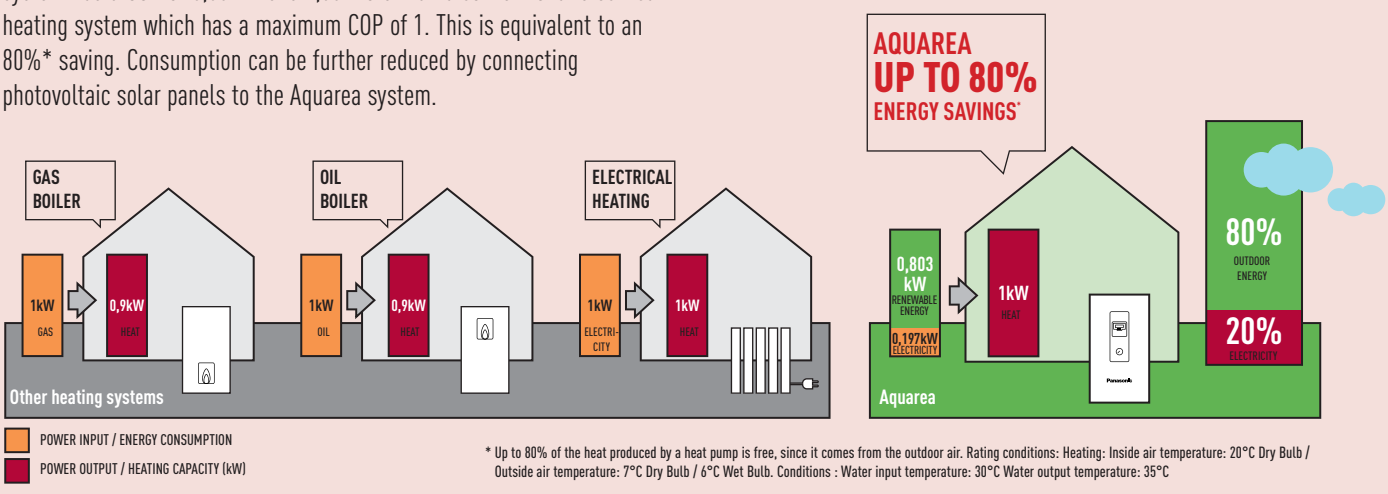

* Up to 80% of the heat produced by a heat pump is free, since it comes from the outdoor air. Rating conditions: Heating: Inside air temperature: 20°C Dry Bulb / Outside air temperature: 7°C Dry Bulb / 6°C Wet Bulb. Conditions : Water input temperature: 30°C Water output temperature: 35°C



Panasonic has designed a completely new line-up to offer the best to our customers

There are several types of heat pump available:

- The Mono-Bloc system: This only has an outdoor unit. The installation doesn't require a refrigerated connection and is only connected to the heating and/or hot water.
- The Bi-Bloc system: The system, separate indoor and outdoor units, connects to the heating and/or hot water system.

A wide range from 3 to 16kW, Single and Three Phase, Mono-Bloc and Bi-Bloc. 3 Versions:

- Aquarea High Performance: From 3 to 16kW
- Aquarea T-CAP: From 9 to 16kW
- Aquarea HT: From 9 to 12kW



Three Aquarea solutions



Aquarea High Performance for low consumption houses. From 3 to 16kW

For a house with low temperature radiators or under-floor heating, our high performance Aquarea HP is a good solution. This solution can work as a stand-alone unit or can be combined with an existing gas- or oil-fired heating system depending on requirements. This new solution is ideal for low consumption homes.

1) For WH-MDC05F3E5.



Aquarea T-CAP. From 9 to 16kW

If the most important aspect is to maintain nominal heating capacities even at temperatures as low as -7°C or -15°C, select the Aquarea T-CAP. This ensures that there is always enough capacity to heat the house without help from an external boiler – even at extremely low temperatures.
Aquarea T-CAP always has high efficiency and high heating capacity even at extremely low temperatures. With Aquarea T-CAP, you can always enjoy high savings.



Aquarea HT. From 9 to 12kW

For a house with traditional high-temperature radiators (such as cast iron radiators), the Aquarea HT Solution is the most appropriate as the Aquarea HT can work in output water temperatures of 65°C even at outdoor temperatures as low as -20°C.
Aquarea HT is able to deliver hot water to 65°C with the Heat Pump alone.



Aquarea outdoor air source heat pumps

Panasonic has developed an extensive range of air-to-water heat pumps designed to efficiently convert free air into sustainable heating and hot water. Fitted externally to your home and designed to operate in all year round weather conditions (-20°C), it's the smart alternative to oil, LPG and electric heating systems.



Aquarea Heat Pump Manager

This new generation of smart controllers for eco-efficient heating, features our versatile stand-alone controller not only for our heat pump systems, but also your gas, oil boiler and all other devices installed on your heating system.



Heating control App for smart phone, tablet or computer

The heating control App allows you to control the heating and hot water system via your smart phone, tablet or computer with ease, whether at home or away.
The heat pump can be also connected to house management system using KNX, Modbus or Zig Bee interfaces.



Super High Efficiency: PAW-TE20/30/50E3HI

- High efficient tank solution: specially designed to improve the efficiency of the sanitary hot water production.
- HI lineup:
  - low energy losses
  - high exchange surface for high efficiency and short time to heat up the water



High efficient radiators for heating and cooling

- High efficient radiators working with water at 35°C.
- No need for two kits if both floor heating and radiators are required.
- As the product is efficient, it opens the possibility to also provide cooling while still meeting construction requirements.

Panasonic offers a cooling mode within its heat pump range for low consumption homes



Heat Pump + HIT Photovoltaic solar panel

Photovoltaic solar panels: the best solution for big savings.
Combining photovoltaic solar panels with your heat pump can help to further reduce your electrical consumption and CO_2 emissions.
Additionally, with the unique HIT photovoltaic solar panel technology from Panasonic, you can produce more electricity per square metre, helping you to increase your energy savings still further.



NEW AQUAREA 5KW MONO-BLOC





New High Performance for low consumption homes.

Maximum savings, maximum efficiency, minimum CO_2 emissions, minimum of space.
Panasonic has designed the new Aquarea Bi-Bloc and Mono-Bloc heat pumps for homes which have high performance requirements.
Whatever the weather, Aquarea can work even at -20°C! The New Aquarea is easy to install on new or existing installations, in all types of properties.

New High Performance helps you to meet strict building requirements and reduce building costs

The heating and production of hot water have a very important impact on the energy consumption of a house. Efficient Panasonic heat pumps can help to significantly reduce the energy consumption of the house.

Total energy consumption of a conventional house, compared to the energy consumption with Panasonic heat pumps

TOTAL ENERGY CONSUMPTION OF A CONVENTIONAL HOUSE[1]

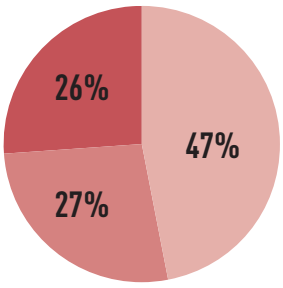

ENERGY CONSUMPTION WITH PANASONIC HEAT PUMPS[2]

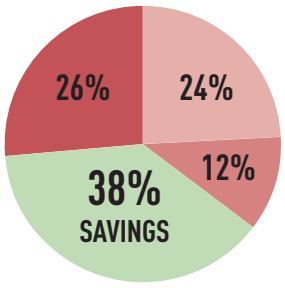

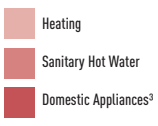

1. Source: IDEA, European values 2010. Consumption of a conventional house of 80 kWh/(m².year).
2. Source: Panasonic, RT2012 simulation, house of 50 kWh/(m².year) per year, equipped by Panasonic heat pump. 3. Eg. Fridge telephone, oven,...

Key points of the line-up

- A-Class pump significantly reduces the energy consumption

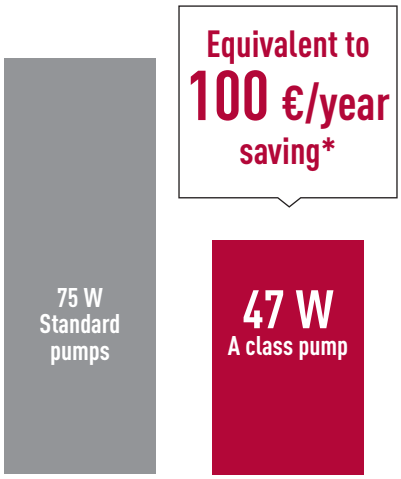

New A class pump with Constant water flow (Dynamic pump control) for 5kW Mono-Bloc

Comparison of energy consumption - Standard pumps vs A class pump

* Based on German market: Assuming Standard pump may vary depending on consumption and energy cost.

- A Class pump adapts water pressure according to demand, reducing energy consumption, noise on the valves, and makes installation easy.
- No Backup heater needed to maintain the capacity at -15°C, high efficiency guaranteed even at -15°C
- Many new remote control functions added:
  Auto mode, holiday mode, show power consumption

HIGH PERFORMANCE PUMPS ARE ALSO HIGHLY EFFICIENT

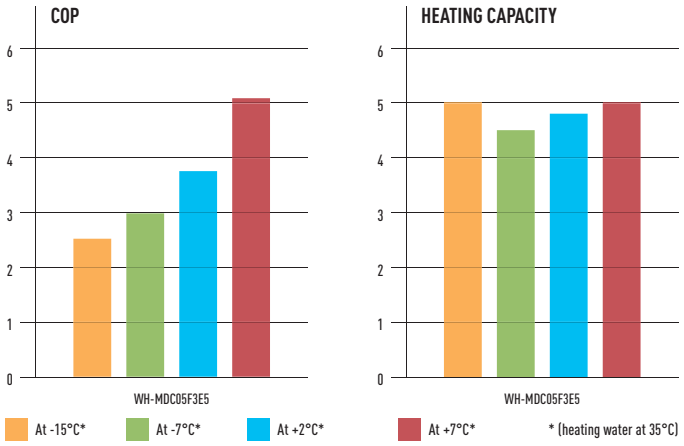

With a Panasonic heat pump, there is no need to oversize the heat pump to reach the required capacity at low temperatures.

- Dedicated software for low consumption houses which allows the heat pump to produce hot water at 20°C. This is needed during the seasons, when a little heating is required
- No need for an additional expansion vessel, as the unit already has a 6l expansion vessel
- No buffer tank required as the Panasonic heat pump has an inverter compressor which can regulate the capacity. (Please check on the service manual the minimum volume of water needed on the circuit)
- 3kW electrical heater is included on the heat pump
- Panasonic heat pumps can work in outdoor temperatures as low as -20°C and guarantee the capacity without backup heating down to -15°C
- Panasonic heat pumps are very quiet and have a night mode program for even lower noise. See noise calculator on www.panasonicproclub.com

Special attention has been given to noise levels - Panasonic created a night mode to reduce the noise when it's needed.

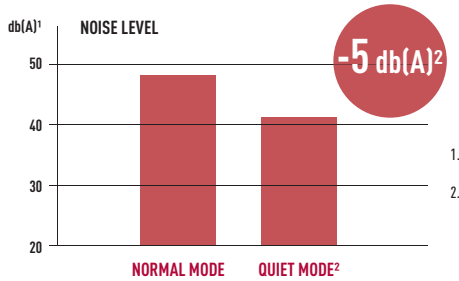

1. Sound pressure measured at 1 m from the outdoor unit and at 1.5 m height.
2. At standard condition working at heating capacity at +7°C (heating water at 35°C) for two fans outdoor units. For one fan outdoor units, night mode reduction is 3dB(A).

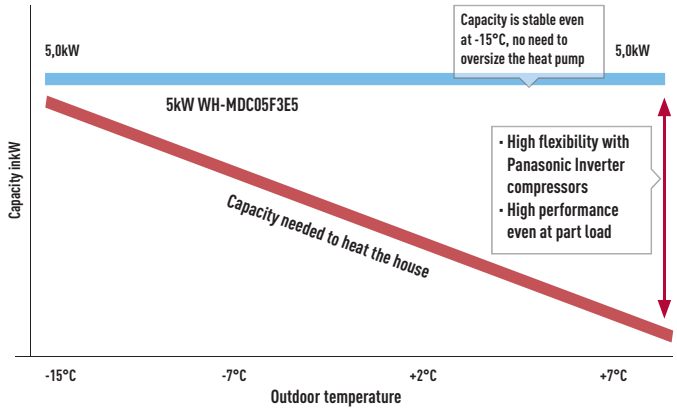

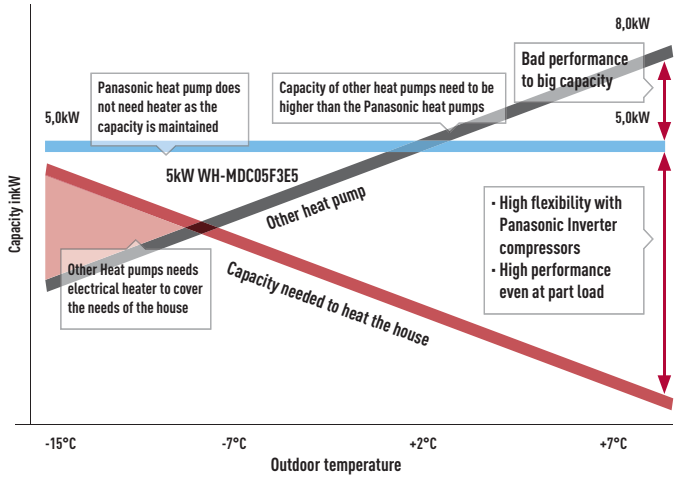





New T-CAP for extremely low temperatures. Install A Class pump: Industry top class energy-saving!

The whole T-CAP line-up can replace old gas or oil boilers, and in a new application with under floor heating, low temperature radiators or even fan-coil heaters. This range can also be connected to a solar kit in order to increase efficiency and minimize the impact on the ecosystem. Finally, it is possible to connect a thermostat for even better heating or cooling control and management.

- T-CAP stands for Total Capacity. This line-up is able to maintain the same nominal capacity even at -15°C without the help of an electrical booster heater.
- High heating capacity even at low ambient temperatures.
- Maintains capacity of 16 kW until -15°C outdoor temperature. Adding many new functions: Auto mode, Holiday mode, power consumption display.

The New T-CAP range has extended with the addition of the 16kW pump

The new 16kW maintains full capacity of 16kW even at outdoor temperatures down to -15°C.

The 16kW fits perfectly to retrofit houses, as well as to commercial applications to heat and cool the applications and also to provide sanitary hot water.

New Aquarea T-CAP. High capacity improvement at low ambient & high efficiency

Enhance larger capacity (16kW)

More Energy saving with A Class pump.

Adding new functions

Auto mode, Holiday mode, Displays power consumption, New de-ice control, Concrete Dry mode, Lock cooling mode and Pump speed control.

Applications



For retrofit houses
Replace easily expensive gas or oil boilers for high efficient 16kW T-CAP or manage bivalent installations (heat pump and existing gas or oil boiler) with the Heat Pump Manager.
Further information on: www.panasonicproclub.com



For commercial applications
Wide range of capacities now covered - from 9kW to 45kW with the Heat Pump Manager. Also you are able to connect up to five heat pumps on cascade with the Heat Pump Manager.

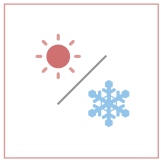

For heating and cooling mode
The 16kW model is able to heat the water at 55°C and can work even when the temperature is as low as -20°C. Cooling operation can be activated on the remote control to cool water up to +5°C.

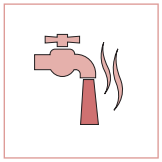

For heating and sanitary hot water
Efficient domestic hot water tanks allow large storage for high consumption of hot water (for example Jacuzzi or bathtub). All our tanks have an anti-legionella protection with a backup heater of 3kW.

Best efficiency compared to other heating Efficiency systems

Panasonic heat pumps have a maximum COP of 4.85 at + 7°C which makes them much more efficient than fossil fuel fired boilers, gas boilers and electrical heaters.

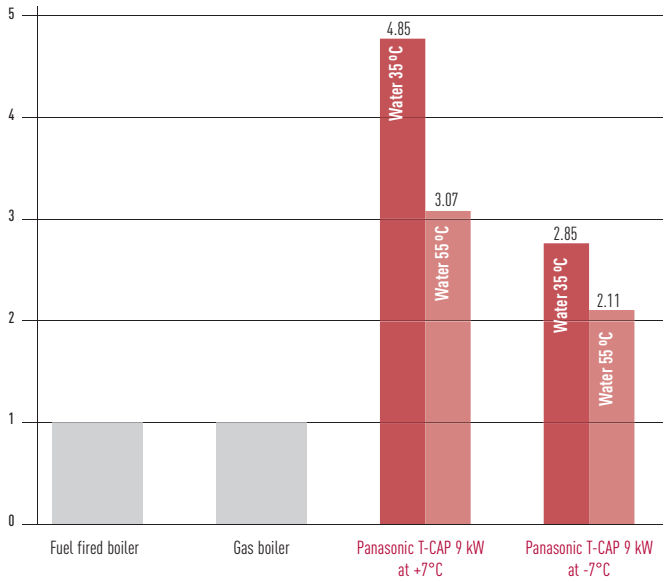

A Class pump. More Energy saving

Aquarea T-CAP maintains the nominal capacity until -15°C

The T-CAP line-up is able to maintain the same nominal capacity even at -15°C without the help of an electrical booster heater. T-CAP is also able to provide extremely high efficiencies, whatever the outside or the water temperature. Panasonic has now extended the range with the new three phase 16kW.

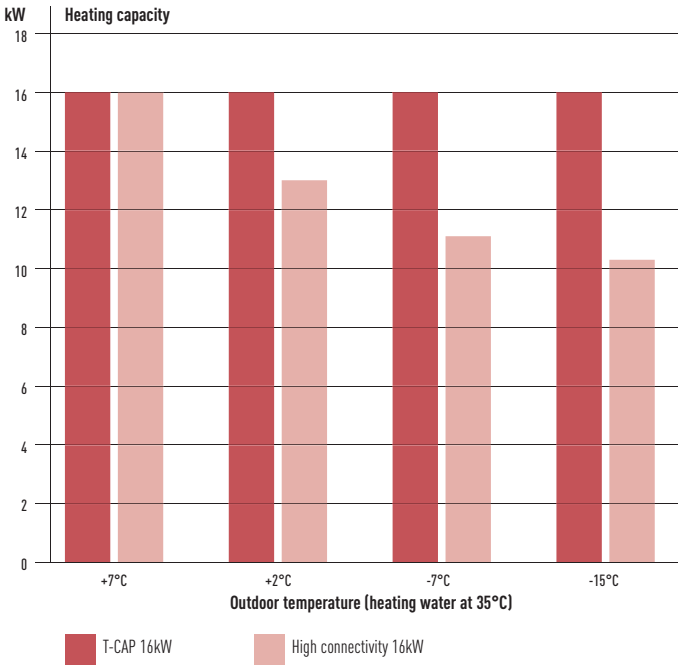

- Backup heater capacity can be selected (3/6/9kW)
- Cooling mode activation possible by software*

* This activation can only be done by service partner or installer

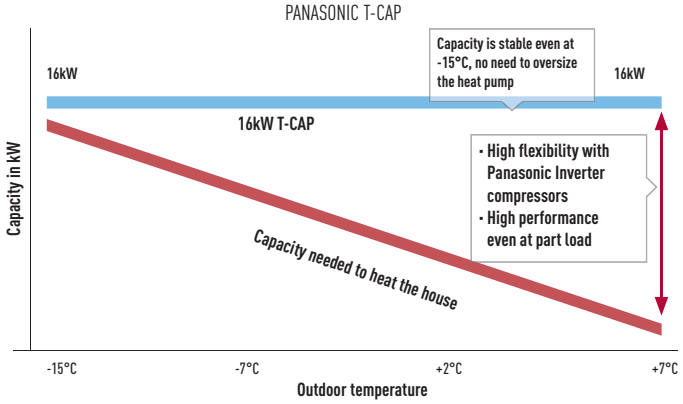

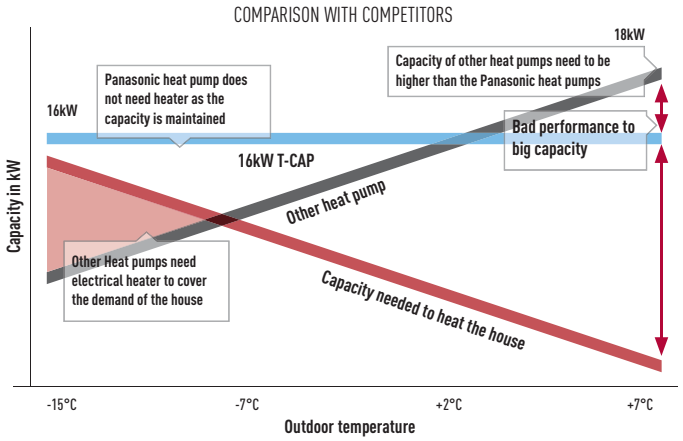





Aquarea HT ideal for retrofit: green energy source works with existing radiators

Replace a traditional heating source (such as oil or gas) with Aquarea HT, but keep existing old style radiators for minimum disruption to the home. From 9 to 12kW. For a house with traditional high-temperature radiators (such as cast iron radiators), the Aquarea HT Solution is the most appropriate as the Aquarea HT provides output water temperatures of 65°C even at outdoor temperatures as low as -15°C. Aquarea HT is able to deliver hot water to 65°C with the Heat Pump alone.

Panasonic Aquarea HT is super efficient even at low temperature.

Heating Capacity of a 9 kW HT (WH-SHF09F3E5)

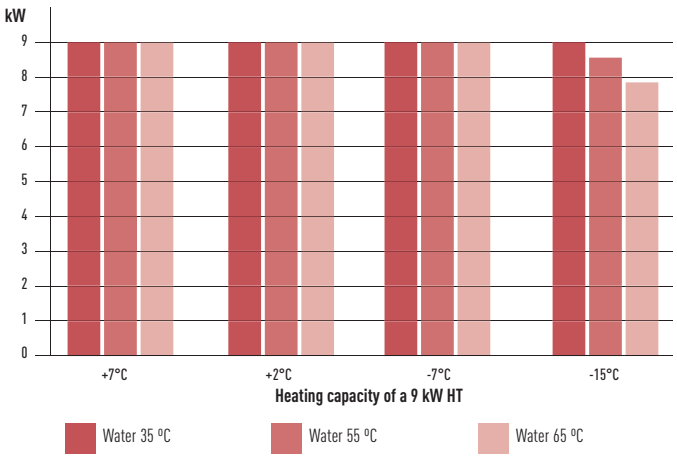

COP Coefficient of Performance

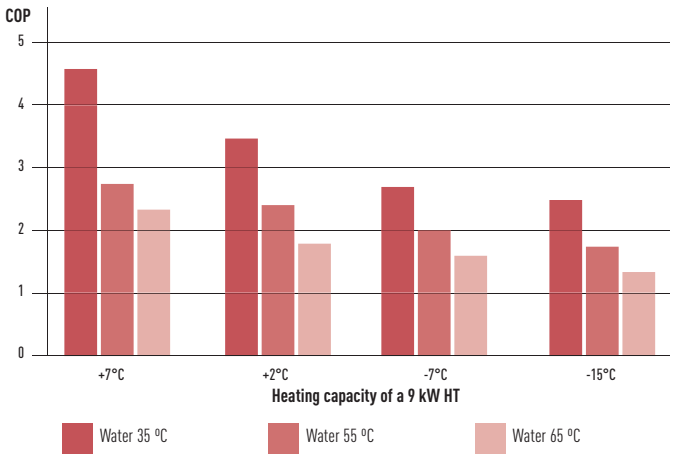



Panasonic Aquarea HT is super efficient even at low temperature

Aquarea HT: High savings and low CO_2

The results of replacing traditional heating systems with Aquarea HT are clear: lowest running cost and lowest CO_2 emissions. Panasonic heat pumps are much more efficient than gas boilers and help you to reach your house energy targets easier.

Yearly savings with Aquarea HT

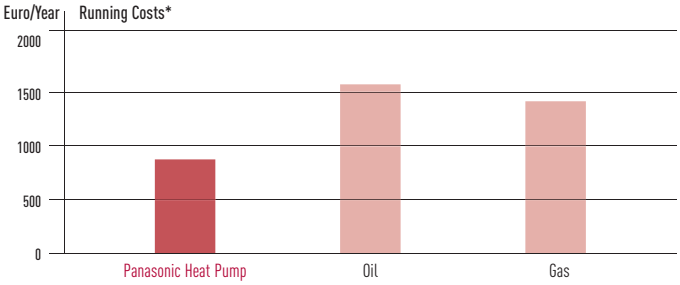

* For a 170 m² house and 40 W/m² energy losses in central Europe Conditions, outside minimum conditions -10°C.

Easy installation

Air source heat pumps are simple to install. They do not require a chimney, gas connection nor oil tank. All that is required is a standard power supply connection. Aquarea heat pumps are also quick to start up.

Smart Bivalent operation



Thanks to Aquarea HPM (Heat Pump Manager), it is possible to combine different heat sources and use the most appropriate source, depending on user's preferences. This smart control will decide which is the best source to use anytime.
Thus, if it is necessary to combine gas heater, oil with heat pump, Aquarea HPM is simply the best solution.

Heat Pump + Boiler Management with DHW with PAW-HPM12Z0NELCD-U

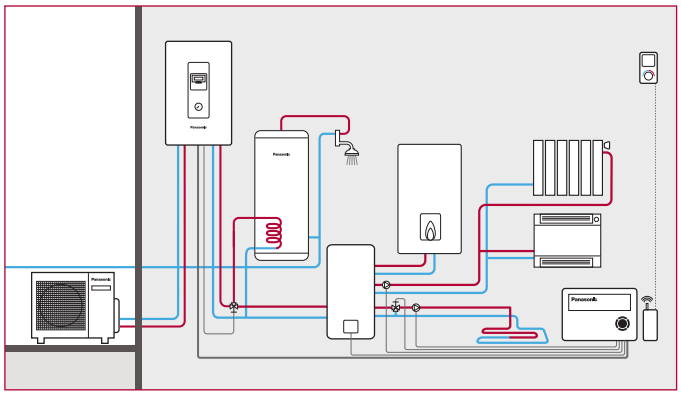



New DHW Tank with buffer Tank PAW-TD20B8E3-NDS

Designed for retrofit applications, the new DHW 200l tank with a 80l buffer tank is particularly suitable for fast integration on an existing installation. Panasonic has developed a New tank with 80l Buffer tank and 200l Sanitary hot water cylinder. This tank includes a 3-way valve and an A Class pump. Easy to install, nice looking, high efficiency for DHW production and for heating.

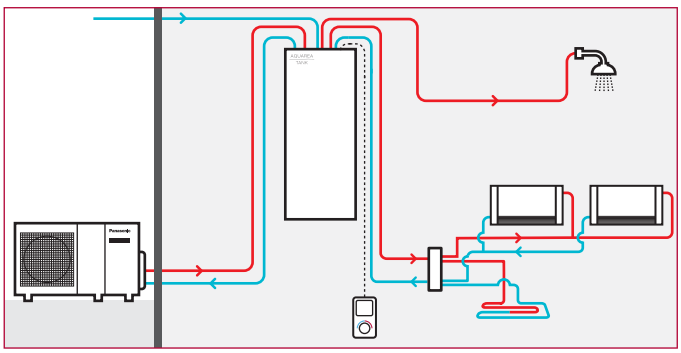





Aquarea commercial solutions for best savings

Efficient Panasonic heat pumps can help to significantly reduce the energy consumption of your business.
Recent improvements to air source heat pump technology, including compact single unit systems, can provide an ideal housing and commercial solution. They offer space saving, energy-efficient heating and can be easily adapted for installation in flats, houses and commercial premises.
And for businesses producing heat, such as restaurants, installing an Aquarea heat pump system can also use this wasted heat to improve energy efficiency further.

"Green" High-efficiency heating with Panasonic's new Air to Water Heat Pump Systems
Panasonic's Aquarea Heat Pump provides savings of up to 80% on heating expenses compared to electrical heaters. For example, the Aquarea 5kW system has a COP of 5,08. This is 4,08 more than a conventional electrical heating system which has a maximum COP of 1. This is equivalent to a 80%* saving. Consumption can be further reduced by connecting photovoltaic solar panels to the Aquarea system.

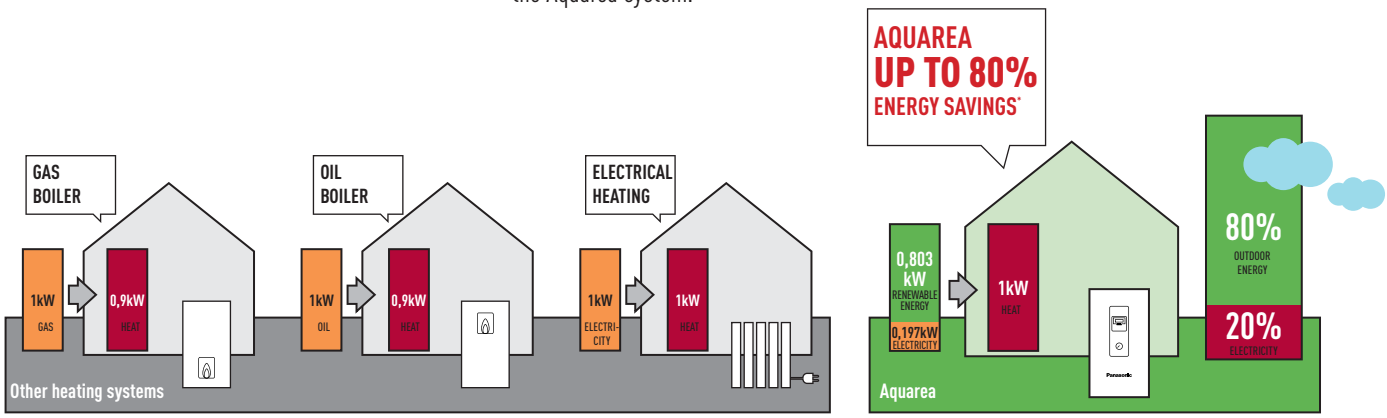

POWER INPUT / ENERGY CONSUMPTION
POWER OUTPUT / HEATING CAPACITY (kW)

* Up to 80% of the heat produced by a heat pump is free, since it comes from the outdoor air. Rating conditions: Heating: Inside air temperature: 20°C Dry Bulb / Outside air temperature: 7°C Dry Bulb / 6°C Wet Bulb. Conditions : Water input temperature: 30°C Water output temperature: 35°C

By flexible with your water system

Easy connection to existing system
- Fan Coils
- Floor Heating
- 4 way and 2 way convectors
- Domestic hot water tanks

Key points:
- High efficiency
- Very good part load management
- Cascade management for higher durability of the system

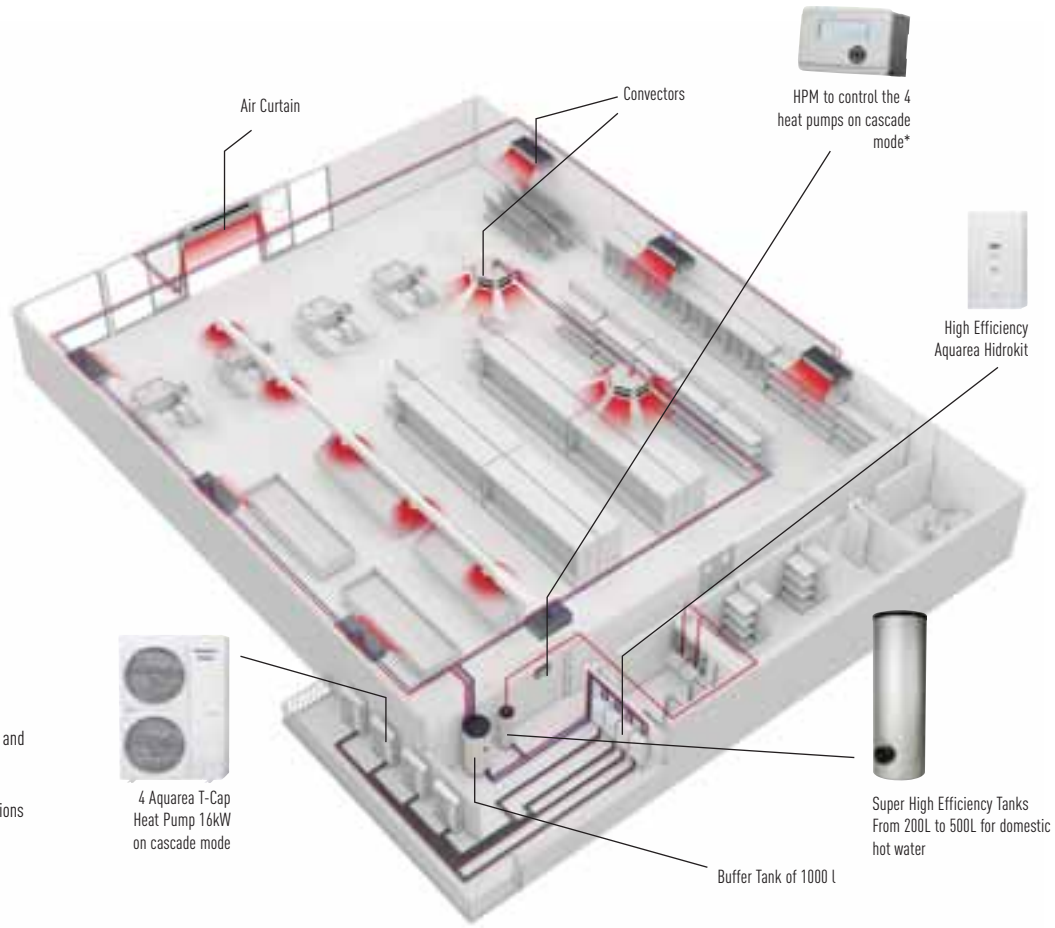

Supermarket with Aquarea

Heat pump technology is scalable, meaning that it can be installed in buildings of varying sizes, offering both small- and large-scale heating solutions. The technology is also environmentally friendly when compared to existing technologies, offering demonstrable energy-use and emissions savings and in most cases; will deliver operational cost savings when compared with fossil fuel alternatives.

* 1 HPM can control 3 HP, on this case 2 HPM are needed

Key points:
- Produce hot water efficiency
- Fast return of investment
- Easy control
- Cascade management for higher durability of the system

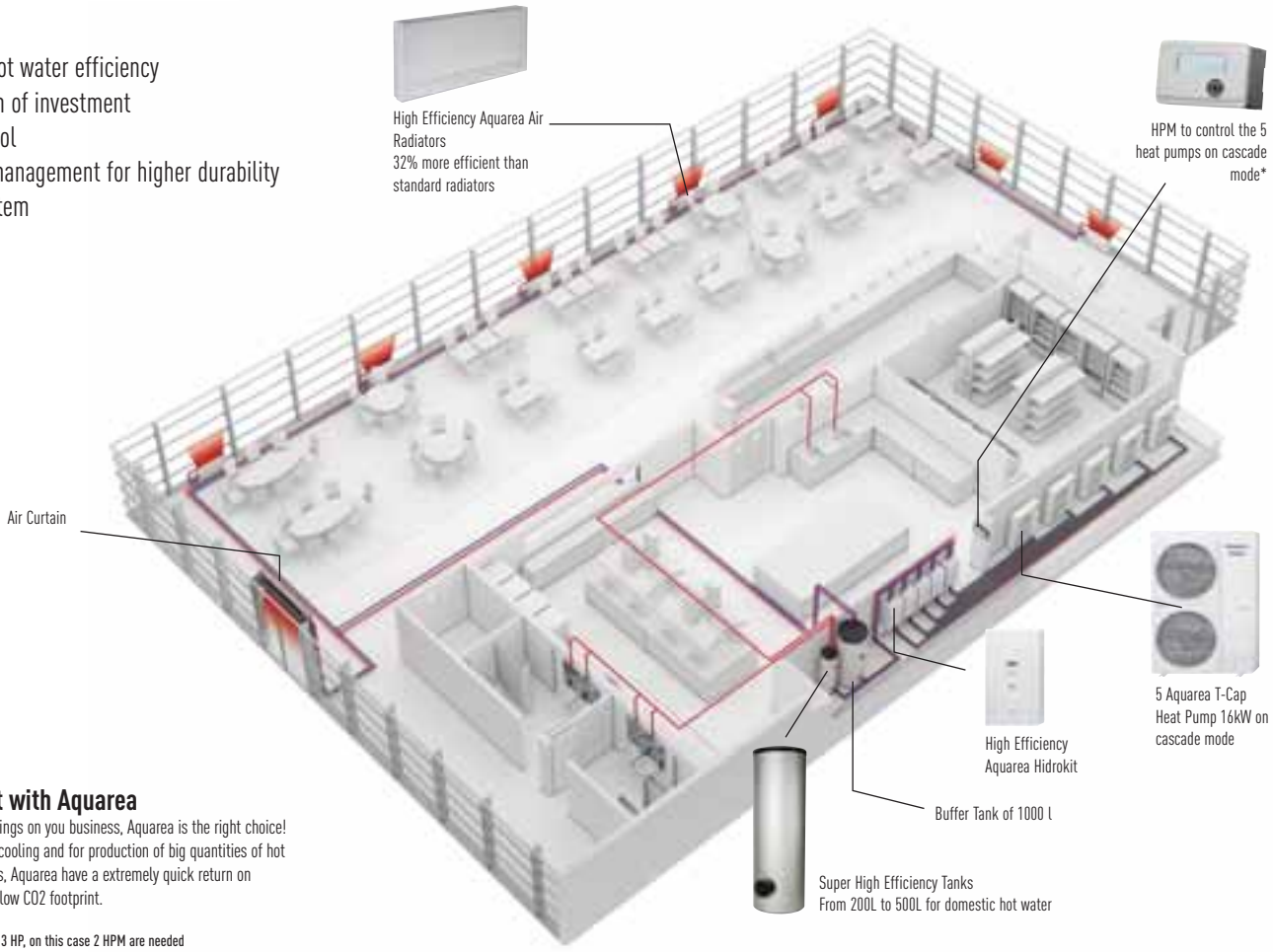

Restaurant with Aquarea

If you look for savings on you business, Aquarea is the right choice! Ideal for heating, cooling and for production of big quantities of hot water at 65 degres, Aquarea have a extremely quick return on investment and a low CO2 footprint.

* 1 HPM can control 3 HP, on this case 2 HPM are needed



1. Highly efficient solution
2. Easy installation
3. A class pump
4. 200l Tank included
5. Easy integration of the HPM remote control

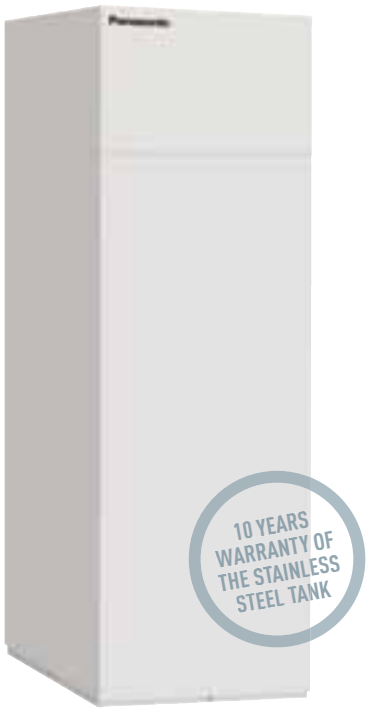

New All in one*

New All in One hydromodule + 200l tank
Panasonic has developed a highly efficient solution, easy to install.
Furthermore, Panasonic has developed a range of controllers which allows the control of 2 heating zones, bivalent and cascade systems.

Line up
3, 5, 7, 9kW with 12, 14, 16 kW Single Phase and 9, 12, 14, 16kW Three Phase.

*Preliminary design. Significant changes may occur.

High efficiency solution

The best of Panasonic:

- Best stainless steel tank with high insulation to reduce energy losses
- High exchange surface to increase efficiency
- Best performing Aquarea hydraulic module to heat the water.

Connectivity Possibilities

3 Remote controls can be installed:

- New Remote control. New function for customer:
  - Auto Mode for Heating and Cooling mode
  - How to show Energy Consumption
  - How to set Holiday Mode
- Heat pump Manager for more then 600 installations possible (as 2 zone control, Bivalent, etc.)
- Heat pump Manager with touch screen LCD.

All In One Tank+indoor unit	Outdoor unit connection
WH-ADC0309G3E5	WH-UD03EE5
	WH-UD05EE5
	WH-UD07FE5
	WH-UD09FE5
WH-ADC1216G6E5	WH-UD12FE5
	WH-UD14FE5
	WH-UD16FE5
	WH-UX09FE5
	WH-UX12FE5
WH-ADC0916G9E8	WH-UD09FE8
	WH-UD12FE8
	WH-UD14FE8
	WH-UD16FE8
	WH-UX09FE8
	WH-UX12FE8
	WH-UX16FE8



Aquarea All in One Bi-Bloc (Inverter)

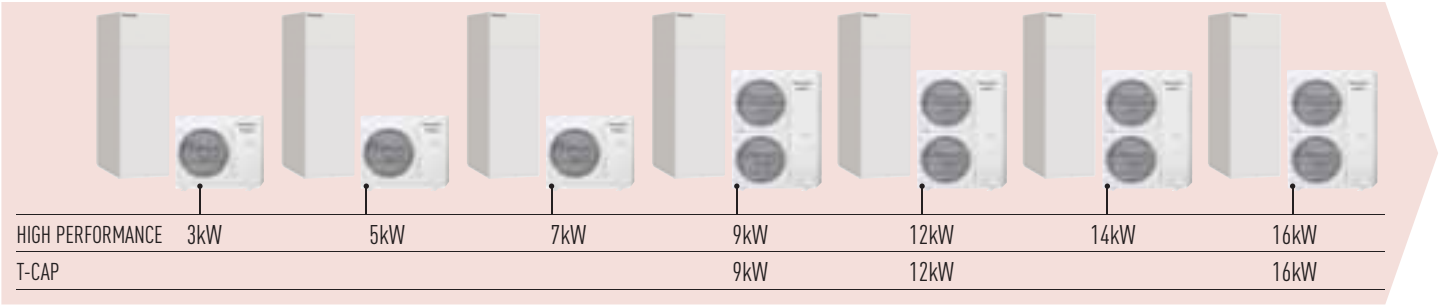

HIGH PERFORMANCE	3kW	5kW	7kW	9kW	12kW	14kW	16kW
T-CAP				9kW	12kW		16kW



New remote control. New features

For 2014, Panasonic has introduced a new remote controller to improve performance, enhance comfort and deliver maximum savings.

New function for installer

- Floor heating concrete dry mode
- How to Lock Cool Mode
- Class A Pump management with 7 speeds

Floor heating concrete dry mode: Allows slow increase in temperature of floor heating via software.

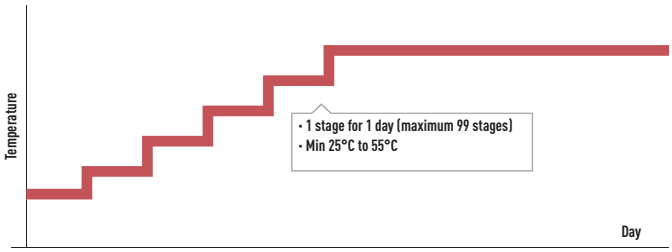

Heating and Cooling Mode: Authorized service partner or Authorized installer can enable the cooling mode through a special operation via the remote controller on site.

Pump with 7 speeds: Pump speed can be selected on the remote control.

New Remocon changing point

Better user interface:

1. Adding Holiday Mode
2. Adding Power Consumption

LCD display:

1. Expand LCD display to show mode on left and right side
2. Adding AUTO mode and remove defrost display (using heat blink)
3. Change not available into EXT SW OFF
4. Adding kWh and Hr

Button:

5. Adding holiday button
6. Change force and error reset position

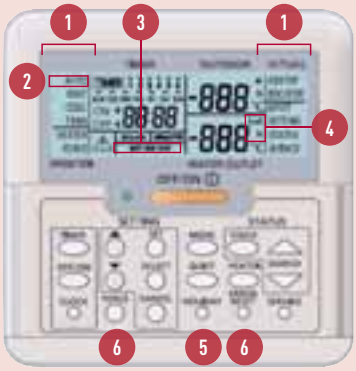

New function for end user

- Auto Mode for Heating and Cooling mode
- Show Energy Consumption
- Set Holiday Mode

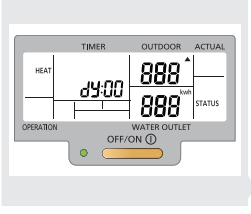

Auto Mode: Automatically changes from heating to cooling depending on outdoor temperature.

Energy Consumption: Displays the heat pump's energy consumption, split by heating, cooling and domestic hot water, and shows total consumption figure.

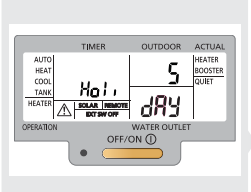

Holiday Mode: Enables the system to resume at the preset temperature after your holiday.

New indoor unit design

- New A-class pump with 7 speeds
- Expansion vessel of 10L
- Selectable back-up heater (3/6/9kW)



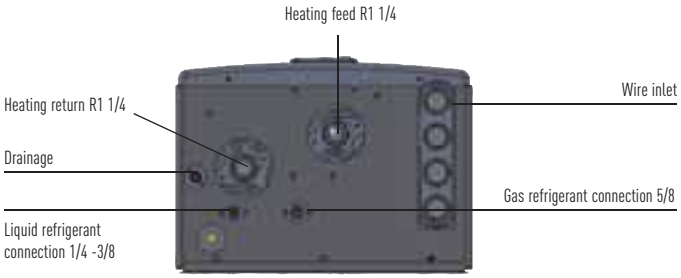

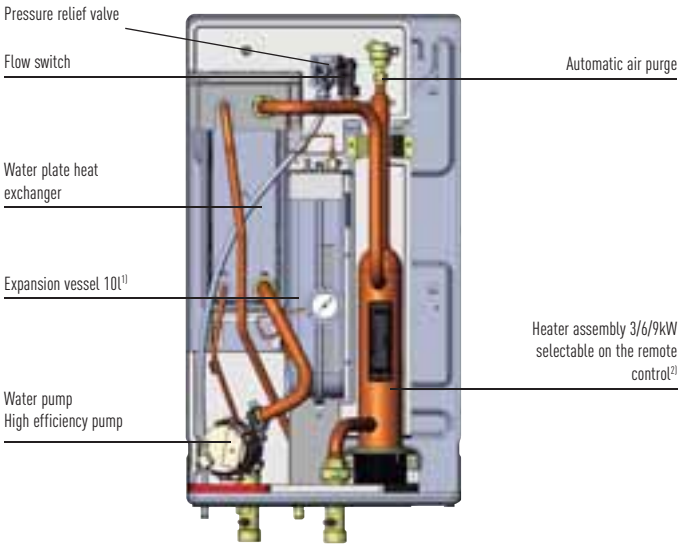

1) 6 l for the 3kW, 5kW and 6kW.
2) 3kW for 7 and 9kW, 6kW for 12, 14, 16kW Single Phase, 9kW for 12, 14, 16kW Three Phase.

Inverter+ compressor for even greater efficiency

Panasonic has clearly demonstrated it status as leaders in this field with over 200 million compressors supplied and the excellent quality and reliability of its heat pumps. With a Panasonic Inverter+ compressor, you can save up to 30% energy compared to a traditional system with no inverter. With a Panasonic Inverter compressor, the heat pump is always producing heat with the maximum of efficiency and adapting the capacity to the element.



The advantages of inverter heat pumps. Comparing Inverter and non-Inverter heat pumps.

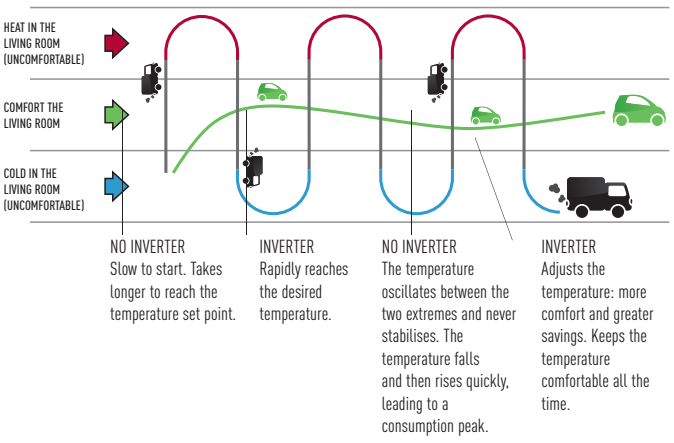







HPM

Heat and produce Domestic Hot Water for free

Panasonic has developed an innovative algorithm for its HPM (Heat Pump Manager) which drastically improves the Heat Pump's use of self-generated electricity from connected Photovoltaic panels. The Heat Pump will take the electricity generation by the solar system into consideration for the heating system and the domestic hot water production, without reducing confort in the house.

The HPM (Heat Pump Manager) activates the heat pump based on:

- Energy produced by the photovoltaic system.
- The consumption requirement of the house, eg if a washing machine is working, the heat pump will not draw electricity from the photovoltaic system to avoid net increases on overall energy consumption and hence maximise efficiency.
- Heating demand of the house (in case of high electricity production, the house can be overheated by 1 or 2 degrees, or reduced by 1 or 2 degrees if low production of electricity).

As the production of domestic hot water is linked to the level of electricity generated by the solar system, if this was too low, the heat pump would start a normal process to maintain maximum comfort in the house for a given set time (defined by the user).

Key points

- Increases the amount of self-consumed electricity from the solar system up to 120%.
- Control the heat pump's energy consumption according to the output of electricity from the PV considering the electric energy consumtion requirement of the house.
- Innovative algorithm balancing the consumption of the heat pump and the comfort in the house based on the outside temperature and the energy demand of the building.
- Easy configuration of the Heat Pump manager system with the PV system.

*Results of simulations for new housing (see next page)

Comparison on New housing
Increase usage of self production by: 120%

The HPM could increase the energy consumption of the heat pump coming from the Photovoltaic from 352 kWh to 775 kWh a year. Results of simulations:

New building Frankfurt (non-optimized)

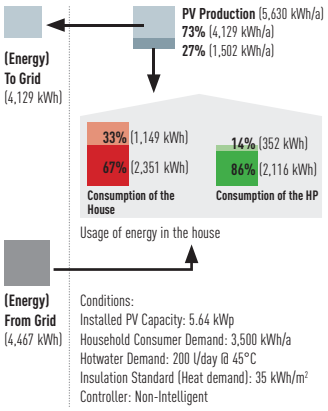

Conditions:
Installed PV Capacity: 5.64 kWp
Household Consumer Demand: 3,500 kWh/a
Hotwater Demand: 200 l/day @ 45°C
Insulation Standard (Heat demand): 35 kWh/m²
Controller: Non-Intelligent

New building Frankfurt (optimized-eco)

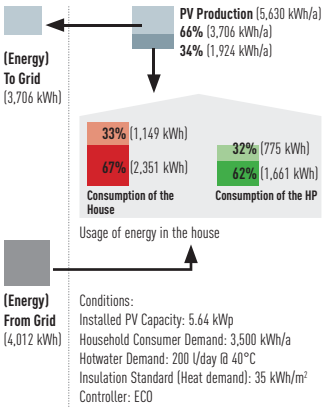

Conditions:
Installed PV Capacity: 5.64 kWp
Household Consumer Demand: 3,500 kWh/a
Hotwater Demand: 200 l/day @ 40°C
Insulation Standard (Heat demand): 35 kWh/m²
Controller: ECO

Comparison on Old housing
Increase usage of self production by: 71%

The HPM could increase the energy consumption of the heat pump coming from the Photovoltaic from 526 kWh to 898 kWh a year. Results of simulations:

Old building Frankfurt (non-optimized)

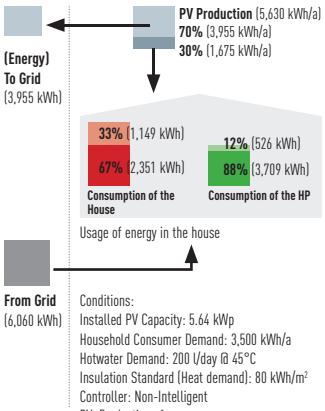

Conditions:
Installed PV Capacity: 5.64 kWp
Household Consumer Demand: 3,500 kWh/a
Hotwater Demand: 200 l/day @ 45°C
Insulation Standard (Heat demand): 80 kWh/m²
Controller: Non-Intelligent
PV: Production of energy

Old building Frankfurt (optimized-eco)

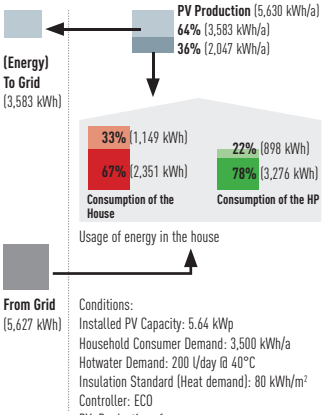

Conditions:
Installed PV Capacity: 5.64 kWp
Household Consumer Demand: 3,500 kWh/a
Hotwater Demand: 200 l/day @ 40°C
Insulation Standard (Heat demand): 80 kWh/m²
Controller: ECO
PV: Production of energy

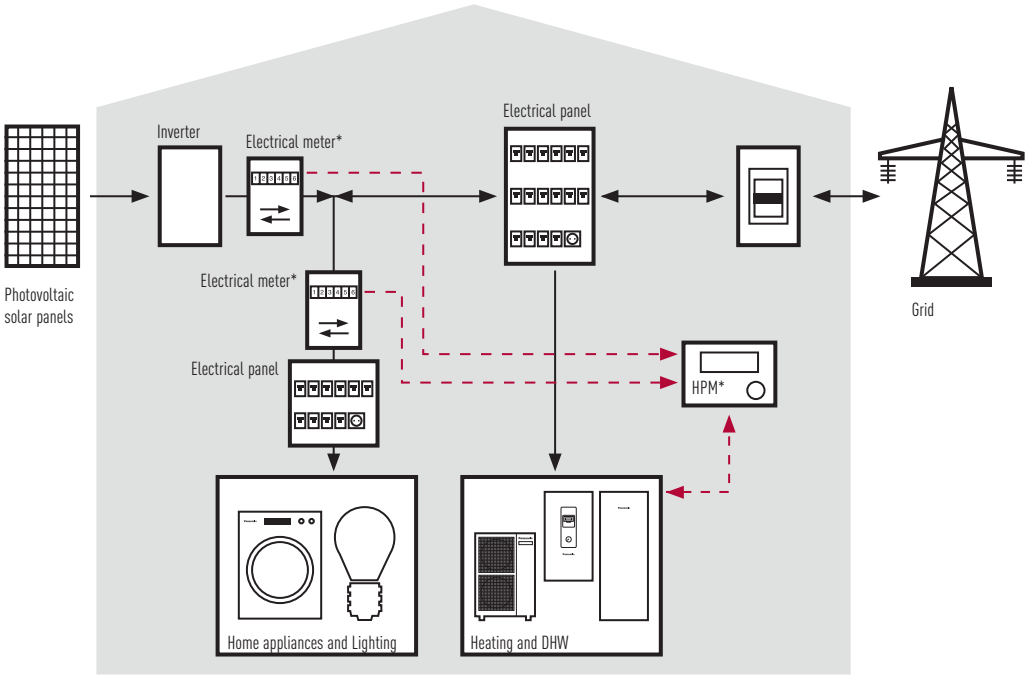

PV + HP control

How to create added value of the combination PV+HP?

- Optimize the HP considering the PV production
- When the PV is producing enough to cover the HP consumption, then Tank mode will be forced to heat up the DHW to 55 or 65 degrees
- If buffer tank on the installation, temperature on the buffer tank will increase 1-to 5 degrees or up to 55°C.

*Device supply by Panasonic-PAW-HPM-Solar (HPM + 2 Electrical Retors)

Standard combination PV+HP. Why the Panasonic HPM can increase by 120% the performance of the combination PV+HP

Typical Electricity consumption and production profile WITHOUT Panasonic HPM

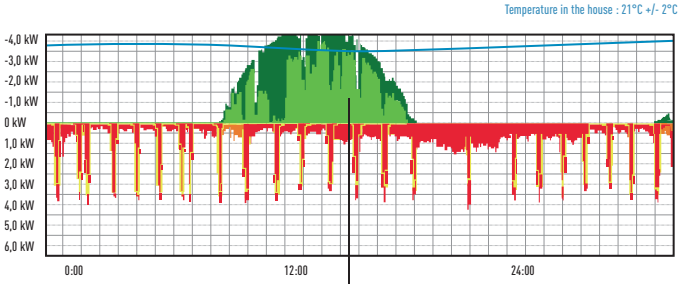

Total electricity used in the house and by the HP
PV production used in the house and by the HP
PV production send to the grid
Electricity used by the HP

No optimization of the consumption of the HP, production and consumption only match on 13%

Typical Electricity consumption and production profile optimize by the Panasonic HPM

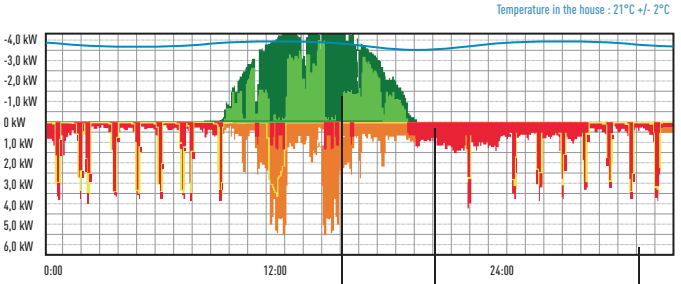

By forcing the HP to run when there is production. The Panasonic HPM increases the consumption of free electricity coming from the PV by 56%

The HP does not have to work when there is high demand of electricity during the evening for example

The house temperature is maintained, to ensure comfort. A variation of 1 to 2 degrees can be programmed in order to increase the performance of the system

HPM
NEW CONTROL
FUNCTION



Control & connectivity

Aware of the importance of both control and connectivity in offering the best comfort at the lowest price, Panasonic offers its customers cutting-edge technology, specially designed to ensure our Aquarea heat pump systems deliver maximum performance. You can properly manage the heat pump and perform comprehensive monitoring and control, with all of the features the remote control provides at home, from anywhere in the world thanks to the internet applications Panasonic has created for you.

New

Connected to a router, all information of the heating system controlled by the HPM is available from internet. Installers, service companies and end user can monitor the installation remotely.
Panasonic has developed a new easy start up mode for the HPM.
Start your bivalent system in just 10 minutes!

OPTIONAL





With or without built-in display



External touch display with the Heat Pump Manager

The next generation of Aquarea Manager

This new generation of smart controllers for eco-efficient heating features our versatile stand-alone controller for heating and domestic hot water.

Panasonic offers:

Trends. Statistics. Consumption Energy Management-Optimization. Alarm. Handling + Maintenance. Complete documentation etc.



READY STEADY GO

Easy Installation & Easy Configuration

Ready: Pre-programmed with up to 610 applications/system diagrams

Steady: At start up - state the number of application/system diagram

Go: The controller starts working according to selected diagram

Key points

- Easy selection with the "ready to go" system
- Up to 610 preconfiguration installations available on **www.panasonicproclub.com**
- Cascade system possible for big installations.
- Bivalent control in order to also manage gas boilers
- Able to control 2 mixed heated zones
- Smart grid ready
- Solar panel mode in order to produce heat when the PV is generating electricity
- Online access with control of all parameters.
- Easy installation and needs less than 3 minutes to configure a complex system

Technical Specification

- New function: Smart Setup
- Control of 2 x Mixed Heating Circuits
- Floor screed dry program
- Cascade/bivalent controller
- Automatic switch from heating to cooling mode
- Night shift: - Internal Energy Manager
- Solar collector control
- Domestic hot water priority
- Easy to startup – easy to operate
- 7 output relays
- 0-10 V In/Output Signal
- 8 Sensor inputs (PT1000)
- USB interface (upload, service, remote control, trend)
- RS485 interface (com. with additional heat pump)
- RS485 interface (for external display)
- Built-in backlit text display

Easy mounting

Simple mounting without screws in the cabinet/door or on DIN-rail. Also possible to mount directly on to the wall.

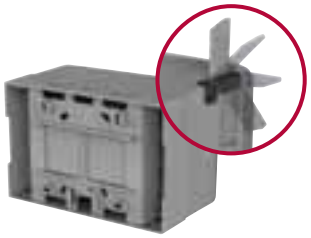

Control your heat pump from wherever you are. Control your comfort and efficiency with the lowest energy consumption



PAW-AW-WIFI-1 IntesisHome for web control
PAW-AW-WIFI-1TE IntesisHome for web control with Wired room temperature sensor to display the temperature of the room

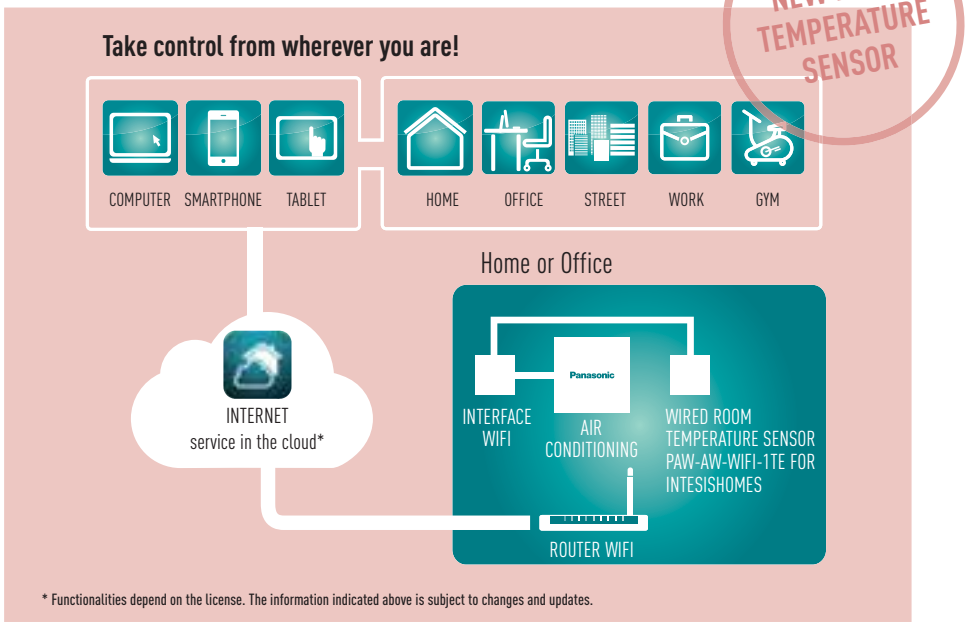

* Functionalities depend on the license. The information indicated above is subject to changes and updates.

What's Internet Control?

Internet Control is a next generation system providing user-friendly remote control of air conditioning or heat pump units from anywhere, using a simple Android or iOS smartphone, tablet or PC via internet with the optional Wired Room temperature sensor, the temperature be display (only with PAW-AW-WIFI-1A.

Simple Installation

Just connect the Internet Control device to the air conditioner or heat pump with the supplied wire and then link it to your WIFI Access point.

Internet Control. Easy to install. Maximum benefit

Internet Control is underlined with the slogan "Your home in the cloud", meaning a simple and easy to handle solution has been considered for every user to manage the device, not requiring any communication or computer skills.

No servers. No adaptors. No wires. Just a small box needs to be connected and placed close to the air conditioning indoor unit... and your smartphone, tablet or PC.

Your existing WiFi connection does the rest when you are at home. Start the App from your smartphone device, your tablet or your computer, and enjoy a new experience in comfort. And if you are out of home, just launch the App, and manage the air conditioning of your home from the cloud. An intuitive and user-friendly application on the screen of your smartphone or PC that lets you manage the air conditioning unit in the same way you do with the remote controller at home.

Internet Control can be downloaded in Apple's AppStore and Android's PlayStore.

Control your air conditioning with the smart internet control device via smartphones, tablet, PC and smart desktop phone via internet

Offering the same functions as if you were at home or office: start/stop, Mode Operation, Set Temperature, Room Temperature etc as well as the new, advanced functionality provided by Internet Control to achieve the best comfort and efficiency with the lowest energy consumption.





Case Study: Helen, Panasonic customer

"I was sick of heating my house in the mountains on the weekends when I couldn't go. It was a pointless and annoying expense.

But now, with Internet Control, I've managed to put the rigidity of weekly programming behind me. If I go then I just put my Panasonic Aquarea heating system on. And if I don't go then I go to the cinema or the theatre with the money I've saved."

Connectivity: Great flexibility for integration into your KNX / Zig Bee / Modbus projects allows fully bi-directional monitoring and control of all the functioning parameters



Panasonic works with partners to ensure the optimum solutions for our clients. Our partner has designed a range of interfaces specifically for Panasonic to provide complete monitoring, control and full functionality of the entire Aquarea line-up from KNX, Zig Bee and Modbus installations.
This connectivity solution is made by a third party company, please contact Panasonic for more information.

Easy control by BMS
CONNECTIVITY

KNX

Interface to connect Aquarea to KNX
Reference: PAW-AW-KNX-1i
This new Aquarea-KNX interface allows full monitoring and control, bi-directionally, of all the functioning parameters of Aquarea control from KNX installations.
- Small dimensions. / Quick installation and possibility of hidden installation.
- External power not required.
- Direct connection to the unit.
- Fully KNX interoperable. Control and monitoring, from sensors or gateways, of the internal variables of the indoor unit and error codes and indication.
- Aquarea unit can be controlled simultaneously by the remote control of the Aquarea unit and by KNX devices.

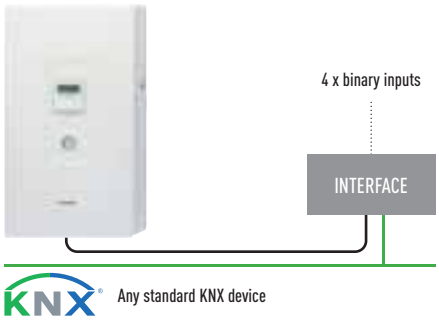

Model name	Interface
PAW-AW-KNX-1i	KNX Interface
PAW-ZIG-A2W	Interface to connect to Zig Bee
PAW-AW-MBS-1	Modbus Interface
PAW-AW-WIFI-1	Interface for Intesishome for Aquarea models
PAW-AW-WIFI-1TE	Wired room temperature sensor (only for PAW-AW-WIFI-1)

ZigBee Control your world

Interface to connect Aquarea to Zig Bee
Reference: PAW-ZIG-A2W
This new Aquarea-Zig Bee home automation interface allows full monitoring and control, bi-directionally, of all the functioning parameters of the Aquarea control from Zig Bee installations.
- Small dimensions. / Quick installation.
- External power not required.
- Direct connection to the Aquarea unit using the same parameters as on the control.
- Fully Zig Bee interoperable. Control and monitoring, from sensors or gateways, of the internal variables of the indoor unit and error codes and indication.
- Aquarea unit can be controlled simultaneously by the remote control of the Aquarea unit and by Zig Bee devices.



Modbus®

Interface to connect Aquarea to Modbus
Reference: PAW-AW-MBS-1
This new Aquarea-Modbus RTU Slave interface allows monitoring and control, fully bi-directionally, all the functioning parameters of Aquarea control from Modbus installations.
- Small dimensions. / Quick installation and possibility of hidden installation.
- External power not required.
- Direct connection to the unit.
- Fully Modbus interoperable. Control and monitoring, from any BMS or PLC Modbus Master, of internal variables of the indoor unit and error codes and indication.
- Aquarea unit can be controlled simultaneously by the remote control of the Aquarea unit and by Modbus Master device.

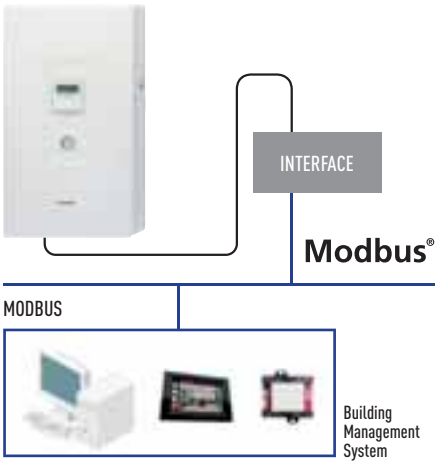





Aquarea Designer

Panasonic provides bespoke software helping system designers, installers and dealers to very quickly design and size systems, create wiring diagrams and issue bills of quantities at the push of a button.

This program allows HVAC designers, installers and distributors to identify the correct heat pump for a particular application from Panasonic's Aquarea range, calculate the savings compared to other heat sources and very quickly calculate CO_2 emissions.

Using Panasonic's Aquarea Designer, projects can be developed simply and easily, by either using the Quick Design or Expert Design options. Each allows the user to build up the project data in a simple step-by-step process and choose to output reports (in either Quick or Large formats) as HTML files or as print-outs. To create these useful reports, project data is input, including:

- Heated area
- Heating requirement
- Heating flow and return temperatures
- Climate data (from a simple drop-down menu) including outdoor temperature
- Type of hot water tank, storage capacity and hot water target temperature.

Aquarea Designer also means saving

Aquarea Designer will calculate the project's energy costs in terms of hot water, heating and pumping. It will show the equipment running times and calculate the COP (coefficient of performance). It then allows the designer to show clients a comparison with other equipment options such as heating by conventional gas-fired boilers, oil systems, wood, standard electric heating and electric night storage heaters. This compares running costs, initial investment costs and maintenance costs. The comparison can also be made for CO_2 emissions and savings.



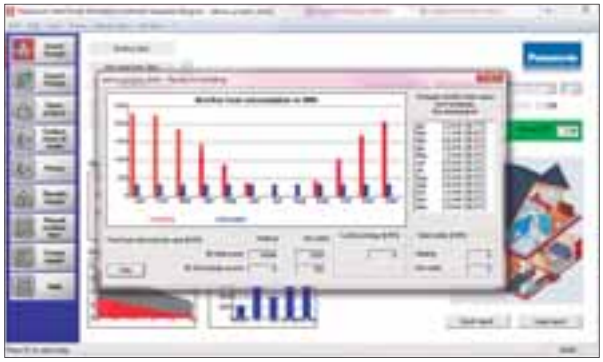



PRO Club: the professional website of Panasonic

Panasonic announces a new initiative for all professionals involved in the heating and cooling business - the Panasonic PRO Club (www.panasonicproclub.com). This exciting new portal provides distributors, installers, engineers and specifiers with a direct communication channel with one of the industry's major manufacturers. The website contains a wealth of information from the latest versions of Panasonic's Aquarea and Etherea Design Software, to Technical Documentation, Catalogues and Images for the company's wide range of heating and cooling systems - all in an easy to navigate and use website. Also, registered users will be able to access news regarding special promotions and take advantage of these offers, as well as access helpful business advice such as ideas and guidelines for showroom decoration or van livery featuring Panasonic logos and display material.

Donwload on www.panasonicproclub.com
or connect simply with your smartphone to the proclub using this QR:

Aquarea Line-Up!



FIGURE 1 (F1)



FIGURE 2 (F2)



FIGURE 3 (F3)



FIGURE 4 (F4)



FIGURE 5 (F5)



FIGURE 6 (F6)

				3kW	5kW	6kW	7kW	9kW	12kW	14kW	16kW
All in One	Bi-Bloc High performance	Single Phase	Heating and cooling	WH-ADC0309G3E5 WH-UD03EE5 (F1)	WH-ADC0309G3E5 WH-UD05EE5 (F1)		WH-ADC0309G3E5 WH-UD07FE5 (F1)	WH-ADC0309G3E5 WH-UD09FE5 (F1)	WH-ADC1216G6E5 WH-UD12FE5 (F1)	WH-ADC1216G6E5 WH-UD14FE5 (F1)	WH-ADC1216G6E5 WH-UD16FE5 (F1)
		Three Phase	Heating and cooling					WH-ADC0916G9E8 WH-UD09FE8 (F1)	WH-ADC0916G9E8 WH-UD12FE8 (F1)	WH-ADC0916G9E8 WH-UD14FE8 (F1)	WH-ADC0916G9E8 WH-UD16FE8 (F1)
	Bi-Bloc T-CAP	Single Phase	Heating and cooling					WH-ADC1216G6E5 WH-UX09FE5 (F1)	WH-ADC1216G6E5 WH-UX12FE5 (F1)		
		Three Phase	Heating and cooling					WH-ADC0916G9E8 WH-UX09FE8 (F1)	WH-ADC0916G9E8 WH-UX12FE8 (F1)		WH-ADC0916G9E8 WH-UX16FE8 (F1)
Aquarea High Performance for well insulated houses	Bi-Bloc	Single Phase	Heating only	WH-SDF03E3E5 WH-UD03EE5 (F2)	WH-SDF05E3E5 WH-UD05EE5 (F2)						
			Heating and cooling	WH-SDC03E3E5 WH-UD03EE5 (F2)	WH-SDC05E3E5 WH-UD05EE5 (F2)		WH-SDC07F3E5 WH-UD07FE5 (F4)	WH-SDC09F3E5 WH-UD09FE5 (F4)	WH-SDC12F6E5 WH-UD12FE5 (F5)	WH-SDC14F6E5 WH-UD14FE5 (F5)	WH-SDC16F6E5 WH-UD16CE5 (F5)
		Three Phase	Heating and cooling					WH-SDC09F3E8 WH-UD09FE8 (F5)	WH-SDC12F9E8 WH-UD12FE8 (F5)	WH-SDC14F9E8 WH-UD14FE8 (F5)	WH-SDC16F9E8 WH-UD16FE8 (F5)
	Mono-Bloc	Single Phase	Heating only			WH-MDF06E3E5 (F3)		WH-MDF09E3E5 (F3)	WH-MDF12C6E5 (F6)	WH-MDF14C6E5 (F6)	WH-MDF16C6E5 (F6)
			Heating and cooling		WH-MDC05F3E5 (F3)	WH-MDC06E3E5 (F3)		WH-MDC09E3E5 (F3)	WH-MDC12C6E5 (F6)	WH-MDC14C6E5 (F6)	WH-MDC16C6E5 (F6)
		Three Phase	Heating only					WH-MDF09C3E8 (F6)	WH-MDF12C9E8 (F6)	WH-MDF14C9E8 (F6)	WH-MDF16C9E8 (F6)
			Heating and cooling					WH-MDC09C3E8 (F6)	WH-MDC12C9E8 (F6)	WH-MDC14C9E8 (F6)	WH-MDC16C9E8 (F6)
Aquarea T-CAP for cold areas	Bi-Bloc	Single Phase	Heating and cooling					WH-SXC09F3E5 WH-UX09FE5 (F5)	WH-SXC12F6E5 WH-UX12FE5 (F5)		
		Three Phase	Heating and cooling					WH-SXC09F3E8 WH-UX09FE8 (F5)	WH-SXC12F9E8 WH-UX12FE8 (F5)		WH-SXC16F9E8 WH-UX16FE8 (F5)
	Mono-Bloc	Single Phase	Heating only					WH-MXF09D3E5 (F6)	WH-MXF12D6E5 (F6)		
			Heating and cooling					WH-MXC09D3E5 (F6)	WH-MXC12D6E5 (F6)		
		Three Phase	Heating only					WH-MXF09D3E8 (F6)	WH-MXF12D9E8 (F6)		
			Heating and cooling					WH-MXC09D3E8 (F6)	WH-MXC12D9E8 (F6)		
Aquarea HT for retrofit	Bi-Bloc	Single Phase	Heating only					WH-SHF09F3E5 WH-UH09FE5 (F5)	WH-SHF12F6E5 WH-UH12FE5 (F5)		
		Three Phase	Heating only					WH-SHF09F3E8 WH-UH09FE8 (F5)	WH-SHF12F9E8 WH-UH12FE8 (F5)		
	Mono-Bloc	Single Phase	Heating only					WH-MHF09D3E5 (F6)	WH-MHF12D6E5 (F6)		
		Three Phase	Heating only					WH-MHF09D3E8 (F6)	WH-MHF12D9E8 (F6)		

Low connectivity : control of 3 way valve, tank heater On/Off signal, tank thermostat signal reception, On/Off from external control, weekly timer. High connectivity : Low connectivity + solar panels connection, room thermostat connection.
* Cooling mode activation possible by software. This activation can only be done by service partner.

A class pump

SEASONAL EFFICIENCY

Aquarea All in One Bi-Bloc (Inverter)



HIGH PERFORMANCE	3kW	5kW	7kW	9kW	12kW	14kW	16kW
T-CAP (HIGH CAPACITY FOR COLD AREAS)				9kW	12kW		16kW

Aquarea Bi-Bloc (Inverter)



HIGH PERFORMANCE	3kW	5kW	7kW	9kW	12kW	14kW	16kW
T-CAP (HIGH CAPACITY FOR COLD AREAS)				9kW	12kW		16kW
AQUAREA HT				9kW	12kW		

Aquarea Mono-Bloc (Inverter)



HIGH PERFORMANCE	5kW	6kW	9kW	12kW	14kW	16kW
T-CAP (HIGH CAPACITY FOR COLD AREAS)			9kW	12kW		
AQUAREA HT			9kW	12kW		

* Not all products have A class pump.

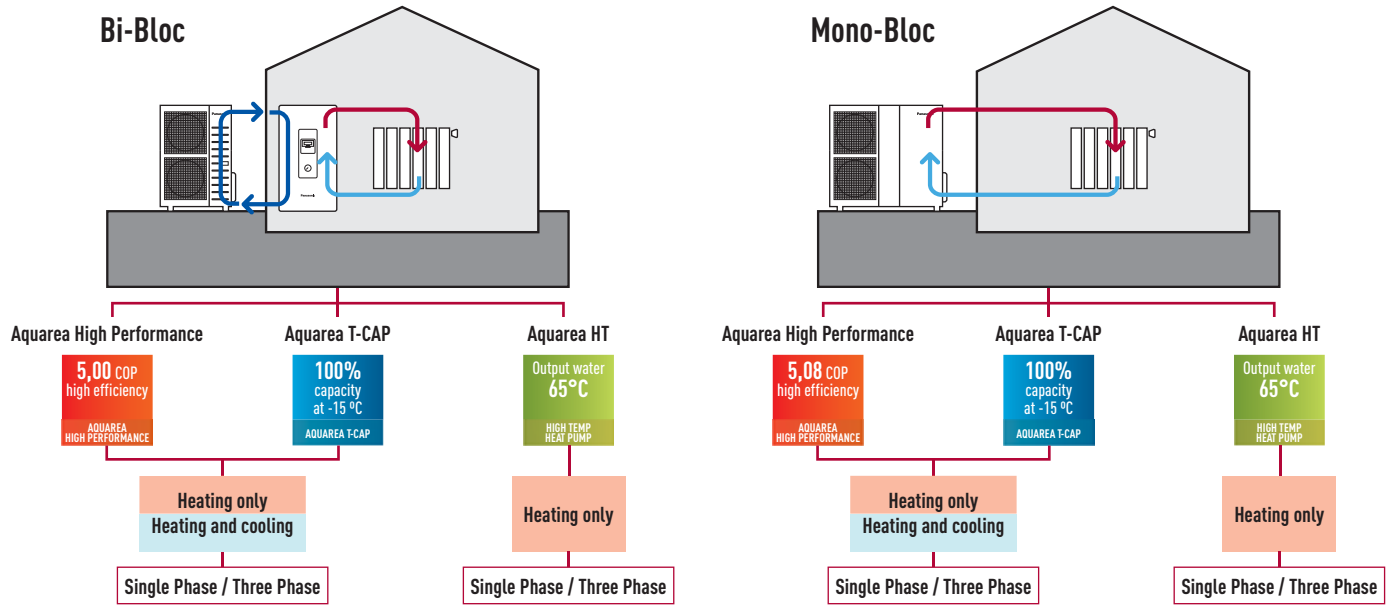

AQUAREA
ALL IN ONE HIGH PERFORMANCE
BI-BLOC SINGLE PHASE HEATING AND COOLING





WH-UD03EE5
WH-UD05EE5



WH-UD07FE5
WH-UD09FE5



WH-UD12FE5
WH-UD14FE5
WH-UD16FE5

WH-UD09FE8
WH-UD12FE8
WH-UD14FE8
WH-UD16FE8

Panasonic has developed a highly efficient solution, easy to install.

Technical focus

- Space saving: 1827 x 600 x 720 (H x W x D)
- Reduce installation costs
- Piping on the bottom of the All in One (easy to install)
- Reduce timing and minimize installation errors
- Easy remote control to set up

- Electrical connections on the front
- Reduce installation spaces
- All piping connections at bottom of the indoor unit
- Easier installation and maintenance
- New remote control functions

* Cooling mode activation possible by software. This activation can only be done by service partner.

Optional Controllers



Aquarea Manager with LCD.
PAW-HPM1



Aquarea Manager touch screen.
PAW-HPMED for HPM



Wireless LCD room thermostat with weekly timer.
PAW-A2W-RTWIRELESS

				Single Phase (Power to indoor)							Three Phase (Power to indoor)			
Kit				KIT-ADC3GE5	KIT-ADC5GE5	KIT-ADC7GE5	KIT-ADC9GE5	KIT-ADC12GE5	KIT-ADC14GE5	KIT-ADC16GE5	KIT-ADC9GE8	KIT-ADC12GE8	KIT-ADC14GE8	KIT-ADC16GE8
Indoor unit				WH-ADC0309G3E5				WH-ADC1216G6E5			WH-ADC0916G9E8			
Outdoor unit				WH-UD03EE5	WH-UD05EE5	WH-UD07FE5	WH-UD09FE5	WH-UD12FE5	WH-UD14FE5	WH-UD16FE5	WH-UD09FE8	WH-UD12FE8	WH-UD14FE8	WH-UD16FE8
Heating capacity at +7°C			kW	3,20	5,00	7,00	9,00	12,00	14,00	16,00	9,00	12,00	14,00	16,00
COP at +7°C (heating water at 35°C)				5,00	4,63	4,46	4,13	4,75	4,57	4,28	4,85	4,75	4,57	4,28
Heating capacity at +2°C (heating water at 35°C)			kW	3,20	4,20	6,55	6,70	11,40	12,40	13,00	9,00	11,40	12,40	13,00
COP at +2°C (heating water at 35°C)				3,56	3,11	3,34	3,13	3,45	3,36	3,29	3,59	3,45	3,36	3,29
Heating capacity at -7°C			kW	3,20	4,20	5,15	5,90	10,00	10,70	11,40	9,00	10,00	10,70	11,40
COP at -7°C				2,69	2,59	2,68	2,52	2,74	2,71	2,68	2,85	2,74	2,71	2,68
Cooling capacity at 35°C			kW	3,20	4,50	6,00	7,00	10,00	11,50	12,20	7,00	10,00	11,50	12,20
EER at 35°C (cooling water at 7/12°C)				3,08	2,69	2,63	2,43	2,81	2,64	2,57	3,17	2,81	2,64	2,57
Indoor unit														
Dimensions	H x W x D		mm	1.827x600x720	1.827x600x720	1.827x600x720	1.827x600x720	1.827x600x720	1.827x600x720	1.827x600x720	1.827x600x720	1.827x600x720	1.827x600x720	1.827x600x720
Weight			kg											
Hidrokit in the indoor unit	Water pipe connector		mm	R1 1/4	R1 1/4	R1 1/4	R1 1/4	R1 1/4	R1 1/4	R1 1/4	R1 1/4	R1 1/4	R1 1/4	R1 1/4
	A class Pump	No. of Speed		7	7	7	7	7	7	7	7	7	7	7
		Input power (Min/Max.)	W	Min: 21 W at 10l/min / Max: 135 W at 53.8l/min										
	Heating water flow (ΔT=5 K. 35°C)		l/min	9,2	14,3	20,1	25,8	34,4	40,1	45,9	25,8	34,4	40,1	45,9
	Capacity of integrated electric heater		kW	3	3	3	3	6	6	6	3	9	9	9
	Input Power	Heating / Cooling	kW	0,64 / 1,04	1,08 / 1,67	1,59 / 2,30	2,20 / 2,90	2,57 / 3,60	3,11 / 4,40	3,78 / 4,80	1,90 / 2,25	2,57 / 3,55	3,11 / 4,40	3,78 / 4,80
	Running current	Heating / Cooling	A	3,00 / 4,8	5,00 / 7,6	7,30 / 10,40	10,10 / 13,10	11,70 / 16,10	14,10 / 19,70	17,10 / 21,50	2,90 / 3,40	3,90 / 5,30	4,70 / 6,60	5,70 / 7,20
	Current 1 / Current 2		A			21,0 / 26,0	22,9 / 26,0	24,0 / 26,0	25,0 / 26,0	26,0 / 26,0	11,8 / 13,0	8,8 / 13,0	9,4 / 13,0	9,9 / 13,0
	Recommended Fuse		A	30 / 15	30 / 15	30 / 30	30 / 30	30 / 30	30 / 30	30 / 30	16 / 16	16 / 16	16 / 16	16 / 16
	Recommended power cable section		mm²	4,0 / 2,5	4,0 / 2,5	4,0 / 4,0	4,0 / 4,0	4,0 / 4,0	4,0 / 4,0	4,0 / 4,0	2,5 / 2,5	2,5 / 2,5	2,5 / 2,5	2,5 / 2,5
Tank in the indoor unit	Water volume		L	200	200	200	200	200	200	200	200	200	200	200
	Maximum water temperature		°C	65	65	65	65	65	65	65	65	65	65	65
	Material inside tank			Stainless steel	Stainless steel	Stainless steel	Stainless steel	Stainless steel	Stainless steel	Stainless steel	Stainless steel	Stainless steel	Stainless steel	Stainless steel
	Exchange surface		m²	2,1	2,1	2,1	2,1	2,1	2,1	2,1	2,1	2,1	2,1	2,1
	Warranty of the stainless steel tank			10 years	10 years	10 years	10 years	10 years	10 years	10 years	10 years	10 years	10 years	10 years
	Maintenance required on the tank			No	No	No	No	No	No	No	No	No	No	No
Outdoor unit														
Sound pressure level / Sound power level			dB(A) / dB	47 / 65	48 / 66	48 / 66	49 / 67	50 / 67	51 / 68	53 / 70	49 / 65	50 / 66	51 / 71	53 / 68
Dimensions / Weight	H x W x D		mm / kg	622 x 824 x 298 / 39		795 x 900 x 320 / 66		1.340 x 900 x 320 / 106						
Pipe diameter	Liquid / Gas		mm (Inch)	6,35 (1/4) / 12,7 (1/2)		6,35 (1/4) / 15,88 (5/8)		9,52 (3/8) / 15,88 (5/8)						
Refrigerant / Additional gas amount (R410A)			kg / g/m	1,20 / 20	1,20 / 20	1,45 / 30	1,45 / 30	2,75 / 50	2,75 / 50	2,75 / 50	2,75 / 50	2,75 / 50	2,75 / 50	2,75 / 50
Pipe length range			m	3-15	3-15	3 – 30	3 – 30	3 – 30	3 – 30	3 – 30	3 – 30	3 – 30	3 – 30	3 – 30
Pipe length for nominal capacity / additional gas			m	7 / 10	7 / 10	7 / 10	7 / 10	7 / 10	7 / 10	7 / 10	7 / 10	7 / 10	7 / 10	7 / 10
Elevation dif. (in/out)			m	5	5	20	20	20	20	20	20	20	20	20
Operation range	Outdoor ambient		°C	-20 to 35	-20 to 35	-20 to 35	-20 to 35	-20 to 35	-20 to 35	-20 to 35	-20 to 35	-20 to 35	-20 to 35	-20 to 35
Water outlet at -2/-7/-15			°C	20 - 55 / 5 – 20	20 - 55 / 5 – 20	20 – 55 / 5 – 20	20 – 55 / 5 – 20	25 – 55 / 5 – 20	25 – 55 / 5 – 20	25 – 55 / 5 – 20	25 – 55 / 5 – 20	25 – 55 / 5 – 20	25 – 55 / 5 – 20	25 – 55 / 5 – 20

Internet Control Ready (INTERNET CONTROL) · 5,00 COP high efficiency (AQUAREA HIGH PERFORMANCE) · High efficiency heating (INVERTER+) · Environmentally friendly refrigerant (R410A) · Down to -20°C in heating mode (OUTDOOR TEMPERATURE) · Boiler connection (RETROFIT) · Solar panels connection (SOLAR KIT) · Domestic hot water (DHW) · Easy control by BMS (CONNECTIVITY) · 5 year compressor warranty

INTERNET CONTROL READY: Optional.

COP classification is at 230 V only in accordance with EU directive 2003/32/EC. Sound pressure measured at 1 m from the outdoor unit and at 1.5 m height. Performance in agreement with EN14511. 1) Insulated tested under EN12897.
* Preliminary design. Significant changes may occur.

AQUAREA
ALL IN ONE T-CAP
BI-BLOC SINGLE PHASE / THREE PHASE
HEATING AND COOLING



All the benefits of the T-CAP All in ONE unit!
Panasonic has developed a highly efficient solution, easy to install.

Technical focus
- Space saving: 1827 x 600 x 720 (H x W x D)
- Reduce installation costs
- Piping on the bottom of the All in One (easy to install)
- Reduce timing and minimize installation errors
- Easy remote control to set up
- Electrical connections on the front
- Reduce installation spaces
- All piping connections at bottom of the indoor unit
- Easier installation and maintenance
- 1 phase and 3 phase
- New remote control functions



WH-UX09FE5 **WH-UX16FE8**
WH-UX12FE5 **WH-UX09FE8**
WH-UX12FE8

Optional Controllers



Aquarea Manager with LCD.
PAW-HPM1



Aquarea Manager touch screen.
PAW-HPMED for HPM



Wireless LCD room thermostat with weekly timer.
PAW-A2W-RTWIRELESS

				Single Phase (Power to indoor)		Three Phase (Power to indoor)		
Kit				**KIT-AXC9GE5**	**KIT-AXC12GE5**	**KIT-AXC9GE8**	**KIT-AXC12GE8**	**KIT-AXC16GE8**
Indoor unit				**WH-ADC1216G6E5**	**WH-ADC1216G6E5**	**WH-ADC0916G9E8**	**WH-ADC0916G9E8**	**WH-ADC0916G9E8**
Outdoor unit				**WH-UX09FE5**	**WH-UX12FE5**	**WH-UX09FE8**	**WH-UX12FE8**	**WH-UX16FE8**
Heating capacity at +7°C			kW	9,00	12,00	9,00	12,00	16,00
COP at +7°C (heating water at 35°C)				4,85	4,75	4,85	4,75	4,28
Heating capacity at +2°C (heating water at 35°C)			kW	9,00	12,00	9,00	12,00	16,00
COP at +2°C (heating water at 35°C)				3,59	3,44	3,59	3,44	3,10
Heating capacity at -7°C			kW	9,00	12,00	9,00	12,00	16,00
COP at -7°C				2,85	2,72	2,85	2,72	2,49
Cooling capacity at 35°C			kW	7,00	10,00	7,00	10,00	12,20
EER at 35°C (cooling water at 7/12°C)				3,17	2,81	3,17	2,81	2,57
Indoor unit								
Dimensions	H x W x D		mm	1.827 x 600 x 720	1.827 x 600 x 720	1.827 x 600 x 720	1.827 x 600 x 720	1.827 x 600 x 720
Weight			kg					
Hidrokit in the indoor unit	Water pipe connector			R 1 ¼	R 1 ¼	R 1 ¼	R 1 ¼	R 1 ¼
	A class Pump	No. of Speed		7	7	7	7	7
		Input power (Min/Max.)	W	Min: 21 W at 10l/min / Max: 135 W at 53.8l/min				
	Heating water flow (ΔT=5 K. 35°C)		l/min	25,8	34,4	25,8	34,4	45,9
	Capacity of integrated electric heater		kW	6	6	9	9	9
	Input Power	Heating / Cooling	kW	1,90	2,57	1,90	2,57	2,57
	Running current	Heating / Cooling	A	8,8 (10,4)	11,9 (16,7)	2,9 (3,4)	3,9 (5,4)	7,2
	Current 1 / Current 2		A	25,0 / 26,0	29,0 / 26,0	14,7 / 13,0	11,9 / 13,0	15,5 / 13,0
	Recommended Fuse		A	30 / 30	30 / 30	16 / 16	16 / 16 / 16	16 / 16
	Recommended power cable section		mm²	4,0 / 4,0	4,0 / 4,0	2,5 / 2,5	2,5 / 2,5	2,5 / 2,5
Tank in the indoor unit	Water volume		L	200	200	200	200	200
	Maximum water temperature		°C	65	65	65	65	65
	Material inside tank			Stainless steel	Stainless steel	Stainless steel	Stainless steel	Stainless steel
	Exchange surface		m²	2,1	2,1	2,1	2,1	2,1
	Warranty of the Stainless steel tank			10 years	10 years	10 years	10 years	10 years
	Maintenance required on the tank			No	No	No	No	No
Outdoor unit								
Sound pressure level / Sound power level			dB(A) / dB	49 / 66	50 / 67	49 / 66	50 / 67	50 / 67
Dimensions / Weight	H x W x D		mm / kg	1.340 x 900 x 320 / 107	1.340 x 900 x 320 / 107	1.340 x 900 x 320 / 110	1.340 x 900 x 320 / 110	1.340 x 900 x 320 / 110
Pipe diameter	Liquid / Gas		mm (Inch)	9,52 (3/8) / 15,88 (5/8)	9,52 (3/8) / 15,88 (5/8)	9,52 (3/8) / 15,88 (5/8)	9,52 (3/8) / 15,88 (5/8)	9,52 (3/8) / 15,88 (5/8)
Refrigerant / Additional gas amount (R410A)			kg / g/m	3,10 / 50	3,10 / 50	3,10 / 50	3,10 / 50	2,90 / 50
Pipe length range			m	3 – 30	3 – 30	3 – 30	3 – 30	3 – 30
Pipe length for nominal capacity / additional gas			m	7 / 10	7 / 10	7 / 10	7 / 10	7 / 10
Elevation dif. (in/out)			m	20	20	20	20	20
Operation range	Outdoor ambient		°C	-20 to 35	-20 to 35	-20 to 35	-20 to 35	-20 to 35
Water outlet at -2/-7/-15			°C	25 – 55 / 5 – 20	25 – 55 / 5 – 20	25 – 55 / 5 – 20	25 – 55 / 5 – 20	25 – 55 / 5 – 20

Internet Control Ready (INTERNET CONTROL) · 4.85 COP high efficiency (AQUAREA HIGH PERFORMANCE) · High efficiency heating (INVERTER+) · Environmentally friendly refrigerant (R410A) · Down to -20°C in heating mode (OUTDOOR TEMPERATURE) · Boiler connection (RETROFIT) · Solar panels connection (SOLAR KIT) · Domestic hot water (DHW) · Easy control by BMS (CONNECTIVITY) · 5 year compressor warranty

INTERNET CONTROL READY: Optional.

COP classification is at 230 V only in accordance with EU directive 2003/32/EC. Sound pressure measured at 1 m from the outdoor unit and at 1.5 m height. Performance in agreement with EN14511. 1) Insulated tested under EN12897.
* Preliminary design. Significant changes may occur.

AQUAREA
HIGH PERFORMANCE
BI-BLOC SINGLE PHASE
HEATING ONLY - SDF
HEATING AND COOLING - SDC
3 AND 5KW



The 3 and 5kW is specially designed for low energy homes and achieves an impressive COP of 5 (on the 3.2kW).
Thanks to the system's high degree of technology and advanced control, it is able to maintain a high capacity and efficiency even at -7°C and -15°C. The Aquarea's software is optimised to the requirements of low consumption homes in order to maximise energy efficiency. Whatever the weather, Aquarea can work even at -20°C. The compact design of the outdoor unit makes installation very easy.

Technical focus
- Efficient control of room temperature based on the outdoor temperature, indoor temperature using the Aquarea Manager.
- Super efficient: COP of 5 in the 3.2kW!
- A Class Pump
- Special software for low consumption homes with minimum output temperature: 20°C
- Works down to -20°C
- Automatic Air purge valve
- Display of the compressor frequency



WH-UD03EE5
WH-UD05EE5

Optional Controllers



Aquarea Manager with LCD.
PAW-HPM1



Aquarea Manager touch screen.
PAW-HPMED for HPM



Wireless LCD room thermostat with weekly timer.
PAW-A2W-RTWIRELESS

			Single Phase Heating Only		Single Phase Heating and Cooling	
Kit			**KIT-WF03C3E5**	**KIT-WF05C3E5**	**KIT-WC03C3E5**	**KIT-WC05C3E5**
Indoor unit			**WH-SDF03E3E5**	**WH-SDF05E3E5**	**WH-SDC03E3E5**	**WH-SDC05E3E5**
Outdoor unit			**WH-UD03EE5**	**WH-UD05EE5**	**WH-UD03EE5**	**WH-UD05EE5**
Heating capacity at +7°C		kW	3,20	5,00	3,20	5,00
COP at +7°C (heating water at 35°C)			5,00	4,63	5,00	4,63
Heating capacity at +2°C (heating water at 35°C)		kW	3,20	4,20	3,20	4,20
COP at +2°C (heating water at 35°C)			3,56	3,11	3,56	3,11
Heating capacity at -7°C		kW	3,20	4,20	3,20	4,20
COP at -7°C			2,69	2,59	2,69	2,59
Cooling capacity at 35°C		kW	-	-	3,20	4,50
EER at 35°C (cooling water at 7/12°C)			-	-	3,08	2,69
Indoor unit						
Dimensions	H x W x D	mm	892 x 502 x 353	892 x 502 x 353	892 x 502 x 353	892 x 502 x 353
Weight		kg	43	43	44	44
Water pipe connector		mm	28	28	28	28
A class Pump	No. of Speed		Variable Speed	Variable Speed	Variable Speed	Variable Speed
	Input power (Min/Max.)	W	Min: 21 W at 10l/min / Max: 135 W at 53.8l/min			
Heating water flow (ΔT=5 K. 35°C)		l/min	9,2	14,3	9,2	14,3
Capacity of integrated electric heater		kW	3	3	3	3
Input Power	H / C	kW	0,64 / 1,04	1,08 / 1,67	0,64 / 1,04	1,08 / 1,67
Running and Starting current	H / C	A	3 / 4,8	5 / 7,6	3 / 4,8	5 / 7,6
Current 1 / Current 2		A	11,0 / 26,0	12,0 / 26,0	11,0 / 26,0	12,0 / 26,0
Recommended Fuse		A	15 / 30	15 / 30	15 / 30	15 / 30
Recommended power cable section		mm²	2,5 / 4,0	2,5 / 4,0	2,5 / 4,0	2,5 / 4,0
Outdoor unit						
Sound pressure level		dB(A)	47	48	47	48
Sound power level		dB	65	66	65	66
Dimensions	H x W x D	mm	622 x 824 x 298	622 x 824 x 298	622 x 824 x 298	622 x 824 x 298
Weight		kg	39	39	39	39
Pipe diameter	Liquid	mm (Inch)	6,35 (1/4)	6,35 (1/4)	6,35 (1/4)	6,35 (1/4)
	Gas	mm (Inch)	12,7 (1/2)	12,7 (1/2)	12,7 (1/2)	12,7 (1/2)
Refrigerant (R410A)		kg	1,20	1,20	1,20	1,20
Pipe length range		m	3-15	3-15	3-15	3-15
Pipe length for nominal capacity		m	7	7	7	7
Pipe length for additional gas		m	10	10	10	10
Additional gas amount (R410A)		g/m	20	20	20	20
Elevation difference (in/out)		m	5	5	5	5
Operation range	Outdoor ambient	°C	-20 to 35	-20 to 35	-20 to 35	-20 to 35
Water outlet at -2/-7/-15		°C	20 - 55	20 - 55	20 - 55	20 - 55

COP classification is at 230 V only in accordance with EU directive 2003/32/EC. Sound pressure measured at 1 m from the outdoor unit and at 1.5 m height. Performance in agreement with EN14511.

Internet Control Ready (INTERNET CONTROL) · 5,00 COP high efficiency (AQUAREA HIGH PERFORMANCE) · High efficiency heating (INVERTER+) · Environmentally friendly refrigerant (R410A) · Down to -20°C in heating mode (OUTDOOR TEMPERATURE) · Boiler connection (RETROFIT) · Solar panels connection (SOLAR KIT) · Domestic hot water (DHW) · Easy control by BMS (CONNECTIVITY) · 5 year compressor warranty

INTERNET CONTROL READY: Optional.

AQUAREA
HIGH PERFORMANCE
BI-BLOC SINGLE PHASE / THREE PHASE
HEATING AND COOLING - SDC





WH-UD07FE5
WH-UD09FE5

WH-UD12FE5
WH-UD14FE5
WH-UD16FE5

WH-UD09FE8
WH-UD12FE8
WH-UD14FE8
WH-UD16FE8

The Aquarea SDC range adapts well in an existing install with a boiler backup, and in a new application with underfloor heating, low temperature radiators or even fan-coil heaters.
This range can also be connected to a solar kit in order to increase efficiency and minimize the impact on the ecosystem. Finally, it is possible to connect a thermostat for better heating and cooling control and management.

Technical focus
- **NEW!** New remote control functions
- Efficient control of room temperature based on the outdoor temperature, indoor temperature using the Aquarea Manager.
- Optional Smartphone control
- Range from 7 to 16kW, Single and Three Phase
- Maximum hydraulic module output temperature: 55°C
- Works down to -20°C
- Maximum 30 m rise between the outdoor unit and the hydraulic module
- Cooling temperature range 5–20°C

Optional Controllers


Aquarea Manager with LCD.
PAW-HPM1


Aquarea Manager touch screen.
PAW-HPMED for HPM


Wireless LCD room thermostat with weekly timer.
PAW-A2W-RTWIRELESS

			Single Phase (Power to indoor)					Three Phase (Power to indoor)			
Kit			KIT-WC07F3E5[1]	KIT-WC09F3E5[1]	KIT-WC12F6E5[2]	KIT-WC14F6E5[2]	KIT-WC16F6E5[2]	KIT-WC09F3E8[3]	KIT-WC12F9E8[3]	KIT-WC14F9E8[3]	KIT-WC16F9E8[3]
Indoor unit			WH-SDC07F3E5	WH-SDC09F3E5	WH-SDC12F6E5	WH-SDC14F6E5	WH-SDC16F6E5	WH-SDC09F3E8	WH-SDC12F9E8	WH-SDC14F9E8	WH-SDC16F9E8
Outdoor unit			WH-UD07FE5	WH-UD09FE5	WH-UD12FE5	WH-UD14FE5	WH-UD16FE5	WH-UD09FE8	WH-UD12FE8	WH-UD14FE8	WH-UD16FE8
Heating capacity at +7°C		kW	7,00	9,00	12,0	14,00	16,00	9,00	12,00	14,00	16,00
COP at +7°C (heating water at 35°C)			4,46	4,13	4,74	4,56	4,28	4,84	4,14	4,56	4,28
Heating capacity at +2°C		kW	6,55	6,70	11,40	12,40	13,00	9,00	11,40	12,40	16,00
COP at +2°C (heating water at 35°C)			3,34	3,13	3,44	3,36	3,28	3,59	3,44	3,36	3,28
Heating capacity at -7°C		kW	5,15	5,90	10,00	10,70	11,40	9,00	10,00	10,70	11,40
COP at -7°C (heating water at 35°C)			2,68	5,52	2,73	2,70	2,68	2,85	2,23	2,70	2,68
Cooling capacity at 35°C (cooling water at 7°C)		kW	6,00	7,00	10,00	11,50	12,20	7,00	10,00	11,50	12,20
EER at 35°C (cooling water at 7°C)			2,61	2,41	2,81	2,64	2,56	3,17	2,81	2,64	2,56
Indoor unit											
Dimensions	H x W x D	mm	892 x 502 x 353	892 x 502 x 353	892 x 502 x 353	892 x 502 x 353	892 x 502 x 353	892 x 502 x 353	892 x 502 x 353	892 x 502 x 353	892 x 502 x 353
Weight		kg	43	43	45	46	46	46	46	47	47
Water pipe connector			R1 1/4	R1 1/4	R1 1/4	R1 1/4	R1 1/4	R1 1/4	R1 1/4	R1 1/4	R1 1/4
Pump	No. of Speed		7	7	7	7	7	7	7	7	7
	Input power (Min/Max.)	W	Min: 21 W at 10l/min / Max: 135 W at 53.8l/min								
Heating water flow (ΔT=5 K. 35°C)		l/min	20,1	25,8	34,4	40,1	45,9	25,8	34,4	40,1	45,9
Capacity of integrated electric heater		kW	3	3	6	6	6	3	9	9	9
Input Power	Heating / Cooling	kW	1,59 / 2,30	2,20 / 2,90	2,53 / 3,56	3,07 / 4,36	3,74 / 4,76	1,86 / 2,21	2,53 / 3,56	3,07 / 4,36	3,74 / 4,76
Running and Starting current	Heating / Cooling	A	7,30 / 10,40	10,10 / 13,10	11,50 / 16,00	13,90 / 19,50	16,90 / 21,30	2,90 / 3,40	3,90 / 5,30	4,70 / 6,60	5,70 / 7,20
Current 1 / Current 2		A	21,0 / 26,0	22,9 / 26,0	24,0 / 26,0	25,0 / 26,0	26,0 / 26,0	11,8 / 13,0	8,8 / 13,0	9,4 / 13,0	9,9 / 13,0 / -
Recommended Fuse		A	30 / 30	30 / 30	30 / 30	30 / 30	30 / 30	16 / 16	16 / 16	16 / 16	16 / 16
Recommended power cable section		mm²	4,0 / 4,0	4,0 / 4,0	4,0 / 4,0	4,0 / 4,0	4,0 / 4,0	2,5 / 2,5	2,5 / 2,5	2,5 / 2,5	2,5 / 2,5
Outdoor unit											
Sound pressure level		dB(A)	48	49	50	51	53	49	50	51	53
Sound power level		dB	66	67	67	68	70	66	67	68	70
Dimensions / Weight	H x W x D	mm / kg	795 x 900 x 320 / 66		1.340 x 900 x 320 / 101						
Pipe diameter	Liquid / Gas	mm (Inch)	6,35 (1/4) / 15,88 (5/8)		9,52 (3/8) / 15,88 (5/8)						
Refrigerant (R410A)		kg	1,45	1,45	2,55	2,55	2,55	2,55	2,55	2,55	2,55
Pipe length range		m	3 – 30	3 – 30	3 – 30	3 – 30	3 – 30	3 – 30	3 – 30	3 – 30	3 – 30
Pipe length for nominal capacity		m	7	7	7	7	7	7	7	7	7
Pipe length for additional gas		m	10	10	10	10	10	10	10	10	10
Additional gas amount (R410A)		g/m	30	30	50	50	50	50	50	50	50
Elevation difference (in/out)		m	20	20	20	20	20	20	20	20	20
Operation range	Outdoor ambient	°C	-20 to 35	-20 to 35	-20 to 35	-20 to 35	-20 to 35	-20 to 35	-20 to 35	-20 to 35	-20 to 35
Water outlet at -2/-7/-15	Heating / Cooling	°C	25 – 55 / 5 – 20	25 – 55 / 5 – 20	25 – 55 / 5 – 20	25 – 55 / 5 – 20	25 – 55 / 5 – 20	25 – 55 / 5 – 20	25 – 55 / 5 – 20	25 – 55 / 5 – 20	25 – 55 / 5 – 20

COP classification is at 230 V only in accordance with EU directive 2003/32/EC. Sound pressure measured at 1 m from the outdoor unit and at 1.5 m height. Performance in agreement with EN14511.
1) Available from September 2014. 2) Available from May 2014. 3) Available from June 2014.

Internet Control Ready (INTERNET CONTROL) · 4.84 COP high efficiency (AQUAREA HIGH PERFORMANCE) · High efficiency heating (INVERTER+) · Environmentally friendly refrigerant (R410A) · Down to -20°C in heating mode (OUTDOOR TEMPERATURE) · Boiler connection (RETROFIT) · Solar panels connection (SOLAR KIT) · Domestic hot water (DHW) · Easy control by BMS (CONNECTIVITY) · 5 year compressor warranty

INTERNET CONTROL READY: Optional.

AQUAREA T-CAP

BI-BLOC SINGLE PHASE / THREE PHASE HEATING AND COOLING - SXC





WH-UX09FE5 WH-UX09FE8
WH-UX12FE5 WH-UX12FE8
WH-UX16FE8

The new SXC is ideal for residential properties which don't have an external boiler and require a maintained capacity level.
T-CAP stands for Total Capacity. This new line-up is able to maintain the same nominal capacity even at -15°C without the help of an electrical booster heater. T-CAP is also able to provide extremely high efficiency, whatever the outside temperature or the water temperature. The SXC adapts well in an existing install with a boiler backup, and in a new application with underfloor heating, low temperature radiators or even fan-coil heaters. This Range can also be connected to a solar kit in order to increase efficiency and minimize the impact on the ecosystem. Finally, it is possible to connect a thermostat for even better heating or cooling control and management.

Technical focus
- **NEW!** 16kW Model: Maintains 16kW capacity at outdoor temperatures down to -15°C
- **NEW!** New remote control functions
- Efficient control of room temperature based on the outdoor temperature, indoor temperature using the Aquarea Manager.
- Optional Smartphone control
- Range from 9 to 16kW, Single and Three Phase
- Maximum hydraulic module output temperature: 55°C
- Works down to -20°C (Cooling temperature range 5–20°C)
- Constant capacity at outdoor temperatures down to -15°C
- Maximum 20 m rise between the outdoor unit and the hydraulic module

Optional Controllers


Aquarea Manager with LCD.
PAW-HPM1


Aquarea Manager touch screen.
PAW-HPMED for HPM


Wireless LCD room thermostat with weekly timer.
PAW-A2W-RTWIRELESS

			Single Phase (Power to indoor)		Three Phase (Power to indoor)		
Kit			**KIT-WXC09F3E5**	**KIT-WXC12F6E5**	**KIT-WXC09F3E8**	**KIT-WXC12F9E8**	**KIT-WXC16F9E8**
Indoor unit			**WH-SXC09F3E5**	**WH-SXC12F6E5**	**WH-SXC09F3E8**	**WH-SXC12F9E8**	**WH-SXC16F9E8**
Outdoor unit			**WH-UX09FE5**	**WH-UX12FE5**	**WH-UX09FE8**	**WH-UX12FE8**	**WH-UX16FE8**
Heating capacity at +7°C (heating water at 35°C)		kW	9,00	12,00	9,00	12,00	16,00
COP at +7°C (heating water at 35°C)			4,84	4,74	4,84	4,74	4,28
Heating capacity at +2°C (heating water at 35°C)		kW	9,00	12,00	9,00	12,00	16,00
COP at +2°C (heating water at 35°C)			3,59	3,44	3,59	3,44	3,10
Heating capacity at -7°C (heating water at 35°C)		kW	9,00	12,00	9,00	12,00	16,00
COP at -7°C (heating water at 35°C)			2,85	2,72	2,85	2,72	2,49
Cooling capacity at 35°C (cooling water at 7°C)		kW	7,00	10,00	7,00	10,00	12,20
EER at 35°C (cooling water at 7°C)			3,17	2,81	3,17	2,81	2,57
Indoor unit							
Dimensions	H x W x D	mm	892 x 502 x 353	892 x 502 x 353	892 x 502 x 353	892 x 502 x 353	892 x 502 x 353
Weight		kg	44	45	45	46	52
Water pipe connector			R 1 ¼	R 1 ¼	R 1 ¼	R 1 ¼	R 1 ¼
Pump	No. of Speed		7	7	7	7	7
	Input power (Min/Max.)	W	Min: 21 W at 10l/min / Max: 135 W at 53.8l/min				
Heating water flow (ΔT=5 K. 35°C)		l/min	25,8	34,4	25,8	34,4	45,9
Capacity of integrated electric heater		kW	3	6	3	9	9
Input Power		kW	1,86	2,53	1,86	2,53	3,74
Starting Current		A	10,2	16,5	3,4	5,4	7,2
Current 1 / Current 2		A	25,0 / 26,0	29,0 / 26,0	14,7 / 13,0	11,9 / 13,0	15,5 / 13,0
Recommended Fuse		A	30 / 30	30 / 30	16 / 16	16 / 16	16 / 16
Recommended power cable section		mm²	4,0 / 4,0	4,0 / 4,0	2,5 / 2,5	2,5 / 2,5	2,5 / 2,5
Outdoor unit							
Sound pressure level		dB(A)	49	50	49	50	53
Sound power level		dB	66	67	66	67	70
Dimensions / Weight	H x W x D	mm / kg	1.340 x 900 x 320 / 107	1.340 x 900 x 320 / 107	1.340 x 900 x 320 / 109	1.340 x 900 x 320 / 109	1.340 x 900 x 320 / 110
Pipe diameter	Liquid / Gas	mm (Inch)	9,52 (3/8) / 15,88 (5/8)	9,52 (3/8) / 15,88 (5/8)	9,52 (3/8) / 15,88 (5/8)	9,52 (3/8) / 15,88 (5/8)	9,52 (3/8) / 15,88 (5/8)
Refrigerant (R410A)		kg	2,85	2,85	2,85	2,85	2,90
Pipe length range		m	3 – 30	3 – 30	3 – 30	3 – 30	3 – 30
Pipe length for nominal capacity		m	7	7	7	7	7
Pipe length for additional gas		m	10	10	10	10	10
Additional gas amount (R410A)		g/m	50	50	50	50	50
Elevation difference (in/out)		m	20	20	20	20	20
Operation range	Outdoor ambient	°C	-20 to 35	-20 to 35	-20 to 35	-20 to 35	-20 to 35
Water outlet at -2/-7/-15	Heating / Cooling	°C	25 – 55 / 5 – 20	25 – 55 / 5 – 20	25 – 55 / 5 – 20	25 – 55 / 5 – 20	25 – 55 / 5 – 20

COP classification is at 230 V only in accordance with EU directive 2003/32/EC. Sound pressure measured at 1 m from the outdoor unit and at 1.5 m height. Performance in agreement with EN14511.

Internet Control Ready (INTERNET CONTROL) · 100% capacity at -15 °C (AQUAREA T-CAP) · High efficiency heating (INVERTER+) · Environmentally friendly refrigerant (R410A) · Down to -20°C in heating mode (OUTDOOR TEMPERATURE) · Boiler connection (RETROFIT) · Solar panels connection (SOLAR KIT) · Domestic hot water (DHW) · Easy control by BMS (CONNECTIVITY) · 5 year compressor warranty

INTERNET CONTROL READY: Optional.

AQUAREA HT

BI-BLOC SINGLE PHASE / THREE PHASE HEATING ONLY - SHF



Aquarea HT is able to deliver water heated to 65°C with the Heat Pump alone.

For a house with high temperature radiators (for example, cast iron radiators), the Aquarea High Temperature Solution is most suited as it provides output water temperatures of 65°C even at -20°C.

Technical focus

- **NEW!** New remote control functions
- Efficient control of room temperature based on the outdoor temperature, indoor temperature using the Aquarea Manager.
- Optional Smartphone control
- Range from 9 to 12kW, Single and Three Phase
- Maximum hydraulic module output temperature: 65°C
- Works down to -20°C
- Maximum 20 m rise between the outdoor unit and the hydraulic module



WH-UH09FE5 WH-UH09FE8
WH-UH12FE5 WH-UH12FE8

Optional Controllers



Aquarea Manager with LCD.
PAW-HPM1



Aquarea Manager touch screen.
PAW-HPMED for HPM



Wireless LCD room thermostat with weekly timer.
PAW-A2W-RTWIRELESS

			Single Phase (Power to indoor)		Three Phase (Power to indoor)	
Kit			**KIT-WHF09F3E5[1]**	**KIT-WHF12F6E5[1]**	**KIT-WHF09F3E8[2]**	**KIT-WHF12F9E8[2]**
Indoor unit			**WH-SHF09F3E5**	**WH-SHF12F6E5**	**WH-SHF09F3E8**	**WH-SHF12F9E8**
Outdoor unit			**WH-UH09FE5**	**WH-UH12FE5**	**WH-UH09FE8**	**WH-UH12FE8**
Heating capacity at +7°C (heating water at 35°C)		kW	9,00	12,00	9,00	12,00
COP at +7°C (heating water at 35°C)			4,64	4,46	4,64	4,46
Heating capacity at +2°C (heating water at 35°C)		kW	9,00	12,00	9,00	12,00
COP at +2°C (heating water at 35°C)			3,45	3,26	3,45	3,26
Heating capacity at -7°C (heating water at 35°C)		kW	9,00	12,00	9,00	12,00
COP at -7°C (heating water at 35°C)			2,74	2,52	2,74	2,52
Heating capacity at +7°C (heating water at 65°C)		kW	9,00	12,00	9,00	12,00
COP at +7°C (heating water at 65°C)			2,25	2,20	2,25	2,20
Heating capacity at +2°C (heating water at 65°C)		kW	9,00	10,30	9,00	10,30
COP at +2°C (heating water at 65°C)			1,88	1,83	1,88	1,83
Heating capacity at -7°C (heating water at 65°C)		kW	8,90	9,60	8,90	9,60
COP at -7°C (heating water at 65°C)			1,64	1,61	1,64	1,61
Indoor unit						
Dimensions / Weight	H x W x D	mm / kg	892 x 502 x 353 / 46	892 x 502 x 353 / 47	892 x 502 x 353 / 47	892 x 502 x 353 / 48
Water pipe connector			R 1 ¼	R 1 ¼	R 1 ¼	R 1 ¼
Pump	No. of Speed		7	7	7	7
	Input Power (Max.)	W	Min: 21 W at 10l/min / Max: 135 W at 53.8l/min			
Heating water flow (ΔT=5 K. 35°C)		l/min	25,8	34,4	25,8	34,4
Capacity of integrated electric heater		kW	3	6	3	9
Input Power		kW	1,94	2,69	1,94	2,69
Running and Starting current		A	9,3	12,9	3,0	4,2
Current 1 / Current 2		A	28,5 / 26,0	29,0 / 26,0	14,7 / 13,0	10,9 / 13,0
Recommended Fuse		A	30 / 30	30 / 30 / -	30 / 16	30 / 16 / -
Recommended power cable section		mm²	4,0 / 4,0	4,0 / 4,0 / -	4,0 / 2,5	4,0 / 2,5 / -
Outdoor unit						
Sound pressure level / Sound power level		dB(A) / dB	49 / 66	50 / 67	49 / 66	50 / 67
Dimensions / Weight	H x W x D	mm / kg	1.340 x 900 x 320 / 104	1.340 x 900 x 320 / 104	1.340 x 900 x 320 / 110	1.340 x 900 x 320 / 110
Pipe diameter	Liquid / Gas	mm (Inch)	9,52 (3/8) / 15,88 (5/8)	9,52 (3/8) / 15,88 (5/8)	9,52 (3/8) / 15,88 (5/8)	9,52 (3/8) / 15,88 (5/8)
Refrigerant (R407C)		kg	2,90	2,90	2,90	2,90
Pipe length range		m	3 – 30	3 – 30	3 – 30	3 – 30
Pipe length for nominal capacity		m	7	7	7	7
Pipe length for additional gas		m	10	10	10	10
Additional gas amount (R407C)		g/m	70	70	70	70
Elevation difference (in/out)		m	20	20	20	20
Operation range	Outdoor ambient	°C	-20 to 35	-20 to 35	-20 to 35	-20 to 35
Water outlet at -2/-7/-15		°C	25 – 65	25 – 65	25 – 65	25 – 65

Internet Control Ready (INTERNET CONTROL) · Output water 65°C (HIGH TEMP HEAT PUMP) · High efficiency heating (INVERTER+) · Environmentally friendly refrigerant (R407C) · Down to -20°C in heating mode (OUTDOOR TEMPERATURE) · Boiler connection (RETROFIT) · Solar panels connection (SOLAR KIT) · Domestic hot water (DHW) · Easy control by BMS (CONNECTIVITY) · 5 year compressor warranty

INTERNET CONTROL READY: Optional.

COP classification is at 230 V only in accordance with EU directive 2003/32/EC. Sound pressure measured at 1 m from the outdoor unit and at 1.5 m height. Performance in agreement with EN14511.
1) Available from March 2014. 2) Available from February 2014.

AQUAREA
HIGH PERFORMANCE
MONO-BLOC SINGLE PHASE
HEATING ONLY - MDF
HEATING AND COOLING - MDC



DESIGN FOR LOW CONSUMPTION HOMES

A class pump

Panasonic has designed the new Aquarea Mono-Bloc heat pump for houses which have high performance requirements but limited space to install the outdoor unit.
Whatever the weather, Aquarea can work even at -20°C. The Mono-Bloc is easy to install in new and existing residential properties.

Technical focus
- **NEW!** 5kW Model
- **NEW!** New remote control functions
- Efficient control of room temperature based on the outdoor temperature, indoor temperature using the Aquarea Manager.
- Optional Smartphone control
- Range from 6 to 9kW, Single Phase
- Maximum hydraulic module output temperature: 55°C
- Works down to -20°C
- Plug and play system



NEW REMOTE CONTROL
Only for the 5 kW Mono-Bloc

Optional Controllers


Aquarea Manager with LCD.
PAW-HPM1


Aquarea Manager touch screen.
PAW-HPMED for HPM


Wireless LCD room thermostat with weekly timer.
PAW-A2W-RTWIRELESS

			Single Phase Heating Only		Single Phase Heating and Cooling		
			WH-MDF06E3E5	WH-MDF09E3E5	WH-MDC05F3E5	WH-MDC06E3E5	WH-MDC09E3E5
Heating capacity at +7°C (heating water at 35°C)		kW	6,00	9,00	5,00	6,00	9,00
COP at +7°C (heating water at 35°C)			4,48	4,15	5,08	4,48	4,15
Heating capacity at +2°C (heating water at 35°C)		kW	5,00	7,45	4,80	5,00	7,45
COP at +2°C (heating water at 35°C)			3,45	3,14	3,75	3,45	3,14
Heating capacity at -7°C (heating water at 35°C)		kW	5,15	7,70	4,50	5,15	7,70
COP at -7°C (heating water at 35°C)			2,68	2,12	2,98	2,68	2,12
Cooling capacity at 35°C (cooling water at 7°C)[1]		kW	–	–	4,50	5,50	7,00
EER at 35°C (cooling water at 7°C)[1]			–	–	3,33	2,74	2,44
Sound pressure level		dB(A)	47	49	47	47	49
Sound power level		dB	65	67	65	65	67
Dimensions	H x W x D	mm	865 x 1283 x 320	865 x 1283 x 320	865 x 1.283 x 320	865 x 1.283 x 320	865 x 1.283 x 320
Weight		kg	112	112	107	112	112
Water pipe connector			R 1 ¼	R 1 ¼	R 1 ¼	R 1 ¼	R 1 ¼
Pump	No. of Speed		Variable Speed	Variable Speed	7	Variable Speed	Variable Speed
	Input power (Min/Max.)	W	Min: 21 W at 10l/min / Max: 135 W at 53.8l/min				
Water Flow (ΔT=5 K. 35°C)		l/min	17,2	25,8	9,2	17,2	25,8
Capacity of integrated electric heater		kW	3,00	3,00	3	3,00	3,00
Input Power at +7°C		kW	1,34	2,17	0,985	1,34	2,17
Running and Starting current at +7°C		A	6,1	9,9	3	6,1	9,9
Recommended Fuse		A	30 / 16	30 / 16	30 / 15	30 / 16	30 / 16
Recommended power cable section		mm²	4,0 / 2,5	4,0 / 2,5	4,0 / 2,5	4,0 / 2,5	4,0 / 2,5
Operation range	Outdoor ambient	°C	-20 to 35	-20 to 35	-20 to 35	-20 to 35	-20 to 35
Water outlet at -2/-7/-15		°C	20 – 55	20 – 55	20 – 55	20 – 55	20 – 55

COP classification is at 230 V only in accordance with EU directive 2003/32/EC.
Sound pressure measured at 1 m from the outdoor unit and at 1.5 m height.
Performance in agreement with EN14511.
1. Tentative. Authorized service partner or Authorized installer can enable the cooling mode through a special operation via the remote controller on site.
2. Tentative.

Internet Control Ready – INTERNET CONTROL
5,07 COP high efficiency – AQUAREA HIGH PERFORMANCE
High efficiency heating – INVERTER+
Environmentally friendly refrigerant – R410A
Down to -20°C in heating mode – OUTDOOR TEMPERATURE
Easy control by BMS – CONNECTIVITY
5 year compressor warranty

INTERNET CONTROL READY: Optional.

AQUAREA
HIGH PERFORMANCE
MONO-BLOC SINGLE PHASE / THREE PHASE
HEATING ONLY - MDF
HEATING AND COOLING - MDC



The Aquarea MDF / MDC range adapts well in an existing installation with a boiler backup, and in a new application with underfloor heating, low temperature radiators or even fan-coil heaters.
This range can also be connected to a solar kit in order to increase efficiency and minimize the impact on the ecosystem. Finally, it is possible to connect a thermostat for even better heating (MDF) or better heating and cooling control (MDC) control and management.

Technical focus
- Efficient control of room temperature based on the outdoor temperature, indoor temperature using the Aquarea Manager.
- Optional Smartphone control
- Range from 9 to 16kW, Single and Three Phase
- Maximum hydraulic module output temperature: 55°C
- Works down to -20°C
- Cooling temperature range 5–20 °C (MDC)

Optional Controllers


Aquarea Manager with LCD.
PAW-HPM1


Aquarea Manager touch screen.
PAW-HPMED for HPM


Wireless LCD room thermostat with weekly timer.
PAW-A2W-RTWIRELESS

			Single Phase			Three Phase			
Outdoor unit Heating Only			**WH-MDF12C6E5**	**WH-MDF14C6E5**	**WH-MDF16C6E5**	**WH-MDF09C3E8**	**WH-MDF12C9E8**	**WH-MDF14C9E8**	**WH-MDF16C9E8**
Outdoor unit Heating and Cooling			**WH-MDC12C6E5**	**WH-MDC14C6E5**	**WH-MDC16C6E5**	**WH-MDC09C3E8**	**WH-MDC12C9E8**	**WH-MDC14C9E8**	**WH-MDC16C9E8**
Heating capacity at +7°C (heating water at 35°C)		kW	12,00	14,00	16,00	9,00	12,00	14,00	16,00
COP at +7°C (heating water at 35°C)			4,67	4,50	4,23	4,74	4,67	4,50	4,23
Heating capacity at +2°C (heating water at 35°C)		kW	11,40	12,40	13,00	9,00	11,40	12,40	13,00
COP at +2°C (heating water at 35°C)			3,41	3,32	3,25	3,53	3,41	3,32	3,25
Heating capacity at -7°C (heating water at 35°C)		kW	10,00	10,70	11,40	9,00	10,00	10,70	11,40
COP at -7°C (heating water at 35°C)			2,70	2,68	2,65	2,81	2,70	2,68	2,65
Cooling capacity at 35°C (cooling water at 7°C)[1]		kW	10,00	11,50	12,20	7,00	10,00	11,50	12,20
EER at 35°C (cooling water at 7°C)[1]			2,78	2,61	2,54	3,11	2,78	2,61	2,54
Sound pressure level		dB(A)	50	51	53	49	50	51	53
Sound power level		dB	67	68	70	66	67	68	70
Dimensions	H x W x D	mm	1.410 x 1.283 x 320	1.410 x 1.283 x 320	1.410 x 1.283 x 320	1.410 x 1.283 x 320	1.410 x 1.283 x 320	1.410 x 1.283 x 320	1.410 x 1.283 x 320
Weight		kg	153	153	153	157	157	157	157
Water pipe connector			R 1 ¼	R 1 ¼	R 1 ¼	R 1 ¼	R 1 ¼	R 1 ¼	R 1 ¼
Pump	No. of Speed		3	3	3	3	3	3	3
	Input power (Max.)	W	190	190	190	190	190	190	190
Heating water flow (ΔT=5 K. 35°C)		l/min	34,4	40,1	45,9	25,8	34,4	40,1	45,9
Capacity of integrated electric heater		kW	6	6	6	3	9	9	9
Input Power	Heating	kW	2,57	3,11	3,78	1,90	2,57	3,11	3,78
	Cooling[1]	kW	3,60	4,40	4,80	2,25	3,60	4,40	4,80
Running and Starting current	Heating	A	11,6	14,1	17,1	2,9	3,9	4,7	5,7
	Cooling[1]	A	16,1	19,7	21,5	3,4	5,3	6,6	7,2
Current 1		A	24,0	25,0	26,0	11,8	8,8	9,4	9,9
Current 2		A	26,0	26,0	26,0	13,0	13,0	13,0	13,0
Current 3		A	13,0	13,0	13,0		13,0	13,0	13,0
Recommended Fuse		A	30 / 30 / 16	30 / 30 / 16	30 / 30 / 16	16 / 16	16 / 16 / 16	16 / 16 / 16	16 / 16 / 16
Recommended power cable section		mm^2	4,0 / 4,0 / 2,5	4,0 / 4,0 / 2,5	4,0 / 4,0 / 2,5	2,5 / 2,5	2,5 / 2,5 / 2,5	2,5 / 2,5 / 2,5	2,5 / 2,5 / 2,5
Operation range	Outdoor ambient	°C	-20 to 35	-20 to 35	-20 to 35	-20 to 35	-20 to 35	-20 to 35	-20 to 35
Water outlet at -2/-7/-15	Heating / Cooling[1]	°C	25 – 55 / 5 – 20	25 – 55 / 5 – 20	25 – 55 / 5 – 20	25 – 55 / 5 – 20	25 – 55 / 5 – 20	25 – 55 / 5 – 20	25 – 55 / 5 – 20

COP classification is at 230 V only in accordance with EU directive 2003/32/EC. Sound pressure measured at 1 m from the outdoor unit and at 1.5 m height. Performance in agreement with EN14511.
1. Specifications for Heating an Cooling models.

Internet Control Ready (optional) — INTERNET CONTROL
4,74 COP high efficiency — AQUAREA HIGH PERFORMANCE
High efficiency heating — INVERTER+
Environmentally friendly refrigerant — R410A
Down to -20°C in heating mode — OUTDOOR TEMPERATURE
Boiler connection — RETROFIT
Solar panels connection — SOLAR KIT
Domestic hot water — DHW
Easy control by BMS — CONNECTIVITY
5 year compressor warranty

INTERNET CONTROL READY: Optional.

AQUAREA T-CAP

MONO-BLOC SINGLE PHASE / THREE PHASE
HEATING ONLY - MXF
HEATING AND COOLING - MXC



The MXC is ideal for residential properties which don't have an external boiler and require a maintained capacity level.

T-CAP stands for Total Capacity. This new line-up is able to maintain the same nominal capacity even at -15°C without the help of an electrical booster heater. T-CAP is also able to provide extremely high efficiency, whatever the outside temperature or the water temperature. The MXC adapts well in an existing install with a boiler backup, and in a new application with underfloor heating, low temperature radiators or even fan-coil heaters. This range can also be connected to a solar kit in order to increase efficiency and minimize the impact on the ecosystem. Finally, it is possible to connect a thermostat for even better heating or cooling control and management.

Technical focus

- Efficient control of room temperature based on the outdoor temperature, indoor temperature using the Aquarea Manager.
- Optional Smartphone control
- Range from 9 to 12 kW, Single and Three Phase
- Maximum hydraulic module output temperature: 55 °C
- Works down to -20 °C
- Cooling temperature range 5–20 °C (MXC)

Optional Controllers



Aquarea Manager with LCD.
PAW-HPM1



Aquarea Manager touch screen.
PAW-HPMED for HPM



Wireless LCD room thermostat with weekly timer.
PAW-A2W-RTWIRELESS

			Single Phase		Three Phase	
Outdoor unit Heating Only			WH-MXF09D3E5	WH-MXF12D6E5	WH-MXF09D3E8	WH-MXF12D9E8
Outdoor unit Heating and Cooling			WH-MXC09D3E5	WH-MXC12D6E5	WH-MXC09D3E8	WH-MXC12D9E8
Heating capacity at +7°C (heating water at 35°C)		kW	9,00	12,00	9,00	12,00
COP at +7°C (heating water at 35°C)			4,74	4,67	4,74	4,67
Heating capacity at +2°C (heating water at 35°C)		kW	9,00	12,00	9,00	12,00
COP at +2°C (heating water at 35°C)			3,53	3,40	3,53	3,40
Heating capacity at -7°C (heating water at 35°C)		kW	9,00	12,00	9,00	12,00
COP at -7°C (heating water at 35°C)			2,81	2,70	2,81	2,70
Cooling capacity at 35°C (cooling water at 7°C)		kW	7,00	10,00	7,00	10,00
EER at 35°C (cooling water at 7°C)			3,11	2,78	3,11	2,78
Sound pressure level		dB(A)	49	50	49	50
Sound power level		dB	66	67	66	67
Dimensions	H x W x D	mm	14.10 x 1.283 x 320	1.410 x 1.283 x 320	1.410 x 1.283 x 320	1.410 x 1.283 x 320
Weight		kg	155	155	158	158
Water pipe connector			R 1 ¼	R 1 ¼	R 1 ¼	R 1 ¼
Pump	No. of Speed		3	3	3	3
	Input power (Max.)	W	190	190	190	190
Heating water flow (ΔT=5 K. 35°C)		l/min	25,8	34,4	25,8	34,4
Capacity of integrated electric heater		kW	3	6	3	9
Input Power		kW	1,90	2,57	1,90	2,57
Starting Current		A	10,4	16,7	2,9	3,9
Current 1		A	25,0	29,0	14,7	11,9
Current 2		A	26,0	26,0	13,0	13,0
Current 3		A		13,0		13,0
Recommended Fuse		A	30 / 30	30 / 30 / 16	16 / 16	16 / 16 / 16
Recommended power cable section		mm^2	4,0 / 4,0	4,0 / 4,0 / 2,5	2,5 / 2,5	2,5 / 2,5 / 2,5
Operation range	Outdoor ambient	°C	-20 to 35	-20 to 35	-20 to 35	-20 to 35
Water outlet at -2/-7/-15	Heating / Cooling[1]	°C	25 – 55 / 5 – 20	25 – 55 / 5 – 20	25 – 55 / 5 – 20	25 – 55 / 5 – 20

COP classification is at 230 V only in accordance with EU directive 2003/32/EC. Sound pressure measured at 1 m from the outdoor unit and at 1.5 m height. Performance in agreement with EN14511.
1. Specifications for Heating an Cooling models.

Internet Control Ready (INTERNET CONTROL) · 100% capacity at -15 °C (AQUAREA T-CAP) · High efficiency heating (INVERTER+) · Environmentally friendly refrigerant (R410A) · Down to -20°C in heating mode (OUTDOOR TEMPERATURE) · Boiler connection (RETROFIT) · Solar panels connection (SOLAR KIT) · Domestic hot water (DHW) · Easy control by BMS (CONNECTIVITY) · 5 year compressor warranty

INTERNET CONTROL READY: Optional.

AQUAREA HT

MONO-BLOC SINGLE PHASE / THREE PHASE
HEATING ONLY - MHF



Aquarea HT is able to deliver 65°C with the Heat Pump alone.
For a house with high temperature radiators (for example, cast iron radiators), the Aquarea High Temperature Solution is most suited as it provides output water temperatures of 65°C even at -20°C.

Technical focus
- Efficient control of room temperature based on the outdoor temperature, indoor temperature using the Aquarea Manager.
- Optional Smartphone control
- Range from 9 to 12kW, Single and Three Phase
- Maximum hydraulic module output temperature: 65°C
- Works down to -20°C

Optional Controllers


Aquarea Manager with LCD.
PAW-HPM1


Aquarea Manager touch screen.
PAW-HPMED for HPM


Wireless LCD room thermostat with weekly timer.
PAW-A2W-RTWIRELESS

			Single Phase		Three Phase	
			WH-MHF09D3E5	WH-MHF12D6E5	WH-MHF09D3E8	WH-MHF12D9E8
Heating capacity at +7°C (heating water at 35°C)		kW	9,00	12,00	9,00	12,00
COP at +7°C (heating water at 35°C)			4,55	4,40	4,55	4,40
Heating capacity at +2°C (heating water at 35°C)		kW	9,00	12,00	9,00	12,00
COP at +2°C (heating water at 35°C)			3,40	3,23	3,40	3,23
Heating capacity at -7°C (heating water at 35°C)		kW	9,00	12,00	9,00	12,00
COP at -7°C (heating water at 35°C)			2,70	2,50	2,70	2,50
Heating capacity at +7°C (heating water at 65°C)		kW	9,00	12,00	9,00	12,00
COP at +7°C (heating water at 65°C)			2,25	2,20	2,25	2,20
Heating capacity at +2°C (heating water at 65°C)		kW	9,00	10,30	9,00	10,30
COP at +2°C (heating water at 65°C)			1,88	1,83	1,88	1,83
Heating capacity at -7°C (heating water at 65°C)		kW	8,90	9,60	8,90	9,60
COP at -7°C (heating water at 65°C)			1,62	1,61	1,62	1,61
Sound pressure level		dB(A)	49	50	49	50
Sound power level		dB	66	67	66	67
Dimensions	H x W x D	mm	1.410 x 1.283 x 320	1.410 x 1.283 x 320	1.410 x 1.283 x 320	1.410 x 1.283 x 320
Weight		kg	155	155	158	158
Water pipe connector			R 1 ¼	R 1 ¼	R 1 ¼	R 1 ¼
Pump	No. of Speed		3	3	3	3
	Input Power (Max.)	W	190	190	190	190
Heating water flow (ΔT=5 K. 35°C)		l/min	25,8	34,4	25,8	34,4
Capacity of integrated electric heater		kW	3	6	3	9
Input Power		kW	1,98	2,73	1,98	2,73
Running and Starting current		A	9,5	12,8	9,5	12,8
Current 1		A	28,5	29,0	14,7	11,9
Current 2		A	26,0	26,0	13,0	13,0
Current 3		A		13,0		13,0
Recommended Fuse		A	30 / 30	30 / 30 / 16	-16 / 16	16 / 16 / 16
Recommended power cable section		mm^2	4,0 / 4,0	4,0 / 4,0 / 2,5	2,5 / 2,5	2,5 / 2,5 / 2,5
Operation range	Outdoor ambient	°C	-20 to 35	-20 to 35	-20 to 35	-20 to 35
Water outlet at -2/-7/-15		°C	25 – 65	25 – 65	25 – 65	25 – 65

COP classification is at 230 V only in accordance with EU directive 2003/32/EC. Sound pressure measured at 1 m from the outdoor unit and at 1.5 m height. Performance in agreement with EN14511.

Internet Control Ready (optional) — INTERNET CONTROL
Output water 65°C — HIGH TEMP HEAT PUMP
High efficiency heating — INVERTER+
Environmentally friendly refrigerant — R407C
Down to -20°C in heating mode — OUTDOOR TEMPERATURE
Boiler connection — RETROFIT
Solar panels connection — SOLAR KIT
Domestic hot water — DHW
Easy control by BMS — CONNECTIVITY
5 year compressor warranty

INTERNET CONTROL READY: Optional.

AQUAREA AIR RADIATORS

The slimline Panasonic Aquarea Air radiators deliver high efficiency climate control. With a depth of just under 13 cm they are at the cutting edge of the market. Blending easily into the home, Aquarea Air's elegant design and product refinements are clear to see in every detail.

The Aquarea Air's slimline profile has been achieved thanks to the innovative layout of the ventilation unit and the heat exchanger. The fan is tangential with asymmetric blades and the large surface heat exchanger enables high airflows to be achieved with low pressure loss and low noise levels. Exceptional ventilation efficiency means the motor uses considerably less energy (low wattage). The fan speed is continuously modulated by the temperature controller with proportional integral logic, with undoubted advantages for regulating the temperature and humidity in summer mode.

All temperature curves and capacity are available on www.panasonicproclub.com



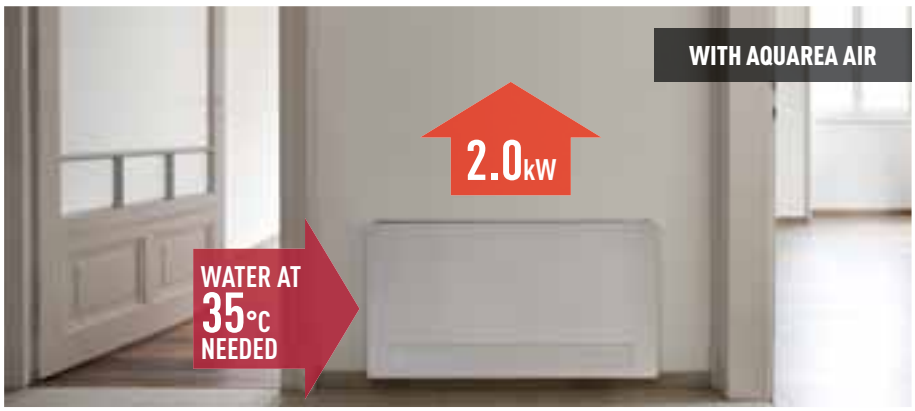



Fan Coils for Heat Pump application		PAW-AAIR-200					PAW-AAIR-700					PAW-AAIR-900				
Without radiant heating		PAW-AAIR-200L					PAW-AAIR-700L					PAW-AAIR-900L				
Total heating capacity	W	138	160	217	470	570	223	360	708	1.032	1.188	273	475	886	1.420	1.703
Water flow	kg/h	23,7	27,5	37,3	80,8	98,0	38,4	61,9	121,8	177,5	204,3	47,0	81,7	152,4	244,2	292,9
Water pressure drop	kPa	0,1	0,2	0,4	2,0	2,9	0,1	0,1	0,3	0,8	1,0	0,1	0,2	0,5	1,6	2,2
Air flow	m³/h	28	37	55	113	162	44	84	155	252	320	54	110	248	367	461
	Speed	Main Fan Off	Super Min	Min	Med	Max	Main Fan Off	Super Min	Min	Med	Max	Main Fan Off	Super Min	Min	Med	Max
Maximum input power	W	2	5	7	9	13	3	9	14	18	22	3	11	16	20	24
Sound pressure level	dB(A)	17,6	18,8	24,7	33,2	39,4	18,4	19,6	25,8	34,1	40,2	18,4	22,3	26,2	34,4	42,2
Inlet water temperature	°C	35	35	35	35	35	35	35	35	35	35	35	35	35	35	35
Outlet water temperature	°C	30	30	30	30	30	30	30	30	30	30	30	30	30	30	30
Inlet air temperature	°C	19	19	19	19	19	19	19	19	19	19	19	19	19	19	19
Outlet air temperature	°C	34,5	32,6	38,9	32,0	30,0	34,9	32,4	33,3	31,8	30,6	34,8	32,5	30,2	31,1	30,6
Dimensions (H x W x D)	mm	735 x 576 x 129					935 x 579 x 129					1.135 x 579 x 129				
Weight	kg	17					20					23				
3 ways valve included		Yes					Yes					Yes				
Touch screen thermostat		Yes					Yes					Yes				

During winter, the operating principle is based on micro fans of very low power consumption and minimum noise that send hot air, coming from the heat exchanger, to the inside of the front panel of the device and therefore heat it effectively. With this principle, the terminal also provides significant power while heating, without running the main fan. Comfort temperatures are therefore maintained, without air movements and in silence. In summer mode, the airflow generated by the micro fans is stopped to avoid any dew formation on the terminal's front surface.

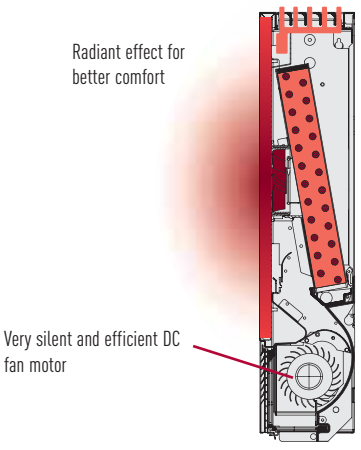

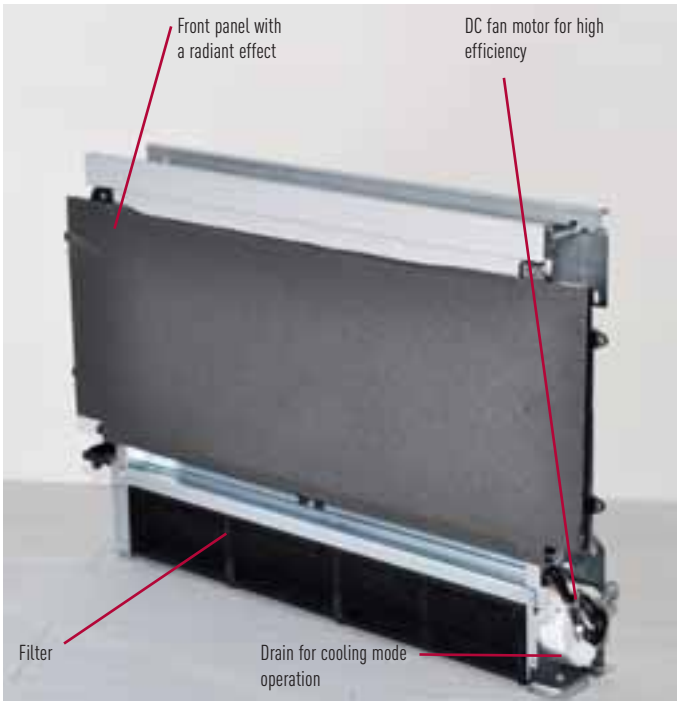

32%
MORE EFFICIENT THAN STANDARD RADIATORS



PAW-AAIR-900

AQUAREA
AIR



PAW-AAIR-700 PAW-AAIR-200

New line up of Super low temperature radiators for Heat Pump application:

Aquarea Air 200/700/900 with radiating effect

Major Benefit

- On the water installation
  - Only 1 water temperature on the water circuit (35°C)
  - No expansive 2 zone kits
  - No overflow valve (as Aquarea Air has a 3-way valve)
  - Very easy to install
- On the efficiency
  - COP with water at 35°C is 32% higher than efficiency with water at 45°C! (case MDF06, at +7°C)

Main features

- Front panel heating with radiant effect
- High heating capacity (without main fan running)
- 4 fan speeds and capacities
- Exclusive design
- Extremely compact (only 12.9 cm deep)
- Cooling and dehumidification functions possible (drain is needed)
- 3-way valve included (no overflow valve needed on the installation if more than 3 radiators installed)
- Touch screen thermostat

Accessories for Aquarea Air	
PAW-AAIR-LEGS-1*	Kits of 2 legs to support the Aquarea Air on the floor and to protect the water pipings

* Available from March 2014





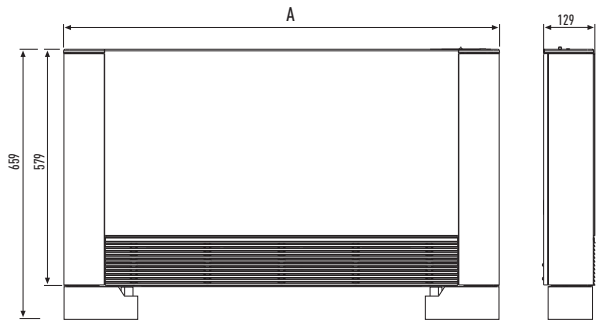

	200	700	900
A	735	935	1.135

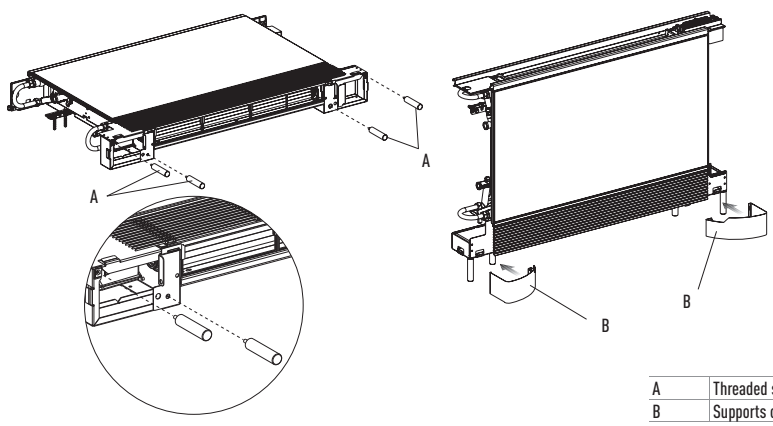

A	Threaded supports
B	Supports cover

Operating on heating mode with radiator using only radiant effect

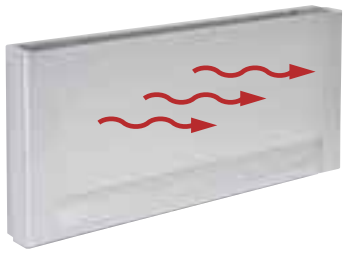

Operating on heating mode with radiant effect and fan mode

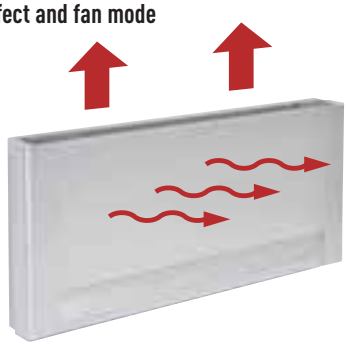

Operating on cooling mode with fan



Accessories

Tanks		Stainless Steel Tank		Enamelled Tank		Enamelled high efficiency Tank			Enamelled 2 coils Tank (for bivalent Solar + HP)
Model		WH-TD20E3E5	WH-TD30E3E5-1*	PAW-TE20E3STD*	PAW-TE30E3STD*	PAW-TE20E3HI*	PAW-TE30E3HI*	PAW-TE50E3HI*	PAW-TE30C2E3STD*
									
Water volume	L	200	300	190	290	200	288	440	287
Maximum water temperature	°C	75	75	95	95	95	95	95	95
Dimensions Hight / Diameter	mm	1.150 / 580	1.600 / 580	1.432 / 540	1.794 / 600	1.804 / 600	1.294 / 700	1.921 / 700	1.294 / 700
Weight	kg	49	65	65	85	78	139	222	145
Electric heater	kW	3	3	3	3	3	3	3	3
Power supply	V	230	230	230	230	230	230	230	230
Material inside tank		Stainless steel	Stainless steel	Enamelled	Enamelled	Enamelled	Enamelled	Enamelled	
Exchange surface	m²	1,4	1,8	1,90	2,55	2,25	3,20	6,20	2,4 (for HP) +1,1 (for solar or boiler)
Energy loss at 65°C[1]	kWh/24h	1,9	2,3	1,6	1,8	1,2	1,8	2,4	2,7
3 Way valve included		Yes	Yes	Yes	Yes	Yes	Yes	Yes	Yes
20 m temperature sensor cable included		Yes	Yes	Yes	Yes	Yes	Yes	Yes	Yes
Heat up time	Valuation	★★☆☆	★★☆☆	★★★☆	★★★☆	★★★★	★★★★	★★★☆	★★★☆
Energy losses	Valuation	★★★☆	★★★☆	★★★☆	★★★☆	★★★★	★★★★	★★★☆	★★★☆
Efficiency of the tank	Valuation	★★☆☆	★★☆☆	★★☆☆	★★☆☆	★★★★	★★★★	★★★☆	★★☆☆
Warranty		10 years	10 years	7 years	7 years	7 years	7 years	7 years	7 years
Maintenance required		No	No	Yearly	Yearly	Yearly	Yearly	Yearly	Yearly

1) Insulated tested under EN12897.
* Available from March 2014.



High efficiency water tanks with a large exchange surface and high levels of insulation to minimise energy losses.

AQUAREA TANK



Aquarea Tank. Tanks and buffer tank in one!

Tanks and buffer tank in one!			Standard Sanitary
Model			PAW-TD20B8E3-NDS
Water volume		L	185 (for DHW tank) / 80 (for buffer tank)
Maximum water temperature		°C	100
Dimension	H x W x D	mm	1.810 x 600 x 632
Weight		kg	150
Electric heater		kW	3
Power supply		V	230 - 2p
Material inside tank			Stainless steel
Exchange surface		m²	2,3
Energy loss at 65°C[1]		kWh/24h	1,3
A class pump	Number of speed		Stepless (800-4250 rpm)
	Pressure drop (Min / Max)	kPa	5 / 6
	Input power (Min / Max)	W	3 / 45
3 Way valve included			Yes
Safety thermostat with contact for failure part of E-Heating			Yes
Location of the electrical heater			Mid
Electrical backup heater on the buffer tank			Optional





CZ-NS1P // CZ-NS3P // CZ-NS2P



CZ-TK1



PAW-TS1 / PAW-TS2



CZ-NE1P

Solar Kit Accessories	
CZ-NS1P	PCB for solar connection kit for split systems
CZ-NS2P	PCB for solar connection kit for Mono-Bloc systems
CZ-NS3P	PCB for solar connection kit for Mono-Bloc systems 6 & 9 kW

Sanitary Tank Accessories	
CZ-TK1	Temperature sensor kit for third party tank (with copper pocket and 6 m length sensor cable)
PAW-TS1	Tank sensor with 6 meter cable length
PAW-TS2	Tank sensor with 6 meter cable length

Deice Accessories	
CZ-NE1P	Base pan heater (for all old Bi-bloc and Mono-bloc, not for the 3 and 5 kW)
CZ-NE2P	Base pan heater (for 3 kW and 5 kW)
CZ-NE3P	Base pan heater (for all new F generation products: F3, F6, F9)

Connectivity Solutions	
Model name	Interface
PAW-AW-KNX-1i	KNX Interface
PAW-ZIG-A2W	Interface to connect to Zig Bee
PAW-AW-MBS-1	Modbus Interface
PAW-AW-WIFI-1	Interface for IntesisHome for Aquarea Models
PAW-AW-WIFI-1TE	Wired room temperature sensor (only for PAW-AW-WIFI-1A)



PAW-HPM1



PAW-HPM2

Aquarea Manager Kits	
PAW-HPM12ZONE-U	HPM with roomsensor and setpoint adaption for Bi-bloc + sensors
PAW-HPM12ZONE-M	HPM with roomsensor and setpoint adaption for Mono-bloc + sensors
PAW-HPM12ZONELCD-U	HPM with LCD Wireless Room Thermostat for Bi-bloc + sensors
PAW-HPM12ZONELCD-M	HPM with LCD Wireless Room Thermostat for Mono-bloc + sensors
PAW-HPM12ZONE-F	HPM with roomsensor and setpoint adaption for Mono-bloc + Bi-bloc F type + sensor
PAW-HPM12ZONELCD-F	HPM with LCD Wireless Room Thermostat for Mono-bloc + Bi-bloc F type + sensor



PAW-HPMED

Aquarea Manager Accessories	
PAW-HPM1	Aquarea Manager with LCD
PAW-HPM2	Aquarea Manager without LCD
PAW-HPMINT-U	Interface to connect Aquarea Manager to Heat pump Aquarea Bi-bloc (HPM can control all parametres from HP)
PAW-HPMINT-M	Interface to connect Aquarea Manager to Heat pump Aquarea Mono-bloc (HPM can control all parametres from HP)
PAW-HPMINT-F	Interface to connect Aquarea Manager to Heat pump Aquarea Mono-bloc and Bi-bloc F type (HPM can control all parametres from HP)
PAW-HPMB1	Buffer tank sensor
PAW-HPMDHW	Buffer tank sensor with well
PAW-HPMSOL1	Buffer tank sensor solar (with higher temperature range)
PAW-HPMAH1	Water flow pipe sensor for heating circuit
PAW-HPMR4	Room sensor + set point adaption
PAW-HPMED	Touch screen
PAW-HPMLCD*	Room thermostast with LCD
PAW-LANCABLE	Network cable
PAW-A2WSWITCH	Network switch
PAW-HPM-CASE	HPM casing with Premounted cables **NEW!**
PAW-DEWPOINTSENSOR	Dew point sensor
PAW-HPMUH	Outdoor temperature sensor

Hydraulic Accessories	
PAW-2PMP2ZONE	2 zone kit, hydraulic switch, manifold, 2 A-class pumps, 1 mixture valve and check valve + filter
PAW-FILTER	2 check valves + filter with 1"
PAW-FILTER-ONLY	Filter with 1"

* Not fixed yet



PAW-A2W-RTWIRED



PAW-A2W-RTWIRELESS

Room Thermostats	
PAW-A2W-RTWIRED	Wired LCD room thermostat with weekly timer
PAW-A2W-RTWIRELESS	Wireless LCD room thermostat with weekly timer

Accessories For All In One 2014	
PAW-FP-WMP-1	Flexible pipings and wall mounting plate for all in one (Available from October 2014)

Examples of installations with Aquarea Manager

Temperature control in the 2 zones with PAW-HPM12ZONE-U

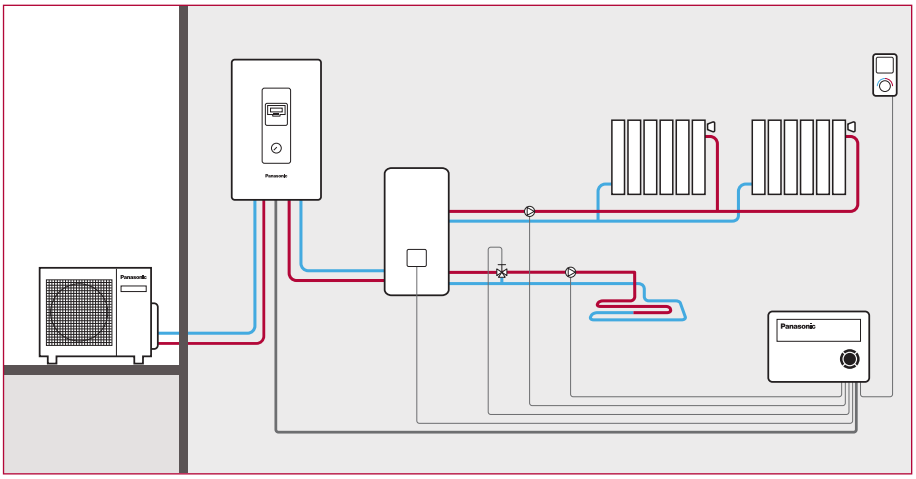

2 heat pumps in cascade with the PAW-HPM12ZONELCD-U

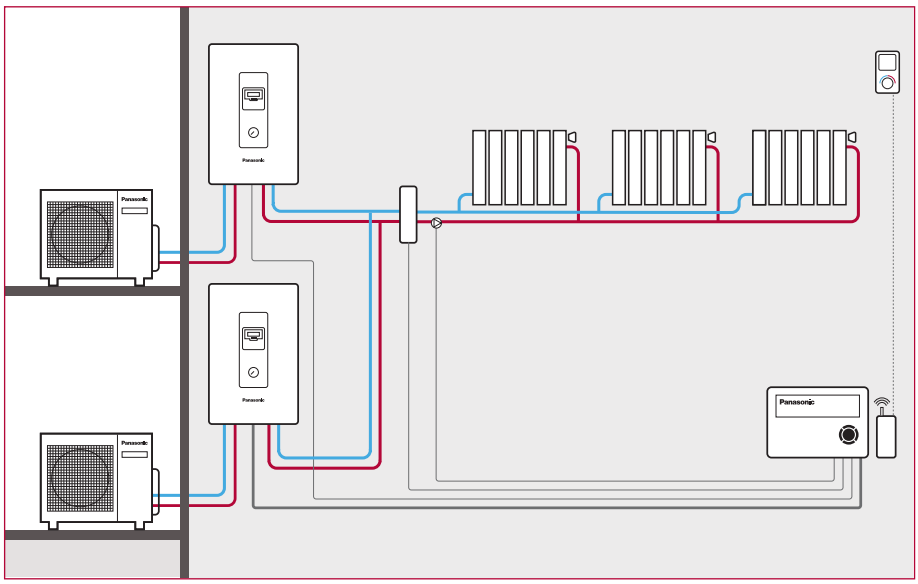

2 heat pump + boiler with PAW-HPM12ZONE-U

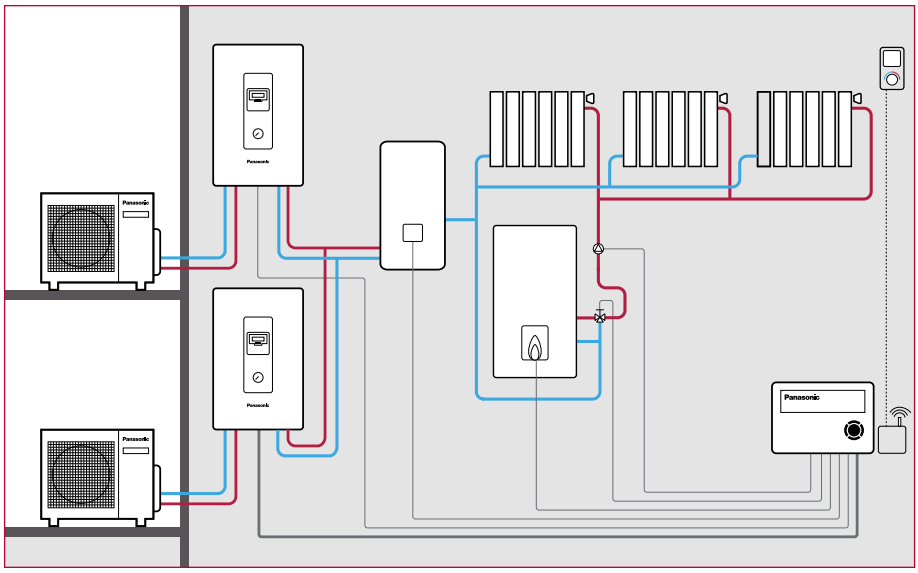

Temperature control in zones 2 + ECS with PAW-HPM12ZONE-U

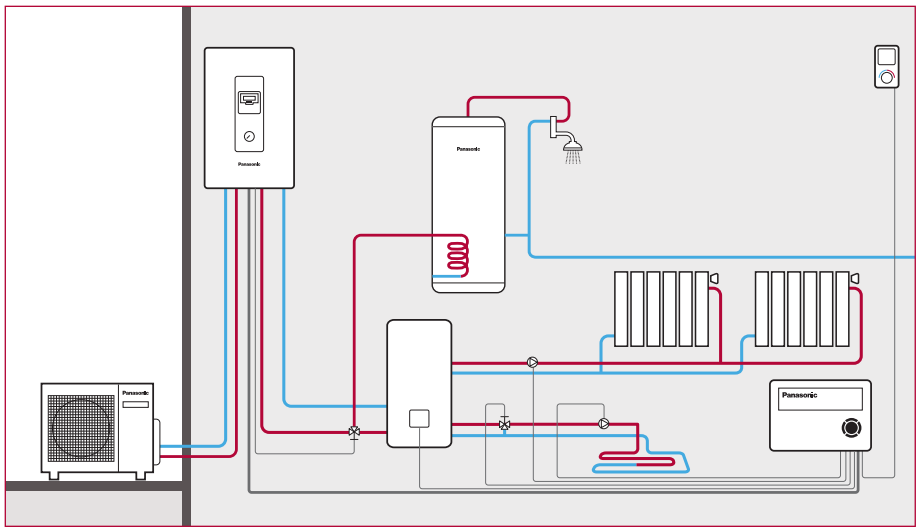

Management of heat pump + boiler and DHW with PAW-HPM12ZONELCD-U

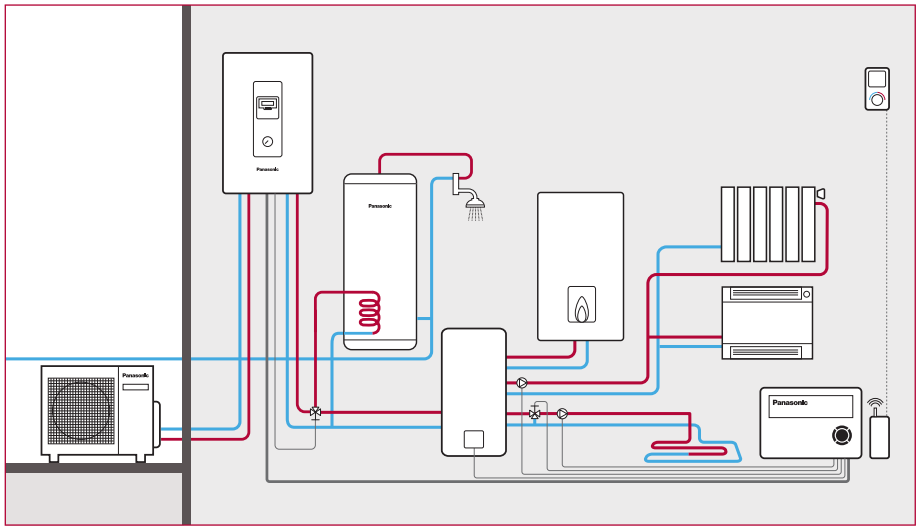

3 heat pumps in cascade with PAW-HPM12ZONELCD-U

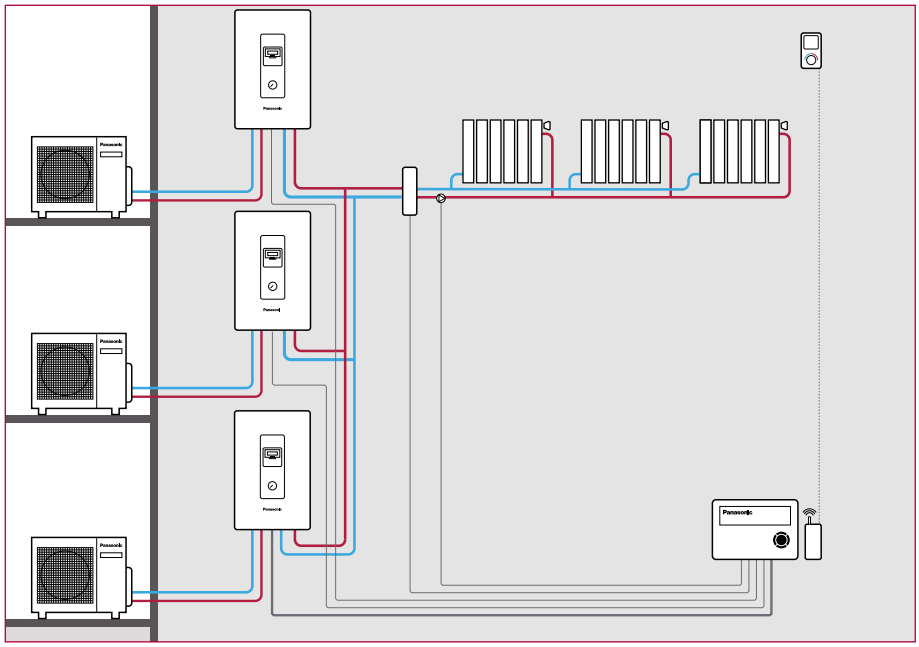



A typical example of savings and efficiencies that Aquarea can offer to you

A 125m² house in Reims

The example below shows a typical 3 bedroom French home and highlights the potential savings that can be achieved with Panasonic's Aquarea heat pump.*

Building data	
Address	Reims (French)
Building area	125 m²
Standard heating requirement	11,3 kW
Internal gains	5625 kWh/year
Solar gains (windows)	4500 kWh/year
Indoor design temperature	20°C
Outdoor temp. limit for heating 'on'	15°C
Heat distribution	Underfloor heating by 100 %
	Radiator heating by -- %
	Wall heating by -- %
Max. flow water temperature	55°C
Max. return water temperature	50°C
Solar collector area	-- m²

Service hot water	
Type of service	Hot water with heat pump
Tank volume	300 Litre
Average daily need	200 Litre
Cold water inlet temperature	10°C
Target tank temperature	50°C
Exchange loss	5 K
Electrical auxiliary heating necessary	no

Used Panasonic heat pump	
Description	WH-SXF12D6E5
Sanitary tank	WH-TD30E3E5
Heat pump type	air / water
Wattage at 2/35	heat: 11,7 kW, electric: 3,4 kW
Recommended flow-through of air	4800,0 m³/h
Max. flow temperature	55°C
Mode of operation	monovalent
Design/Bivalent temperature	-5,0°C
Number of heat pumps used	1
Wattage of fan (included in heat pump performance data: yes)	60 W
Wattage of heat circulation pump(s)	180 W

Rate data		
Description	French (Panasonic)	
Shut off times total	0.0 h/day	
Weekends with shut off times	yes	
Daytime rate of heat pump	Time for daytime rate	
	5 - 19 o'clock	14,0 pence/kWh
Nighttime rate of heat pump	Time for nighttime rate	
	19 - 5 o'clock	14,0 pence/kWh
Heat circulation pump(s)	like heat pump: yes	-- pence/kWh
Heating element for monoenergetic operation	Like heat pump: yes	-- pence/kWh
Heating element for post heating of hot water	like heat pump: yes	-- pence/kWh

Climatic data				
Climatic location	Reims (FR)			
Monthly average temperatures in°C	Jan	3,4	Jul	16,0
	Feb	3,6	Aug	15,9
	Mar	5,7	Sep	13,7
	Apr	8,0	Oct	10,4
	May	11,2	Nov	6,7
	Jun	14,1	Dec	4,6

* Calculations were carried using Panasonic's Aquarea Designer software, available from the PRO Club website (www.panasonicproclub.com).

Calculation results

Monthly heat consumption in kWh

Annual energy costs	
Caused by heat producers	
Heat pump	1.600 €
Hot water heating rod	0 €
Caused by heat consumers	
Space heating	1.220 €
Service hot water	225 €
Heat circulation pump(s)	155 €
Total	**1.600 €**

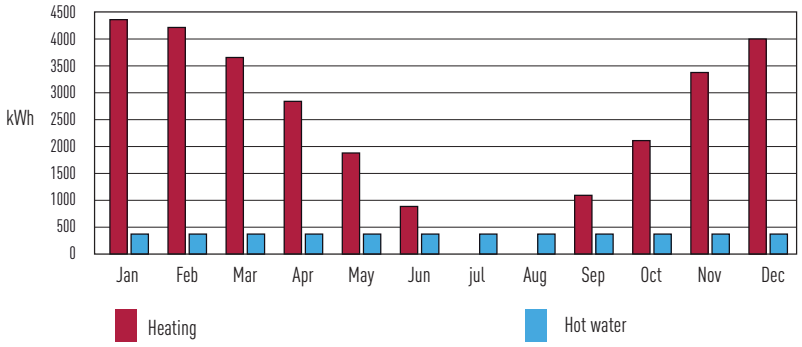

Aquarea energy coverage

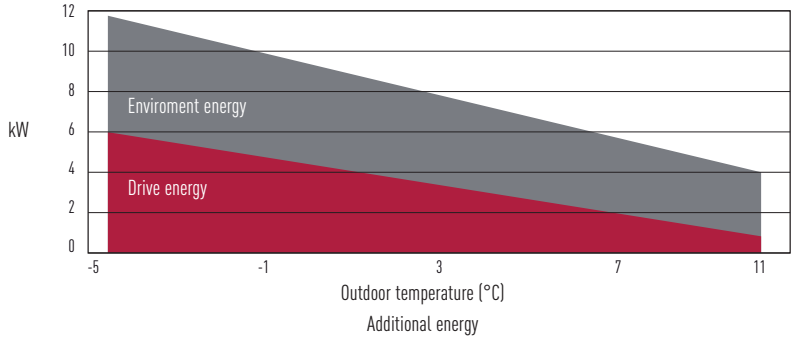

Comparison of running costs

Operational costs				
Type of heating	Price in pence/kWh	Efficiency [%]	Additional costs in €/year	Total costs in €/year
Heat pump	-	-	0	1.600
Oil	6,5	85	0	3.050
Gas	4,0	90	0	1.868
Wood heating	5,0	80	0	2.539
Electric night storage heater	12,0	100	0	4.455
Electric heating element	14,0	100	0	5.197

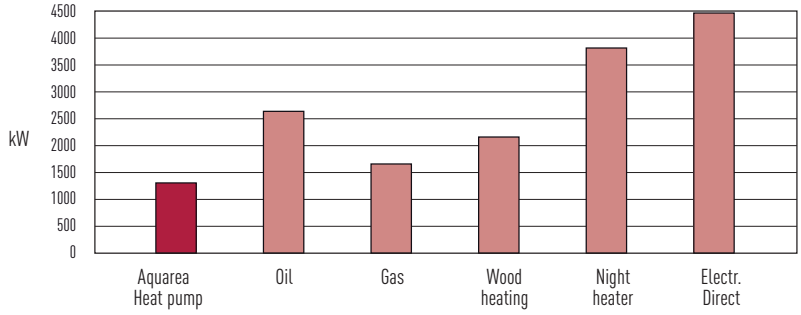

Comparison of CO_2 emissions

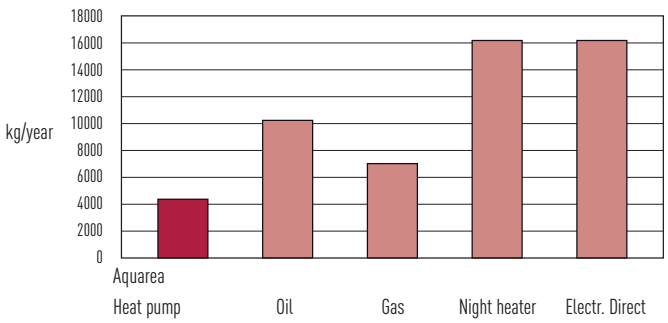

Comparison of CO_2 savings

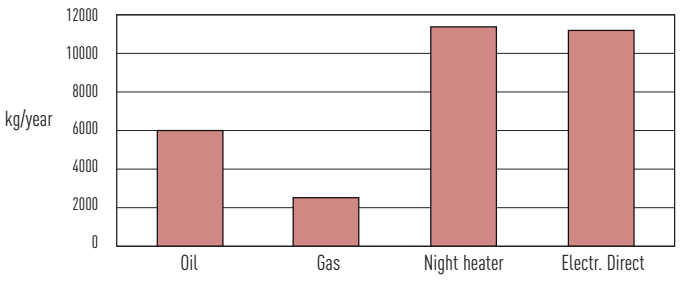

Heating capacity table based on outlet temperature and outside temperature

Heating capacity Curve

Aquarea. High Performance. Bi-Bloc Single Phase. Heating Only - SDF. Heating and Cooling - SDC. 3 and 5kW																		
WH-SDF03E3E5 / WH-SDC03E3E5																		
Tamb	**HC**	**IP**	**COP**	**HC**	**IP**	**COP**	**HC**	**IP**	**COP**	**HC**	**IP**	**COP**	**HC**	**IP**	**COP**	**HC**	**IP**	**COP**
LWC	**30**	**30**	**30**	**35**	**35**	**35**	**40**	**40**	**40**	**45**	**45**	**45**	**50**	**50**	**50**	**55**	**55**	**55**
-15	3,20	1,39	2,30	3,20	1,39	2,30	3,00	1,64	1,83	3,00	1,64	1,83	2,75	1,92	1,43	2,75	1,92	1,43
-7	3,20	1,19	2,69	3,20	1,19	2,69	3,20	1,48	2,16	3,20	1,48	2,16	3,20	1,86	1,72	3,20	1,86	1,72
2	3,20	0,90	3,56	3,20	0,90	3,56	3,20	1,16	2,76	3,20	1,16	2,76	3,20	1,49	2,15	3,20	1,49	2,15
7	3,20	0,64	5,00	3,20	0,64	5,00	3,20	0,89	3,60	3,20	0,89	3,60	3,20	1,20	2,67	3,20	1,20	2,67

WH-SDF05E3E5 / WH-SDC05E3E5																		
Tamb	**HC**	**IP**	**COP**	**HC**	**IP**	**COP**	**HC**	**IP**	**COP**	**HC**	**IP**	**COP**	**HC**	**IP**	**COP**	**HC**	**IP**	**COP**
LWC	**30**	**30**	**30**	**35**	**35**	**35**	**40**	**40**	**40**	**45**	**45**	**45**	**50**	**50**	**50**	**55**	**55**	**55**
-15	4,20	1,94	2,16	4,20	1,94	2,16	3,4	1,98	1,72	3,40	1,98	1,72	3,00	2,12	1,42	3,00	2,12	1,42
-7	4,20	1,62	2,59	4,20	1,62	2,59	3,8	1,82	2,09	3,80	1,82	2,09	3,55	2,08	1,71	3,55	2,08	1,71
2	4,20	1,35	3,11	4,20	1,35	3,11	4,2	1,65	2,55	4,20	1,65	2,55	4,10	2,07	1,98	4,10	2,07	1,98
7	5,00	1,08	4,63	5,00	1,08	4,63	5,00	1,48	3,38	5,00	1,48	3,38	5,00	1,89	2,65	5,00	1,89	2,65

Cooling Capacity Curve

Aquarea. High Performance. Bi-Bloc Single Phase. Heating and Cooling - SDC. 3 and 5kW												
MODELS	**WH-SDC03E3E5**						**WH-SDC05E3E5**					
Tamb	**CC**	**IP**	**CC**	**IP**	**CC**	**IP**	**CC**	**IP**	**CC**	**IP**	**CC**	**IP**
LWC	**7**	**7**	**14**	**14**	**18**	**18**	**7**	**7**	**14**	**14**	**18**	**18**
18	2,40	0,42	4,40	0,73	3,70	0,49	4,50	0,89	5,00	0,90	5,70	0,90
25	3,20	0,73	4,10	0,86	3,50	0,59	5,00	1,43	6,30	1,50	5,40	1,06
35	3,20	1,04	3,90	1,07	3,30	0,74	4,50	1,67	5,50	1,68	5,00	1,33
43	2,90	1,20	3,50	1,20	3,00	0,88	3,30	1,53	4,10	1,52	4,40	1,53

Tamb: Ambient Temperature (°C). LWC: Leaving Water Condenser Temperature (°C). HC: Heating capacity (kW). CC: Cooling Capacity (kW). IP: Power Input (kW)
This data is measured by Panasonic in accordance with EN14511-2 standard. This data is for reference purpose only, and does not guarantee the performance.

Hydraulic Pump Performance. Constant Pressure Head Difference (Δp-c). 3 and 5kW

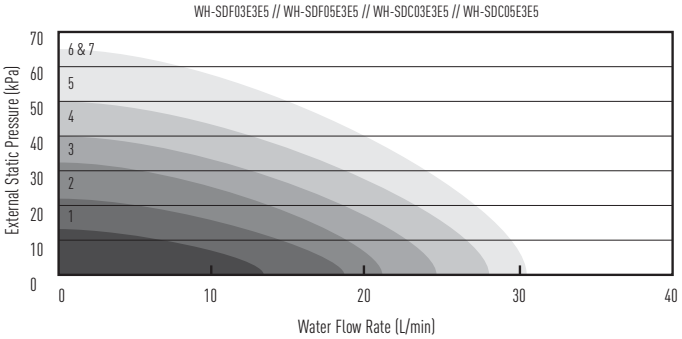

A Δp-c
When pressure loss of system increased, pump speed will be reduced for maintain constant pressure.

Hydraulic Pump Performance. Variable Pressure Head Difference (Δp-v). 3 and 5kW

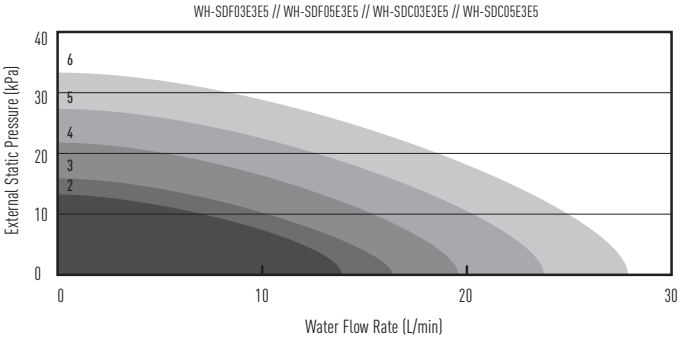

A Δp-v
When pressure loss of system increased, pump speed will be reduced for maintain pressure according to water flow rate.

Heating capacity Curve

Aquarea. High Performance. Mono-Bloc Single Phase. Heating Only - MDF. Heating and Cooling - MDC. 5, 6 and 9kW																		
WH-MDC05F3E5																		
Tamb	**HC**	**IP**	**COP**	**HC**	**IP**	**COP**	**HC**	**IP**	**COP**	**HC**	**IP**	**COP**	**HC**	**IP**	**COP**	**HC**	**IP**	**COP**
LWC	**30**	**30**	**30**	**35**	**35**	**35**	**40**	**40**	**40**	**45**	**45**	**45**	**50**	**50**	**50**	**55**	**55**	**55**
-15	5,00	1,82	2,75	5,00	1,95	2,56	5,00	2,20	2,27	5,00	2,45	2,04	5,00	2,70	1,85	5,00	2,95	1,69
-7	4,50	1,44	3,13	4,50	1,51	2,98	4,50	1,64	2,74	4,50	1,78	2,53	4,50	1,94	2,32	4,30	2,12	2,03
2	4,80	1,22	3,93	4,80	1,28	3,75	4,80	1,40	3,43	4,50	1,52	2,96	4,30	1,57	2,14	4,00	1,72	2,33
7	5,00	0,91	5,49	5,00	0,99	5,08	5,00	1,13	4,42	5,00	1,26	3,97	5,00	1,44	3,47	5,00	1,63	3,07
25	5,00	0,67	7,46	5,00	0,71	7,04	5,00	0,78	6,41	5,00	0,86	5,81	5,00	0,98	5,10	5,00	1,10	4,55

WH-MDF06E3E5 / WH-MDC06E3E5																		
Tamb	**HC**	**IP**	**COP**	**HC**	**IP**	**COP**	**HC**	**IP**	**COP**	**HC**	**IP**	**COP**	**HC**	**IP**	**COP**	**HC**	**IP**	**COP**
LWC	**30**	**30**	**30**	**35**	**35**	**35**	**40**	**40**	**40**	**45**	**45**	**45**	**50**	**50**	**50**	**55**	**55**	**55**
-15	6,15	2,50	2,46	5,90	2,66	2,22	5,65	2,82	2,00	5,40	2,98	1,81	5,20	3,15	1,65	5,00	3,32	1,51
-7	5,18	1,68	3,09	5,15	1,92	2,68	5,13	2,17	2,37	5,10	2,41	2,12	5,45	2,81	1,94	5,80	3,20	1,81
2	5,00	1,23	4,08	5,00	1,45	3,45	5,00	1,68	2,99	5,00	1,90	2,63	5,00	2,19	2,28	5,00	2,48	2,02
7	6,00	1,13	5,33	6,00	1,35	4,46	6,00	1,58	3,81	6,00	1,80	3,33	6,00	2,09	2,87	6,00	2,38	2,52
25	7,30	0,78	9,42	7,10	0,93	7,63	6,90	1,09	6,36	6,70	1,24	5,40	6,50	1,41	4,61	6,30	1,58	3,99

WH-MDF09E3E5 / WH-MDC09E3E5																		
Tamb	**HC**	**IP**	**COP**	**HC**	**IP**	**COP**	**HC**	**IP**	**COP**	**HC**	**IP**	**COP**	**HC**	**IP**	**COP**	**HC**	**IP**	**COP**
LWC	**30**	**30**	**30**	**35**	**35**	**35**	**40**	**40**	**40**	**45**	**45**	**45**	**50**	**50**	**50**	**55**	**55**	**55**
-15	7,90	3,62	2,19	7,60	3,77	2,02	7,30	3,93	1,86	7,00	4,08	1,72	6,45	4,06	1,59	5,90	4,03	1,46
-7	7,80	3,38	2,31	7,70	3,63	2,12	7,60	3,88	1,96	7,50	4,13	1,82	7,55	4,59	1,64	7,60	5,05	1,50
2	7,00	2,01	3,49	2,45	2,37	3,14	7,00	2,60	2,70	7,00	2,89	2,42	7,00	3,37	2,08	7,00	3,85	1,82
7	9,00	1,87	4,83	9,00	2,17	4,16	9,00	2,48	3,64	9,00	2,78	3,24	8,95	3,31	2,70	8,90	3,84	2,32
25	9,00	0,99	9,09	9,00	1,31	6,87	9,00	1,63	5,52	9,00	1,95	4,62	9,00	2,20	4,09	9,00	2,45	3,67

Cooling Capacity Curve

Aquarea. High Performance. Mono-Bloc Single Phase. Heating and Cooling - MDC. 5, 6 and 9kW																		
MODELS	**WH-MDC05F3E5**						**WH-MDC06E3E5**						**WH-MDC09E3E5**					
Tamb	**CC**	**IP**	**CC**	**IP**	**CC**	**IP**	**CC**	**IP**	**CC**	**IP**	**CC**	**IP**	**CC**	**IP**	**CC**	**IP**	**CC**	**IP**
LWC	**7**	**7**	**14**	**14**	**18**	**18**	**7**	**7**	**14**	**14**	**18**	**18**	**7**	**7**	**14**	**14**	**18**	**18**
18	1,95	0,45	2,20	0, 45	2,45	0,50	4,64	0,91	5,83	0,99	6,74	0,94	5,36	1,05	6,12	1,08	7,02	1,08
25	5,00	1,25	6,30	1,20	6,30	0,80	5,85	1,43	9,55	1,73	9,81	1,68	6,44	1,85	10,50	2,51	11,16	2,52
35	4,50	1,35	5,10	1,50	5,00	1,00	5,50	2,03	6,70	2,06	7,30	2,05	7,00	2,90	8,40	2,95	9,00	3,00
43	3,75	1,75	4,50	1,80	4,25	1,20	4,56	2,34	6,31	2,47	7,14	2,45	5,32	3,18	6,34	2,48	6,78	2,46

Tamb: Ambient Temperature (°C). LWC: Leaving Water Condenser Temperature (°C). HC: Heating capacity (kW). CC: Cooling Capacity (kW). IP: Power Input (kW)
This data is measured by Panasonic in accordance with EN14511-2 standard. This data is for reference purpose only, and does not guarantee the performance.

Hydraulic pump performance of the F type Heat Pumps: A class pump F (5 kW and 16 kW)

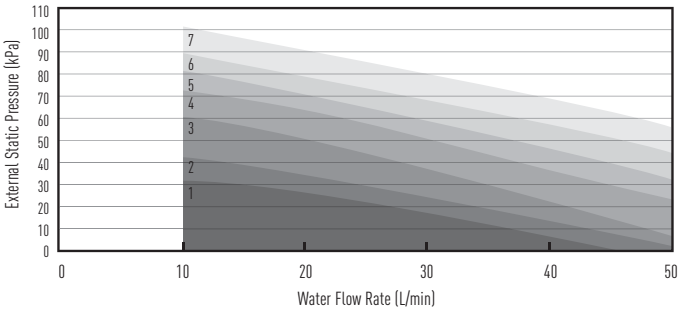

Hydraulic pump performance of the F type Heat Pumps: A class pump F (5 kW and 16 kW)

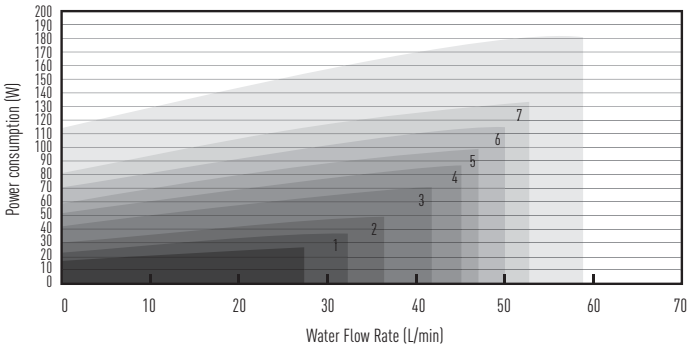

Min Pump Speed 1 Pump Speed 2 Pump Speed 3 Pump Speed 4 Pump Speed 5 Pump Speed 6 Max

Hydraulic Pump Performance. Constant Pressure Head Difference (Δp-c)

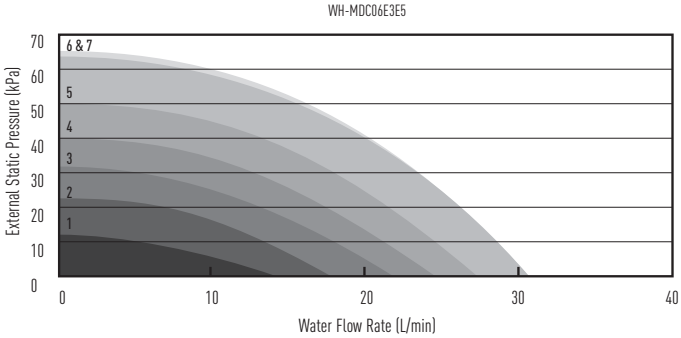

A Δp-c
When pressure loss of system increased, pump speed will be reduced for maintain constant pressure.

Hydraulic Pump Performance. Variable Pressure Head Difference (Δp-c)

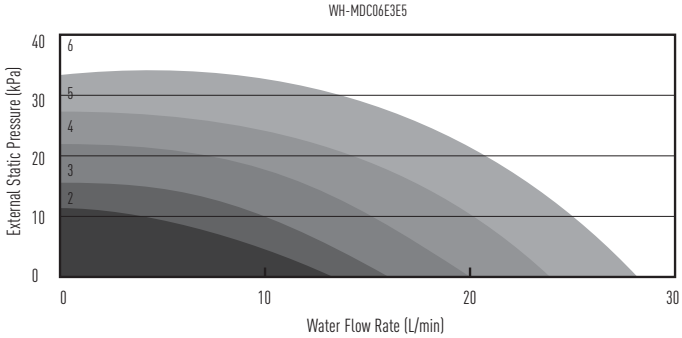

A Δp-c
When pressure loss of system increased, pump speed will be reduced for maintain pressure according to water flow rate.

Heating capacity table based on outlet temperature and outside temperature

Heating capacity Curve

Aquarea. High Performance. Bi-Bloc Single Phase / Three Phase. Heating and Cooling. SDC

WH-SDC07F3E5

Tamb	HC	IP	COP	HC	IP	COP	HC	IP	COP	HC	IP	COP	HC	IP	COP	HC	IP	COP
LWC	30	30	30	35	35	35	40	40	40	45	45	45	50	50	50	55	55	55
-15	4,60	1,85	2,49	4,60	1,98	2,32	4,60	2,17	2,12	4,60	2,40	1,92	4,55	2,66	1,71	4,50	2,98	1,51
-7	5,15	1,78	2,89	5,15	1,92	2,68	5,08	2,12	2,40	5,00	2,36	2,12	4,90	2,45	2,00	4,80	2,65	1,81
2	6,70	1,81	3,70	6,55	1,96	3,34	6,58	2,27	2,90	6,60	2,62	2,52	6,30	2,88	2,19	6,00	3,14	1,91
7	7,00	1,41	4,96	7,00	1,57	4,46	7,00	1,75	4,00	7,00	2,10	3,33	6,90	2,28	3,03	6,80	2,70	2,52
25	7,00	0,77	9,09	7,00	0,91	7,69	6,40	1,01	6,34	6,10	1,15	5,30	5,90	1,31	4,50	5,70	1,47	3,88

WH-SDC09F3E5

Tamb	HC	IP	COP	HC	IP	COP	HC	IP	COP	HC	IP	COP	HC	IP	COP	HC	IP	COP
LWC	30	30	30	35	35	35	40	40	40	45	45	45	50	50	50	55	55	55
-15	6,00	2,53	2,37	5,90	2,66	2,22	5,50	2,80	1,96	5,40	2,98	1,81	5,20	3,12	1,67	5,00	3,31	1,51
-7	6,10	2,14	2,85	5,90	2,34	2,52	5,85	2,61	2,24	5,80	2,88	2,01	5,80	3,04	1,91	5,80	3,21	1,81
2	6,80	1,85	3,68	6,70	2,14	3,13	6,70	2,36	2,84	6,60	2,62	2,52	6,30	2,88	2,19	6,00	3,14	1,91
7	9,00	1,91	4,71	9,00	2,18	4,13	9,00	2,43	3,70	9,00	2,79	3,23	8,95	3,21	2,79	8,90	3,85	2,31
25	9,00	1,05	8,57	9,00	1,25	7,20	8,40	1,38	6,09	8,00	1,57	5,10	7,80	1,79	4,36	7,50	2,01	3,73

WH-SDC12F6E5

Tamb	HC	IP	COP	HC	IP	COP	HC	IP	COP	HC	IP	COP	HC	IP	COP	HC	IP	COP
LWC	30	30	30	35	35	35	40	40	40	45	45	45	50	50	50	55	55	55
-15	9,30	3,46	2,69	8,90	3,62	2,46	8,50	3,79	2,24	8,10	3,95	2,05	7,50	4,05	1,85	7,00	4,16	1,68
-7	10,40	3,37	3,09	10,00	3,66	2,73	9,60	3,86	2,49	9,20	4,06	2,27	8,70	4,16	2,09	8,20	4,27	1,92
2	11,80	3,10	3,81	11,40	3,31	3,44	11,00	3,53	3,12	10,60	3,74	2,83	9,80	3,94	2,49	9,10	4,14	2,20
7	12,00	2,10	5,71	12,00	2,53	4,74	12,00	2,96	4,05	12,00	3,39	3,54	12,00	3,78	3,17	12,00	4,16	2,88
25	12,00	1,38	8,70	12,00	1,66	7,23	11,80	1,94	6,08	11,70	2,23	5,25	11,50	2,49	4,62	11,40	2,74	4,16

WH-SDC14F6E5

Tamb	HC	IP	COP	HC	IP	COP	HC	IP	COP	HC	IP	COP	HC	IP	COP	HC	IP	COP
LWC	30	30	30	35	35	35	40	40	40	45	45	45	50	50	50	55	55	55
-15	9,90	3,87	2,56	9,50	4,01	2,37	9,00	4,15	2,17	8,60	4,29	2,00	7,90	4,41	1,79	7,30	4,52	1,62
-7	11,10	3,69	3,01	10,70	3,96	2,70	10,20	4,16	2,45	9,80	4,36	2,25	9,10	4,53	2,01	8,50	4,70	1,81
2	12,90	3,47	3,72	12,40	3,69	3,36	11,90	3,91	3,04	11,40	4,13	2,76	10,40	4,25	2,45	9,50	4,36	2,18
7	14,00	2,56	5,47	14,00	3,07	4,56	14,00	3,59	3,90	14,00	4,10	3,41	13,60	4,57	2,98	13,30	5,04	2,64
25	14,00	1,71	8,19	14,00	2,06	6,80	14,00	2,41	5,81	14,00	2,76	5,07	14,00	3,01	4,65	14,00	3,40	4,12

WH-SDC16F6E5

Tamb	HC	IP	COP	HC	IP	COP	HC	IP	COP	HC	IP	COP	HC	IP	COP	HC	IP	COP
LWC	30	30	30	35	35	35	40	40	40	45	45	45	50	50	50	55	55	55
-15	10,60	4,09	2,59	10,30	4,38	2,35	10,00	4,67	2,14	9,70	4,96	1,96	8,80	4,94	1,78	7,90	4,91	1,61
-7	11,90	4,03	2,95	11,40	4,26	2,68	10,80	4,46	2,42	10,30	4,66	2,21	9,60	4,81	2,00	9,00	4,95	1,82
2	13,50	3,74	3,61	13,00	3,96	3,28	12,40	4,18	2,97	11,90	4,40	2,70	10,80	4,46	2,42	9,80	4,51	2,17
7	16,00	3,21	4,98	16,00	3,74	4,28	16,00	4,27	3,75	16,00	4,80	3,33	15,20	5,11	2,97	14,50	5,41	2,68
25	16,00	2,31	6,93	16,00	2,69	5,95	16,00	3,07	5,21	16,00	3,45	4,64	16,00	3,67	4,36	15,90	3,89	4,09

WH-SDC09F3E8

Tamb	HC	IP	COP	HC	IP	COP	HC	IP	COP	HC	IP	COP	HC	IP	COP	HC	IP	COP
LWC	30	30	30	35	35	35	40	40	40	45	45	45	50	50	50	55	55	55
-15	8,65	3,06	2,83	8,30	3,21	2,59	7,95	3,41	2,33	7,60	3,61	2,11	7,15	3,71	1,93	6,70	3,81	1,76
-7	9,35	2,91	3,21	9,00	3,16	2,85	8,85	3,46	2,56	8,70	3,76	2,31	8,30	3,81	2,18	7,90	3,86	2,05
2	9,31	2,35	3,96	9,00	2,51	3,59	9,00	2,78	3,24	9,00	3,05	2,95	8,90	3,49	2,55	8,80	3,94	2,23
7	9,00	1,54	5,84	9,00	1,86	4,84	9,00	2,16	4,17	9,00	2,46	3,66	9,00	2,76	3,26	9,00	3,06	2,94
25	9,00	1,05	8,57	9,00	1,24	7,26	8,73	1,44	6,06	8,46	1,64	5,16	8,28	1,82	4,55	8,10	2,00	4,05

WH-SDC12F9E8

Tamb	HC	IP	COP	HC	IP	COP	HC	IP	COP	HC	IP	COP	HC	IP	COP	HC	IP	COP
LWC	30	30	30	35	35	35	40	40	40	45	45	45	50	50	50	55	55	55
-15	9,30	3,46	2,69	8,90	3,62	2,46	8,50	3,79	2,24	8,10	3,95	2,05	7,50	4,05	1,85	7,00	4,16	1,68
-7	10,40	3,37	3,09	10,00	3,66	2,73	9,60	3,86	2,49	9,20	4,06	2,27	8,70	4,16	2,09	8,20	4,27	1,92
2	11,80	3,10	3,81	11,40	3,31	3,44	11,00	3,53	3,12	10,60	3,74	2,83	9,80	3,94	2,49	9,10	4,14	2,20
7	12,00	2,10	5,71	12,00	2,53	4,74	12,00	2,96	4,05	12,00	3,39	3,54	12,00	3,78	3,17	12,00	4,16	2,88
25	12,00	1,38	8,70	12,00	1,66	7,23	11,80	1,94	6,08	11,70	2,23	5,25	11,50	2,49	4,62	11,40	2,74	4,16

WH-SDC14F9E8

Tamb	HC	IP	COP	HC	IP	COP	HC	IP	COP	HC	IP	COP	HC	IP	COP	HC	IP	COP
LWC	30	30	30	35	35	35	40	40	40	45	45	45	50	50	50	55	55	55
-15	9,90	3,87	2,56	9,50	4,01	2,37	9,00	4,15	2,17	8,60	4,29	2,00	7,90	4,41	1,79	7,30	4,52	1,62
-7	11,10	3,69	3,01	10,70	3,96	2,70	10,20	4,16	2,45	9,80	4,36	2,25	9,10	4,53	2,01	8,50	4,70	1,81
2	12,90	3,47	3,72	12,40	3,69	3,36	11,90	3,91	3,04	11,40	4,13	2,76	10,40	4,25	2,45	9,50	4,36	2,18
7	14,00	2,56	5,47	14,00	3,07	4,56	14,00	3,59	3,90	14,00	4,10	3,41	13,60	4,57	2,98	13,30	5,04	2,64
25	14,00	1,71	8,19	14,00	2,06	6,80	14,00	2,41	5,81	14,00	2,76	5,07	14,00	3,01	4,65	14,00	3,40	4,12

WH-SDC16F9E8

Tamb	HC	IP	COP	HC	IP	COP	HC	IP	COP	HC	IP	COP	HC	IP	COP	HC	IP	COP
LWC	30	30	30	35	35	35	40	40	40	45	45	45	50	50	50	55	55	55
-15	10,60	4,09	2,59	10,30	4,38	2,35	10,00	4,67	2,14	9,70	4,96	1,96	8,80	4,94	1,78	7,90	4,91	1,61
-7	11,90	4,03	2,95	11,40	4,26	2,68	10,80	4,46	2,42	10,30	4,66	2,21	9,60	4,81	2,00	9,00	4,95	1,82
2	13,50	3,74	3,61	13,00	3,96	3,28	12,40	4,18	2,97	11,90	4,40	2,70	10,80	4,46	2,42	9,80	4,51	2,17
7	16,00	3,21	4,98	16,00	3,74	4,28	16,00	4,27	3,75	16,00	4,80	3,33	15,20	5,11	2,97	14,50	5,41	2,68
25	16,00	2,31	6,93	16,00	2,69	5,95	16,00	3,07	5,21	16,00	3,45	4,64	16,00	3,67	4,36	15,90	3,89	4,09

Cooling Capacity Curve

Aquarea. High Performance. Bi-Bloc Single Phase / Three Phase. Heating and Cooling. SDC																		
MODELS	WH-SDC07F3E5		WH-SDC09F3E5		WH-SDC12F6E5		WH-SDC14F6E5		WH-SDC16F6E5		WH-SDC09F3E8		WH-SDC12F9E8		WH-SDC14F9E8		WH-SDC16F9E8	
Tamb	CC	IP	CC	IP	CC	IP	CC	IP	CC	IP	CC	IP	CC	IP	CC	IP	CC	IP
LWC	7	7	7	7	7	7	7	7	7	7	7	7	7	7	7	7	7	7
16	5,09	0,86	5,93	1,05	7,65	1,26	8,85	1,46	9,62	1,59	5,90	0,97	7,65	1,26	8,85	1,46	9,62	1,59
25	6,58	1,73	7,79	2,23	9,20	2,26	10,00	2,64	10,51	2,81	7,45	1,55	9,20	2,26	10,00	2,64	10,51	2,81
35	6,00	2,28	7,00	2,88	10,00	3,56	11,50	4,36	12,20	4,76	7,00	2,21	10,00	3,56	11,50	4,36	12,20	4,76
43	5,14	2,67	6,20	3,26	7,60	3,91	9,05	4,97	10,08	5,43	5,80	2,55	7,60	3,91	9,05	4,97	10,08	5,43

Tamb: Ambient Temperature (°C). LWC: Leaving Water Condenser Temperature (°C). HC: Heating capacity (kW). CC: Cooling Capacity (kW). IP: Power Input (kW)
This data is measured by Panasonic in accordance with EN14511-2 standard. This data is for reference purpose only, and does not guarantee the performance.

Hydraulic pump performance of the F type Heat Pumps: A class pump F (5 kW and 16 kW)

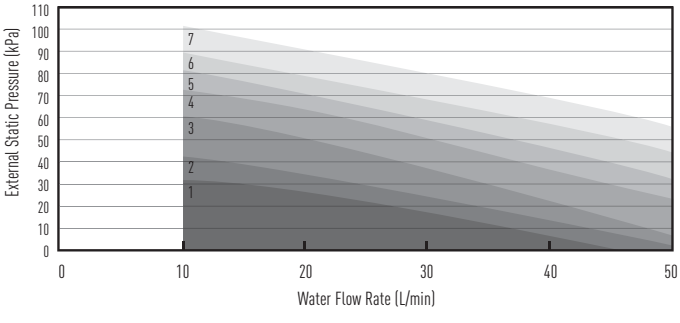

Hydraulic pump performance of the F type Heat Pumps: A class pump F (5 kW and 16 kW)

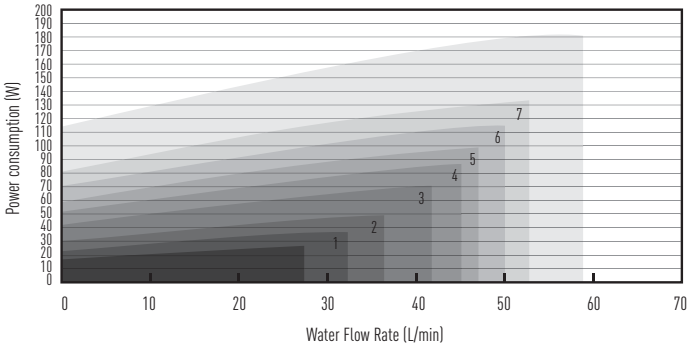

Min Pump Speed 1 Pump Speed 2 Pump Speed 3 Pump Speed 4 Pump Speed 5 Pump Speed 6 Max

Heating capacity table based on outlet temperature and outside temperature

Heating capacity Curve

Aquarea. High Performance. Mono-Bloc Single Phase / Three Phase. Heating Only - MDF. Heating and Cooling - MDC

WH-MDC12C6E5

Tamb	HC	IP	COP	HC	IP	COP	HC	IP	COP	HC	IP	COP	HC	IP	COP	HC	IP	COP
LWC	30	30	30	35	35	35	40	40	40	45	45	45	50	50	50	55	55	55
-15	9,30	3,50	2,66	8,90	3,66	2,43	8,50	3,83	2,22	8,10	3,99	2,03	7,50	4,09	1,83	7,00	4,20	1,67
-7	10,40	3,41	3,05	10,00	3,70	2,70	9,60	3,90	2,46	9,20	4,10	2,24	8,70	4,20	2,07	8,20	4,31	1,90
2	11,80	3,14	3,76	11,40	3,34	3,41	11,00	3,57	3,08	10,60	3,78	2,80	9,80	3,98	2,46	9,10	4,18	2,18
7	12,00	2,14	5,61	12,00	2,57	4,67	12,00	3,00	4,00	12,00	3,43	3,50	12,00	3,82	3,14	12,00	4,20	2,86
25	12,00	1,42	8,45	12,00	1,70	7,06	11,80	1,98	5,96	11,70	2,27	5,15	11,50	2,53	4,55	11,40	2,78	4,10

WH-MDC14C6E5

Tamb	HC	IP	COP	HC	IP	COP	HC	IP	COP	HC	IP	COP	HC	IP	COP	HC	IP	COP
LWC	30	30	30	35	35	35	40	40	40	45	45	45	50	50	50	55	55	55
-15	9,90	3,91	2,53	9,50	4,05	2,35	9,00	4,19	2,15	8,60	4,33	1,99	7,90	4,45	1,78	7,30	4,56	1,60
-7	11,10	3,73	2,98	10,70	4,00	2,68	10,20	4,20	2,43	9,80	4,40	2,23	9,10	4,57	1,99	8,50	4,74	1,79
2	12,90	3,51	3,68	12,40	3,73	3,32	11,90	3,95	3,01	11,40	4,17	2,73	10,40	4,29	2,42	9,50	4,40	2,16
7	14,00	2,60	5,38	14,00	3,11	4,50	14,00	3,63	3,86	14,00	4,14	3,38	13,60	4,61	2,95	13,30	5,08	2,62
25	14,00	1,75	8,00	14,00	2,10	6,67	14,00	2,45	5,71	14,00	2,80	5,00	14,00	3,05	4,59	14,00	3,44	4,07

WH-MDC16C6E5

Tamb	HC	IP	COP	HC	IP	COP	HC	IP	COP	HC	IP	COP	HC	IP	COP	HC	IP	COP
LWC	30	30	30	35	35	35	40	40	40	45	45	45	50	50	50	55	55	55
-15	10,60	4,13	2,57	10,30	4,42	2,33	10,00	4,71	2,12	9,70	5,00	1,94	8,80	4,98	1,77	7,90	4,95	1,60
-7	11,90	4,07	2,92	11,40	4,30	2,65	10,80	4,50	2,40	10,30	4,70	2,19	9,60	4,85	1,98	9,00	4,99	1,80
2	13,50	3,78	3,57	13,00	4,00	3,25	12,40	4,22	2,94	11,90	4,44	2,68	10,80	4,50	2,40	9,80	4,55	2,15
7	16,00	3,25	4,92	16,00	3,78	4,23	16,00	4,31	3,71	16,00	4,84	3,31	15,20	5,15	2,95	14,50	5,45	2,66
25	16,00	2,35	6,81	16,00	2,73	5,86	16,00	3,11	5,14	16,00	3,49	4,58	16,00	3,71	4,31	15,90	3,93	4,05

WH-MDC09C3E8

Tamb	HC	IP	COP	HC	IP	COP	HC	IP	COP	HC	IP	COP	HC	IP	COP	HC	IP	COP
LWC	30	30	30	35	35	35	40	40	40	45	45	45	50	50	50	55	55	55
-15	8,65	3,10	2,79	8,30	3,25	2,55	7,95	3,45	2,30	7,60	3,65	2,08	7,15	3,75	1,91	6,70	3,85	1,74
-7	9,35	2,95	3,17	9,00	3,20	2,81	8,85	3,50	2,53	8,70	3,80	2,29	8,30	3,85	2,16	7,90	3,90	2,03
2	9,31	2,39	3,90	9,00	2,55	3,53	9,00	2,82	3,19	9,00	3,09	2,91	8,90	3,53	2,52	8,80	3,98	2,21
7	9,00	1,58	5,70	9,00	1,90	4,74	9,00	2,20	4,09	9,00	2,50	3,60	9,00	2,80	3,21	9,00	3,10	2,90
25	9,00	1,09	8,26	9,00	1,28	7,03	8,73	1,48	5,90	8,46	1,68	5,04	8,28	1,86	4,45	8,10	2,04	3,97

WH-MDC12C9E8

Tamb	HC	IP	COP	HC	IP	COP	HC	IP	COP	HC	IP	COP	HC	IP	COP	HC	IP	COP
LWC	30	30	30	35	35	35	40	40	40	45	45	45	50	50	50	55	55	55
-15	9,30	3,50	2,66	8,90	3,66	2,43	8,50	3,83	2,22	8,10	3,99	2,03	7,50	4,09	1,83	7,00	4,20	1,67
-7	10,40	3,41	3,05	10,00	3,70	2,70	9,60	3,90	2,46	9,20	4,10	2,24	8,70	4,20	2,07	8,20	4,31	1,90
2	11,80	3,14	3,76	11,40	3,34	3,41	11,00	3,57	3,08	10,60	3,78	2,80	9,80	3,98	2,46	9,10	4,18	2,18
7	12,00	2,14	5,61	12,00	2,57	4,67	12,00	3,00	4,00	12,00	3,43	3,50	12,00	3,82	3,14	12,00	4,20	2,86
25	12,00	1,42	8,45	12,00	1,70	7,06	11,80	1,98	5,96	11,70	2,27	5,15	11,50	2,53	4,55	11,40	2,78	4,10

WH-MDC14C9E8

Tamb	HC	IP	COP	HC	IP	COP	HC	IP	COP	HC	IP	COP	HC	IP	COP	HC	IP	COP
LWC	30	30	30	35	35	35	40	40	40	45	45	45	50	50	50	55	55	55
-15	9,90	3,91	2,53	9,50	4,05	2,35	9,00	4,19	2,15	8,60	4,33	1,99	7,90	4,45	1,78	7,30	4,56	1,60
-7	11,10	3,73	2,98	10,70	4,00	2,68	10,20	4,20	2,43	9,80	4,40	2,23	9,10	4,57	1,99	8,50	4,74	1,79
2	12,90	3,51	3,68	12,40	3,73	3,32	11,90	3,95	3,01	11,40	4,17	2,73	10,40	4,29	2,42	9,50	4,40	2,16
7	14,00	2,60	5,38	14,00	3,11	4,50	14,00	3,63	3,86	14,00	4,14	3,38	13,60	4,61	2,95	13,30	5,08	2,62
25	14,00	1,75	8,00	14,00	2,10	6,67	14,00	2,45	5,71	14,00	2,80	5,00	14,00	3,05	4,59	14,00	3,44	4,07

WH-MDC16C9E8

Tamb	HC	IP	COP	HC	IP	COP	HC	IP	COP	HC	IP	COP	HC	IP	COP	HC	IP	COP
LWC	30	30	30	35	35	35	40	40	40	45	45	45	50	50	50	55	55	55
-15	10,60	4,13	2,57	10,30	4,42	2,33	10,00	4,71	2,12	9,70	5,00	1,94	8,80	4,98	1,77	7,90	4,95	1,60
-7	11,90	4,07	2,92	11,40	4,30	2,65	10,80	4,50	2,40	10,30	4,70	2,19	9,60	4,85	1,98	9,00	4,99	1,80
2	13,50	3,78	3,57	13,00	4,00	3,25	12,40	4,22	2,94	11,90	4,44	2,68	10,80	4,50	2,40	9,80	4,55	2,15
7	16,00	3,25	4,92	16,00	3,78	4,23	16,00	4,31	3,71	16,00	4,84	3,31	15,20	5,15	2,95	14,50	5,45	2,66
25	16,00	2,35	6,81	16,00	2,73	5,86	16,00	3,11	5,14	16,00	3,49	4,58	16,00	3,71	4,31	15,90	3,93	4,05

Hydraulic Pump Performance. 9 kW single phase

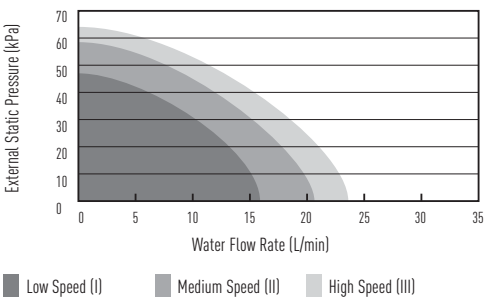

Hydraulic Pump Performance. MDC 12 to MDC 16 single phase and all MDC three phase

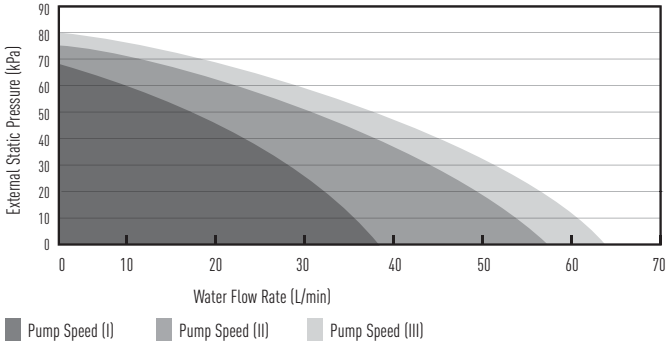

Cooling Capacity Curve

Aquarea. High Performance. Mono-Bloc Single Phase / Three Phase. Cooling. MDC												
Models	WH-MDC09			WH-MDC12			WH-MDC14			WH-MDC16		
Tamb	CC	IP	EER	CC	IP	EER	CC	IP	EER	CC	IP	EER
16	5,90	1,01	5,84	7,65	1,30	5,88	8,85	1,50	5,90	9,62	1,63	5,90
25	7,45	1,59	4,69	9,20	2,30	4,00	10,00	2,68	3,73	10,51	2,85	3,69
35	7,00	2,25	3,11	10,00	3,60	2,78	11,50	4,40	2,61	12,20	4,80	2,54
43	5,80	2,59	2,24	7,60	3,95	1,92	9,05	5,01	1,81	10,08	5,47	1,84

Heating Capacity Curve

Aquarea T-CAP. Mono-Bloc Single Phase / Three Phase. Heating. MXF / MXC																		
WH-MXC09D3E5																		
Tamb	HC	IP	COP	HC	IP	COP	HC	IP	COP	HC	IP	COP	HC	IP	COP	HC	IP	COP
LWC	30	30	30	35	35	35	40	40	40	45	45	45	50	50	50	55	55	55
-15	9,00	3,28	2,74	9,00	3,55	2,54	9,00	3,95	2,28	9,00	4,34	2,07	9,00	4,77	1,89	9,00	5,20	1,73
-7	9,00	2,75	3,27	9,00	3,20	2,81	9,00	3,66	2,46	9,00	4,11	2,19	9,00	4,31	2,09	9,00	4,50	2,00
2	9,00	2,40	3,75	9,00	2,55	3,53	9,00	2,82	3,19	9,00	3,09	2,91	9,00	3,60	2,50	9,00	4,11	2,19
7	9,00	1,68	5,36	9,00	1,90	4,74	9,00	2,20	4,09	9,00	2,50	3,60	9,00	2,80	3,21	9,00	3,10	2,90
25	13,60	1,54	8,83	13,60	1,75	7,77	13,20	1,97	6,70	12,80	2,18	5,87	12,00	2,45	4,90	11,20	2,71	4,13
WH-MXC12D6E5																		
Tamb	HC	IP	COP	HC	IP	COP	HC	IP	COP	HC	IP	COP	HC	IP	COP	HC	IP	COP
LWC	30	30	30	35	35	35	40	40	40	45	45	45	50	50	50	55	55	55
-15	12,00	4,79	2,51	12,00	5,00	2,40	11,50	5,21	2,21	11,00	5,42	2,03	10,70	5,86	1,83	10,50	6,30	1,67
-7	12,00	3,89	3,08	12,00	4,45	2,70	12,00	5,02	2,39	12,00	5,58	2,15	12,00	5,94	2,02	12,00	6,30	1,90
2	12,00	3,23	3,72	12,00	3,53	3,40	12,00	3,91	3,07	12,00	4,29	2,80	12,00	4,90	2,45	12,00	5,51	2,18
7	12,00	2,22	5,41	12,00	2,57	4,67	12,00	3,00	4,00	12,00	3,43	3,50	12,00	3,82	3,14	12,00	4,20	2,86
25	13,60	1,59	8,55	13,60	1,80	7,56	13,40	2,14	6,26	13,20	2,47	5,34	12,60	2,70	4,67	12,00	2,93	4,10
WH-MXC09D3E8																		
Tamb	HC	IP	COP	HC	IP	COP	HC	IP	COP	HC	IP	COP	HC	IP	COP	HC	IP	COP
LWC	30	30	30	35	35	35	40	40	40	45	45	45	50	50	50	55	55	55
-15	9,00	3,28	2,74	9,00	3,55	2,54	9,00	3,95	2,28	9,00	4,34	2,07	9,00	4,77	1,89	9,00	5,20	1,73
-7	9,00	2,75	3,27	9,00	3,20	2,81	9,00	3,66	2,46	9,00	4,11	2,19	9,00	4,31	2,09	9,00	4,50	2,00
2	9,00	2,40	3,75	9,00	2,55	3,53	9,00	2,82	3,19	9,00	3,09	2,91	9,00	3,60	2,50	9,00	4,11	2,19
7	9,00	1,68	5,36	9,00	1,90	4,74	9,00	2,20	4,09	9,00	2,50	3,60	9,00	2,80	3,21	9,00	3,10	2,90
25	13,60	1,54	8,83	13,60	1,75	7,77	13,20	1,97	6,70	12,80	2,18	5,87	12,00	2,45	4,90	11,20	2,71	4,13
WH-MXC12D9E8																		
Tamb	HC	IP	COP	HC	IP	COP	HC	IP	COP	HC	IP	COP	HC	IP	COP	HC	IP	COP
LWC	30	30	30	35	35	35	40	40	40	45	45	45	50	50	50	55	55	55
-15	12,00	4,79	2,51	12,00	5,00	2,40	12,00	5,45	2,20	12,00	5,90	2,03	11,50	6,28	1,83	11,10	6,66	1,67
-7	12,00	3,89	3,08	12,00	4,45	2,70	12,00	5,02	2,39	12,00	5,58	2,15	12,00	5,94	2,02	12,00	6,30	1,90
2	12,00	3,23	3,72	12,00	3,53	3,40	12,00	3,91	3,07	12,00	4,29	2,80	12,00	4,90	2,45	12,00	5,51	2,18
7	12,00	2,22	5,41	12,00	2,57	4,67	12,00	3,00	4,00	12,00	3,43	3,50	12,00	3,82	3,14	12,00	4,20	2,86
25	13,60	1,59	8,55	13,60	1,80	7,56	13,40	2,14	6,26	13,20	2,47	5,34	12,60	2,70	4,67	12,00	2,93	4,10

Cooling Capacity Curve

Aquarea T-CAP. Mono-Bloc Single Phase / Three Phase. Cooling. MXC						
MODELS	WH-MXC09			WH-MXC12		
Tamb	CC	IP	EER	CC	IP	EER
16	7,00	1,40	5,00	7,50	1,45	5,17
25	7,65	1,95	3,92	8,90	2,20	4,05
35	7,00	2,25	3,11	10,00	3,60	2,78
43	6,25	2,70	2,31	8,00	3,05	2,62

Tamb: Ambient Temperature (°C). LWC: Leaving Water Condenser Temperature (°C). HC: Heating capacity (kW). CC: Cooling Capacity (kW). IP: Power Input (kW)
This data is measured by Panasonic in accordance with EN14511-2 standard. This data is for reference purpose only, and does not guarantee the performance.

Hydraulic Pump Performance. MXC 12 to MXC 16 single phase and all MXC three phase

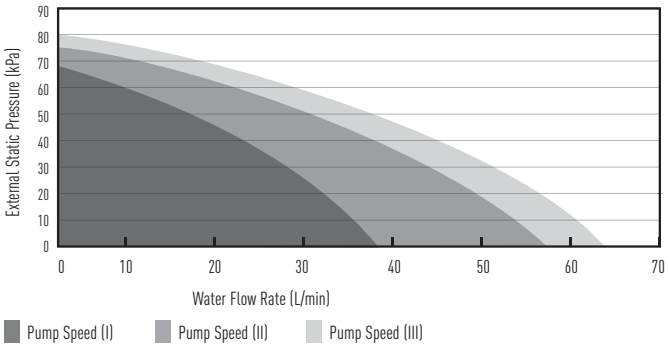

Heating capacity table based on outlet temperature and outside temperature

Heating Capacity Curve

Aquarea T-CAP. Bi-Bloc Single Phase / Three Phase. Heating and Cooling. SXC

WH-SXC09F3E5

Tamb	HC	IP	COP	HC	IP	COP	HC	IP	COP	HC	IP	COP	HC	IP	COP	HC	IP	COP
LWC	30	30	30	35	35	35	40	40	40	45	45	45	50	50	50	55	55	55
-15	9,00	3,24	2,78	9,00	3,51	2,56	9,00	3,91	2,30	9,00	4,30	2,09	9,00	4,73	1,90	9,00	5,16	1,74
-7	9,00	2,71	3,32	9,00	3,16	2,85	9,00	3,62	2,49	9,00	4,07	2,21	9,00	4,27	2,11	9,00	4,46	2,02
2	9,00	2,36	3,81	9,00	2,51	3,59	9,00	2,78	3,24	9,00	3,05	2,95	9,00	3,56	2,53	9,00	4,07	2,21
7	9,00	1,64	5,49	9,00	1,86	4,84	9,00	2,16	4,17	9,00	2,46	3,66	9,00	2,76	3,26	9,00	3,06	2,94
25	13,60	1,50	9,07	13,60	1,71	7,95	13,20	1,93	6,84	12,80	2,14	5,98	12,00	2,41	4,98	11,20	2,67	4,19

WH-SXC12F6E5

Tamb	HC	IP	COP	HC	IP	COP	HC	IP	COP	HC	IP	COP	HC	IP	COP	HC	IP	COP
LWC	30	30	30	35	35	35	40	40	40	45	45	45	50	50	50	55	55	55
-15	12,00	4,75	2,53	12,00	4,96	2,42	11,50	5,17	2,22	11,00	5,38	2,04	10,70	5,82	1,84	10,50	6,26	1,68
-7	12,00	3,85	3,12	12,00	4,41	2,72	12,00	4,98	2,41	12,00	5,54	2,17	12,00	5,90	2,03	12,00	6,26	1,92
2	12,00	3,19	3,76	12,00	3,49	3,44	12,00	3,87	3,10	12,00	4,25	2,82	12,00	4,86	2,47	12,00	5,47	2,19
7	12,00	2,18	5,50	12,00	2,53	4,74	12,00	2,96	4,05	12,00	3,39	3,54	12,00	3,78	3,17	12,00	4,16	2,88
25	13,60	1,55	8,77	13,60	1,76	7,73	13,40	2,10	6,38	13,20	2,43	5,43	12,60	2,66	4,74	12,00	2,89	4,15

WH-SXC09F3E8

Tamb	HC	IP	COP	HC	IP	COP	HC	IP	COP	HC	IP	COP	HC	IP	COP	HC	IP	COP
LWC	30	30	30	35	35	35	40	40	40	45	45	45	50	50	50	55	55	55
-15	9,00	3,24	2,78	9,00	3,51	2,56	9,00	3,91	2,30	9,00	4,30	2,09	9,00	4,73	1,90	9,00	5,16	1,74
-7	9,00	2,71	3,32	9,00	3,16	2,85	9,00	3,62	2,49	9,00	4,07	2,21	9,00	4,27	2,11	9,00	4,46	2,02
2	9,00	2,36	3,81	9,00	2,51	3,59	9,00	2,78	3,24	9,00	3,05	2,95	9,00	3,56	2,53	9,00	4,07	2,21
7	9,00	1,64	5,49	9,00	1,86	4,84	9,00	2,16	4,17	9,00	2,46	3,66	9,00	2,76	3,26	9,00	3,06	2,94
25	13,60	1,50	9,07	13,60	1,71	7,95	13,20	1,93	6,84	12,80	2,14	5,98	12,00	2,41	4,98	11,20	2,67	4,19

WH-SXC12F9E8

Tamb	HC	IP	COP	HC	IP	COP	HC	IP	COP	HC	IP	COP	HC	IP	COP	HC	IP	COP
LWC	30	30	30	35	35	35	40	40	40	45	45	45	50	50	50	55	55	55
-15	12,00	4,75	2,53	12,00	4,96	2,42	12,00	5,41	2,22	12,00	5,86	2,05	11,50	6,24	1,84	11,10	6,62	1,68
-7	12,00	3,85	3,12	12,00	4,41	2,72	12,00	4,98	2,41	12,00	5,54	2,17	12,00	5,90	2,03	12,00	6,26	1,92
2	12,00	3,19	3,76	12,00	3,49	3,44	12,00	3,87	3,10	12,00	4,25	2,82	12,00	4,86	2,47	12,00	5,47	2,19
7	12,00	2,18	5,50	12,00	2,53	4,74	12,00	2,96	4,05	12,00	3,39	3,54	12,00	3,78	3,17	12,00	4,16	2,88
25	13,60	1,55	8,77	13,60	1,76	7,73	13,40	2,10	6,38	13,20	2,43	5,43	12,60	2,66	4,74	12,00	2,89	4,15

WH-SXC16F9E8

Tamb	HC	IP	COP	HC	IP	COP	HC	IP	COP	HC	IP	COP	HC	IP	COP	HC	IP	COP
LWC	30	30	30	35	35	35	40	40	40	45	45	45	50	50	50	55	55	55
-15	16,00	6,50	2,46	16,00	6,89	2,32	16,00	7,50	2,13	16,00	8,10	1,98	15,60	8,76	1,78	15,20	9,41	1,62
-7	16,00	5,85	2,74	16,00	6,42	2,49	16,00	7,00	2,29	16,00	7,57	2,11	16,00	8,31	1,93	16,00	9,05	1,77
2	16,00	4,59	3,49	16,00	5,16	3,10	16,00	5,74	2,79	16,00	6,31	2,54	16,00	7,10	2,26	16,00	7,88	2,03
7	16,00	3,21	4,98	16,00	3,74	4,28	16,00	4,27	3,75	16,00	4,80	3,33	16,00	5,51	2,91	16,00	6,21	2,58
25	16,00	1,90	8,42	16,00	2,40	6,67	16,00	2,90	5,52	16,00	3,40	4,71	16,00	3,86	4,15	16,00	4,31	3,71

Cooling Capacity Curve

Aquarea T-CAP. Bi-Bloc Single Phase / Three Phase. Cooling. SXC

Models	WH-SXC09			WH-SXC12			WH-SXC16		
Tamb	CC	IP	EER	CC	IP	EER	CC	IP	EER
16	7,00	1,36	5,15	7,50	1,41	5,32	9,62	1,59	6,05
25	7,65	1,91	4,01	8,90	2,16	4,12	10,51	2,81	3,74
35	7,00	2,21	3,17	10,00	3,56	2,81	12,20	4,76	2,56
43	6,25	2,66	2,35	8,00	3,01	2,66	10,08	5,43	1,86

Tamb: Ambient Temperature (°C). LWC: Leaving Water Condenser Temperature (°C). HC: Heating capacity (kW). CC: Cooling Capacity (kW). IP: Power Input (kW)
This data is measured by Panasonic in accordance with EN14511-2 standard. This data is for reference purpose only, and does not guarantee the performance.

Hydraulic pump performance of the F type Heat Pumps: A class pump F (5 kW and 16 kW)

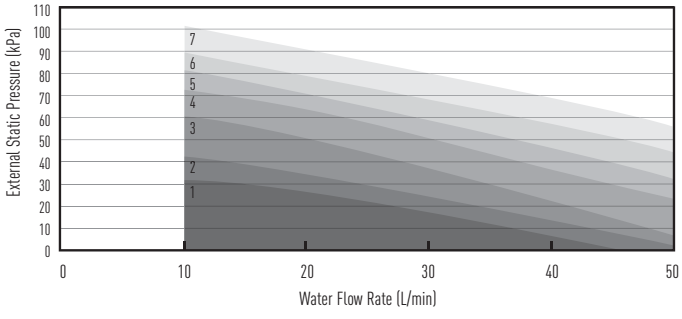

Hydraulic pump performance of the F type Heat Pumps: A class pump F (5 kW and 16 kW)

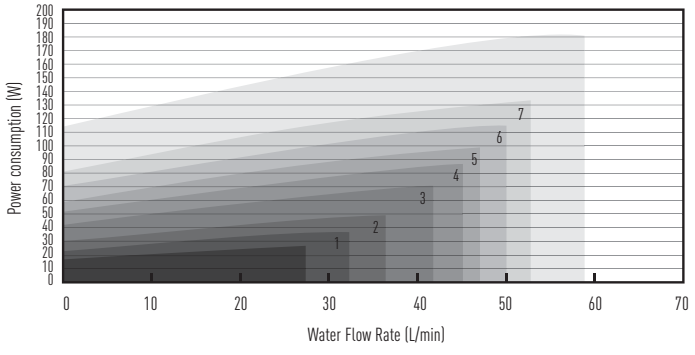

Min | Pump Speed 1 | Pump Speed 2 | Pump Speed 3 | Pump Speed 4 | Pump Speed 5 | Pump Speed 6 | Max

Heating Capacity Curve

Aquarea HT. Bi-Bloc Single Phase / Three Phase. Heating Only - SHF

WH-SHF09F3E5

Tamb	HC	IP	COP	HC	IP	COP	HC	IP	COP	HC	IP	COP	HC	IP	COP	HC	IP	COP	HC	IP	COP	HC	IP	COP
LWC	30	30	30	35	35	35	40	40	40	45	45	45	50	50	50	55	55	55	60	60	60	65	65	65
-15	9,00	3,46	2,60	9,00	3,71	2,43	8,90	4,01	2,22	8,80	4,26	2,07	8,60	4,61	1,87	8,50	4,91	1,73	8,00	5,06	1,58	7,80	5,86	1,33
-7	9,00	3,06	2,94	9,00	3,29	2,74	9,00	3,56	2,53	8,90	3,83	2,32	8,90	4,11	2,17	8,90	4,46	2,00	8,90	4,96	1,79	8,90	5,46	1,63
2	9,00	2,43	3,70	9,00	2,61	3,45	9,00	2,91	3,09	9,00	3,21	2,80	9,00	3,55	2,54	9,00	3,88	2,32	9,00	4,35	2,07	9,00	4,76	1,89
7	9,00	1,82	4,95	9,00	1,94	4,64	9,00	2,21	4,07	9,00	2,46	3,66	9,00	2,76	3,26	9,00	3,12	2,88	9,00	3,46	2,60	9,00	3,96	2,27
25	12,00	1,66	7,23	12,00	1,76	6,82	12,00	2,01	5,97	10,80	2,14	5,05	10,60	2,46	4,31	10,20	2,66	3,83	10,00	2,91	3,44	9,80	3,31	2,96

WH-SHF12F6E5

Tamb	HC	IP	COP	HC	IP	COP	HC	IP	COP	HC	IP	COP	HC	IP	COP	HC	IP	COP	HC	IP	COP	HC	IP	COP
LWC	30	30	30	35	35	35	40	40	40	45	45	45	50	50	50	55	55	55	60	60	60	65	65	65
-15	12,00	5,16	2,33	12,00	5,53	2,17	11,00	5,51	2,00	10,80	5,49	1,97	10,30	5,63	1,83	9,70	5,76	1,68	9,00	6,01	1,50	8,00	6,11	1,31
-7	12,00	4,43	2,71	12,00	4,76	2,52	11,50	4,91	2,34	11,20	5,06	2,21	10,80	5,16	2,09	10,10	5,28	1,91	9,85	5,66	1,74	9,60	5,91	1,62
2	12,00	3,42	3,51	12,00	3,68	3,26	11,50	3,86	2,98	11,30	4,14	2,73	11,00	4,51	2,44	10,80	4,86	2,22	10,65	5,31	2,01	10,30	5,59	1,84
7	12,00	2,52	4,76	12,00	2,69	4,46	12,00	3,06	3,92	12,00	3,44	3,49	12,00	3,81	3,15	12,00	4,28	2,80	12,00	4,86	2,47	12,00	5,41	2,22
25	12,00	1,66	7,23	12,00	1,76	6,82	12,00	2,01	5,97	12,00	2,41	4,98	12,00	2,64	4,55	12,00	2,96	4,05	12,00	3,41	3,52	12,00	3,86	3,11

WH-SHF09F3E8

Tamb	HC	IP	COP	HC	IP	COP	HC	IP	COP	HC	IP	COP	HC	IP	COP	HC	IP	COP	HC	IP	COP	HC	IP	COP
LWC	30	30	30	35	35	35	40	40	40	45	45	45	50	50	50	55	55	55	60	60	60	65	65	65
-15	9,00	3,46	2,60	9,00	3,71	2,43	8,90	4,01	2,22	8,80	4,26	2,07	8,60	4,61	1,87	8,50	4,91	1,73	8,00	5,06	1,58	7,80	5,86	1,33
-7	9,00	3,06	2,94	9,00	3,29	2,74	9,00	3,56	2,53	8,90	3,83	2,32	8,90	4,11	2,17	8,90	4,46	2,00	8,90	4,96	1,79	8,90	5,46	1,63
2	9,00	2,43	3,70	9,00	2,61	3,45	9,00	2,91	3,09	9,00	3,21	2,80	9,00	3,55	2,54	9,00	3,88	2,32	9,00	4,35	2,07	9,00	4,76	1,89
7	9,00	1,82	4,95	9,00	1,94	4,64	9,00	2,21	4,07	9,00	2,46	3,66	9,00	2,76	3,26	9,00	3,12	2,88	9,00	3,46	2,60	9,00	3,96	2,27
25	12,00	1,66	7,23	12,00	1,76	6,82	12,00	2,01	5,97	10,80	2,14	5,05	10,60	2,46	4,31	10,20	2,66	3,83	10,00	2,91	3,44	9,80	3,31	2,96

WH-SHF12F9E8

Tamb	HC	IP	COP	HC	IP	COP	HC	IP	COP	HC	IP	COP	HC	IP	COP	HC	IP	COP	HC	IP	COP	HC	IP	COP
LWC	30	30	30	35	35	35	40	40	40	45	45	45	50	50	50	55	55	55	60	60	60	65	65	65
-15	12,00	5,16	2,33	12,00	5,53	2,17	11,00	5,51	2,00	10,80	5,49	1,97	10,30	5,63	1,83	9,70	5,76	1,68	9,00	6,01	1,50	8,00	6,11	1,31
-7	12,00	4,43	2,71	12,00	4,76	2,52	11,50	4,91	2,34	11,20	5,06	2,21	10,80	5,16	2,09	10,10	5,28	1,91	9,85	5,66	1,74	9,60	5,91	1,62
2	12,00	3,42	3,51	12,00	3,68	3,26	11,50	3,86	2,98	11,30	4,14	2,73	11,00	4,51	2,44	10,80	4,86	2,22	10,65	5,31	2,01	10,30	5,59	1,84
7	12,00	2,52	4,76	12,00	2,69	4,46	12,00	3,06	3,92	12,00	3,44	3,49	12,00	3,81	3,15	12,00	4,28	2,80	12,00	4,86	2,47	12,00	5,41	2,22
25	12,00	1,66	7,23	12,00	1,76	6,82	12,00	2,01	5,97	12,00	2,41	4,98	12,00	2,64	4,55	12,00	2,96	4,05	12,00	3,41	3,52	12,00	3,86	3,11

Tamb: Ambient Temperature (°C). LWC: Leaving Water Condenser Temperature (°C). HC: Heating capacity (kW). IP: Power Input (kW)
This data is measured by Panasonic in accordance with EN14511-2 standard. This data is for reference purpose only, and does not guarantee the performance.

Hydraulic pump performance of the F type Heat Pumps: A class pump F (5 kW and 16 kW)

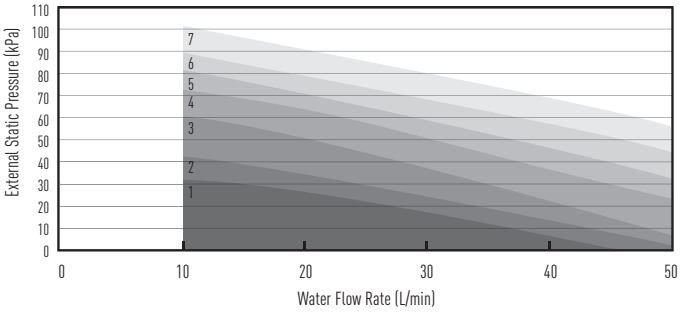

Hydraulic pump performance of the F type Heat Pumps: A class pump F (5 kW and 16 kW)

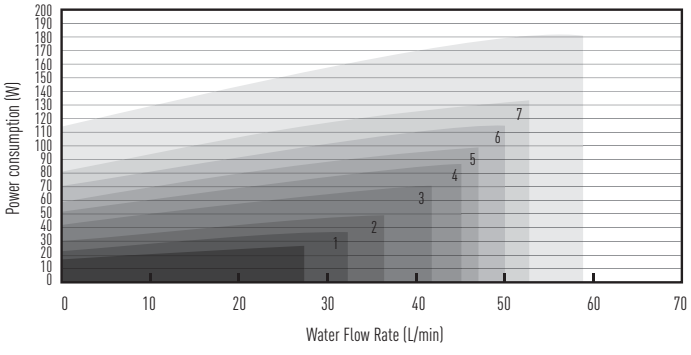

Min Pump Speed 1 Pump Speed 2 Pump Speed 3 Pump Speed 4 Pump Speed 5 Pump Speed 6 Max

Heating capacity table based on outlet temperature and outside temperature

Heating Capacity Curve

Aquarea Ht. Mono-Bloc Single Phase / Three Phase. Heating Only - MHF

WH-MHF09D3E5

Tamb	HC	IP	COP	HC	IP	COP	HC	IP	COP	HC	IP	COP	HC	IP	COP	HC	IP	COP	HC	IP	COP	HC	IP	COP
LWC	30	30	30	35	35	35	40	40	40	45	45	45	50	50	50	55	55	55	60	60	60	65	65	65
-15	9,00	3,50	2,57	9,00	3,75	2,40	8,90	4,05	2,20	8,80	4,30	2,05	8,60	4,65	1,85	8,50	4,95	1,72	8,00	5,10	1,57	7,80	5,90	1,32
-7	9,00	3,10	2,90	9,00	3,33	2,70	9,00	3,60	2,50	8,90	3,87	2,30	8,90	4,15	2,14	8,90	4,50	1,98	8,90	5,00	1,78	8,90	5,50	1,62
2	9,00	2,47	3,64	9,00	2,65	3,40	9,00	2,95	3,05	9,00	3,25	2,77	9,00	3,59	2,51	9,00	3,92	2,30	9,00	4,39	2,05	9,00	4,80	1,88
7	9,00	1,86	4,84	9,00	1,98	4,55	9,00	2,25	4,00	9,00	2,50	3,60	9,00	2,80	3,21	9,00	3,16	2,85	9,00	3,50	2,57	9,00	4,00	2,25
25	12,00	1,70	7,06	12,00	1,80	6,67	12,00	2,05	5,85	10,80	2,18	4,95	10,60	2,50	4,24	10,20	2,70	3,78	10,00	2,95	3,39	9,80	3,35	2,93

WH-MHF12D6E5

Tamb	HC	IP	COP	HC	IP	COP	HC	IP	COP	HC	IP	COP	HC	IP	COP	HC	IP	COP	HC	IP	COP	HC	IP	COP
LWC	30	30	30	35	35	35	40	40	40	45	45	45	50	50	50	55	55	55	60	60	60	65	65	65
-15	12,00	5,20	2,31	12,00	5,57	2,15	11,00	5,55	1,98	10,80	5,53	1,95	10,30	5,67	1,82	9,70	5,80	1,67	9,00	6,05	1,49	8,00	6,15	1,30
-7	12,00	4,47	2,68	12,00	4,80	2,50	11,50	4,95	2,32	11,20	5,10	2,20	10,80	5,20	2,08	10,10	5,32	1,90	9,85	5,70	1,73	9,60	5,95	1,61
2	12,00	3,46	3,47	12,00	3,72	3,23	11,50	3,90	2,95	11,30	4,18	2,70	11,00	4,55	2,42	10,80	4,90	2,20	10,65	5,35	1,99	10,30	5,63	1,83
7	12,00	2,56	4,69	12,00	2,73	4,40	12,00	3,10	3,87	12,00	3,48	3,45	12,00	3,85	3,12	12,00	4,32	2,78	12,00	4,90	2,45	12,00	5,45	2,20
25	12,00	1,70	7,06	12,00	1,80	6,67	12,00	2,05	5,85	12,00	2,45	4,90	12,00	2,68	4,48	12,00	3,00	4,00	12,00	3,45	3,48	12,00	3,90	3,08

WH-MHF09D3E8

Tamb	HC	IP	COP	HC	IP	COP	HC	IP	COP	HC	IP	COP	HC	IP	COP	HC	IP	COP	HC	IP	COP	HC	IP	COP
LWC	35	35	35	35	35	35	40	40	40	45	45	45	50	50	50	55	55	55	60	60	60	65	65	65
-15	9,00	3,50	2,57	9,00	3,75	2,40	8,90	4,05	2,20	8,80	4,30	2,05	8,60	4,65	1,85	8,50	4,95	1,72	8,00	5,10	1,57	7,80	5,90	1,32
-7	9,00	3,10	2,90	9,00	3,33	2,70	9,00	3,60	2,50	8,90	3,87	2,30	8,90	4,15	2,14	8,90	4,50	1,98	8,90	5,00	1,78	8,90	5,50	1,62
2	9,00	2,47	3,64	9,00	2,65	3,40	9,00	2,95	3,05	9,00	3,25	2,77	9,00	3,59	2,51	9,00	3,92	2,30	9,00	4,39	2,05	9,00	4,80	1,88
7	9,00	1,86	4,84	9,00	1,98	4,55	9,00	2,25	4,00	9,00	2,50	3,60	9,00	2,80	3,21	9,00	3,16	2,85	9,00	3,50	2,57	9,00	4,00	2,25
25	12,00	1,70	7,06	12,00	1,80	6,67	12,00	2,05	5,85	10,80	2,18	4,95	10,60	2,50	4,24	10,20	2,70	3,78	10,00	2,95	3,39	9,80	3,35	2,93

WH-MHF12D9E8

Tamb	HC	IP	COP	HC	IP	COP	HC	IP	COP	HC	IP	COP	HC	IP	COP	HC	IP	COP	HC	IP	COP	HC	IP	COP
LWC	35	35	35	35	35	35	40	40	40	45	45	45	50	50	50	55	55	55	60	60	60	65	65	65
-15	12,00	5,20	2,31	12,00	5,57	2,15	11,00	5,55	1,98	10,80	5,53	1,95	10,30	5,67	1,82	9,70	5,80	1,67	9,00	6,05	1,49	8,00	6,15	1,30
-7	12,00	4,47	2,68	12,00	4,80	2,50	11,50	4,95	2,32	11,20	5,10	2,20	10,80	5,20	2,08	10,10	5,32	1,90	9,85	5,70	1,73	9,60	5,95	1,61
2	12,00	3,46	3,47	12,00	3,72	3,23	11,50	3,90	2,95	11,30	4,18	2,70	11,00	4,55	2,42	10,80	4,90	2,20	10,65	5,35	1,99	10,30	5,63	1,83
7	12,00	2,56	4,69	12,00	2,73	4,40	12,00	3,10	3,87	12,00	3,48	3,45	12,00	3,85	3,12	12,00	4,32	2,78	12,00	4,90	2,45	12,00	5,45	2,20
25	12,00	1,70	7,06	12,00	1,80	6,67	12,00	2,05	5,85	12,00	2,45	4,90	12,00	2,68	4,48	12,00	3,00	4,00	12,00	3,45	3,48	12,00	3,90	3,08

Tamb: Ambient Temperature (°C). LWC: Leaving Water Condenser Temperature (°C). HC: Heating capacity (kW). IP: Power Input (kW)
This data is measured by Panasonic in accordance with EN14511-2 standard. This data is for reference purpose only, and does not guarantee the performance.

Hydraulic Pump Performance

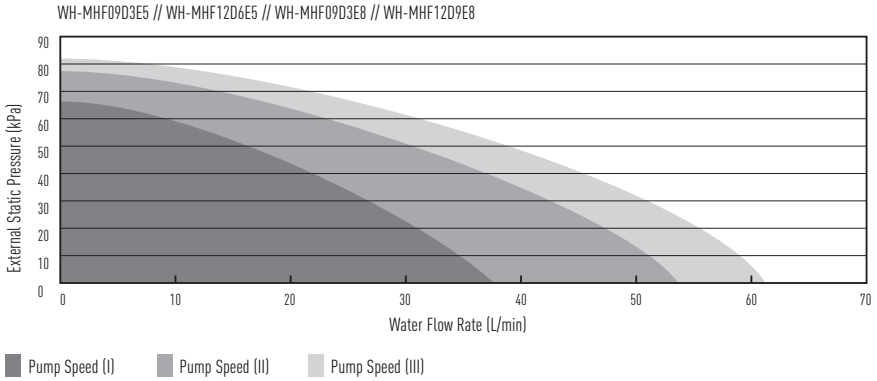

Error Codes

The operation led blinks and an error code appears on the control panel display.

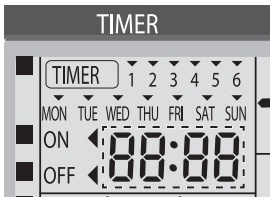

- Turn the unit off and inform the authorised dealer of the error code.
- The timer operation is cancelled when an error code occurs.

Force Heater mode button

FORCE

- The backup heater also serves as backup in case of malfunctioning of the outdoor unit.
- Press OFF/ON to stop the force heater operation.
- During Force Heater mode, all other operations are not allowed.

Error Code List

Diagnosis display	Abnormality / Protection control	Abnormality Judgement	Primary location to verify
H00	No abnormality detected	—	—
H12	Indoor/Outdoor capacity unmatched	90s after power supply	• Indoor/outdoor connection wire • Indoor/outdoor PCB • Specification and combination table in catalogue
H15	Outdoor compressor temperature sensor abnormality	Continue for 5 sec.	• Compressor temperature sensor (defective or disconnected)
H23	Indoor refrigerant liquid temperature sensor abnormality	Continue for 5 sec.	• Refrigerant liquid temperature sensor (defective or disconnected)
H38	Indoor/Outdoor mismatch	—	• Indoor/Outdoor PCB
H42	Compressor low pressure abnormality	—	• Outdoor pipe temperature sensor • Clogged expansion valve or strainer • Insufficient refrigerant • Outdoor PCB • Compressor
H62	Water flow switch abnormality	Continue for 1 min.	• Water flow switch
H64	Refrigerant high pressure abnormality	Continue for 5 sec.	• Outdoor high pressure sensor (defective or disconnected)
H70	Back-up heater OLP abnormality	Continue for 60 sec.	• Back-up heater OLP (Disconnection or activated)
H72	Tank sensor abnormal	Continue for 5 sec.	• Tank sensor
H76	Indoor - control panel communication abnormality	—	• Indoor - control panel (defective or disconnected)
H90	Indoor / outdoor abnormal communication	> 1 min after starting operation	• Internal / external cable connections • Indoor / Outdoor PCB
H91	Tank heater OLP abnormality	Continue for 60 sec.	• Tank heater OLP (Disconnection or activated)
H95	Indoor/Outdoor wrong connection	—	• Indoor/Outdoor supply voltage
H98	Outdoor high pressure overload protection	—	• Outdoor high pressure sensor • Water pump or water leakage • Clogged expansion valve or strainer • Excess refrigerant • Outdoor PCB
H99	Indoor heat exchanger freeze prevention	—	• Indoor heat exchanger • Refrigerant shortage
F12	Pressure switch activate	4 times occurrence within 20 minutes	• Pressure switch
F14	Outdoor compressor abnormal revolution	4 times occurrence within 20 minutes	• Outdoor compressor
F15	Outdoor fan motor lock abnormality	2 times occurrence within 30 minutes	• Outdoor PCB • Outdoor fan motor
F16	Total running current protection	3 times occurrence within 20 minutes	• Excess refrigerant • Outdoor PCB
F20	Outdoor compressor overheating protection	4 times occurrence within 30 minutes	• Compressor tank temperature sensor • Clogged expansion valve or strainer • Insufficient refrigerant • Outdoor PCB • Compressor
F22	IPM (power transistor) overheating protection	3 times occurrence within 30 minutes	• Improper heat exchange • IPM (Power transistor)
F23	Outdoor Direct Current (DC) peak detection	7 times occurrence continuously	• Outdoor PCB • Compressor
F24	Refrigeration cycle abnormality	2 times occurrence within 20 minutes	• Insufficient refrigerant • Outdoor PCB • Compressor low compression
F25	Cooling / Heating cycle changeover abnormality	4 times occurrence within 30 minutes	• 4-way valve • V-coil
F27	Pressure switch abnormality	Continue for 1 min.	• Pressure switch
F36	Outdoor air temperature sensor abnormality	Continue for 5 sec.	• Outdoor air temperature sensor (defective or disconnected)
F37	Indoor water inlet temperature sensor abnormality	Continue for 5 sec.	• Water inlet temperature sensor (defective or disconnected)
F40	Outdoor discharge pipe temperature sensor abnormality	Continue for 5 sec.	• Outdoor discharge pipe temperature sensor (defective or disconnected)
F41	PFC control	4 times occurrence within 10 minutes	• Voltage at PFC
F42	Outdoor heat exchanger temperature sensor abnormality	Continue for 5 sec.	• Outdoor heat exchanger temperature sensor (defective or disconnected)
F43	Outdoor defrost sensor abnormality	Continue for 5 sec.	• Outdoor defrost sensor (defective or disconnected)
F45	Indoor water outlet temperature sensor abnormality	Continue for 5 sec.	• Water outlet temperature sensor (defective or disconnected)
F46	Outdoor Current Transformer open circuit	—	• Insufficient refrigerant • Outdoor PCB • Compressor low
F95	Cooling high pressure overload protection	—	• Outdoor high pressure sensor • Water pump or water leakage • Clogged expansion valve or strainer • Excess refrigerant • Outdoor PCB
F48	Outdoor EVA outlet temperature sensor abnormality	Continue for 5 sec.	• Outdoor EVA outlet temperature sensor (detective or disconnected)
F49	Out bypass outlet temperature sensor abnormality	Continue for 5 sec.	• Outdoor bypass outlet temperature sensor (detective or diconnected)

Dimensions

Hydraulic Module for all models

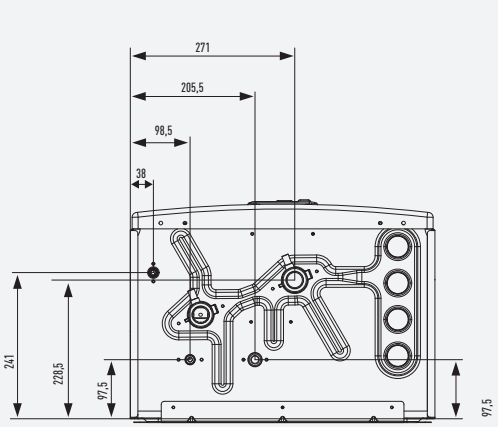

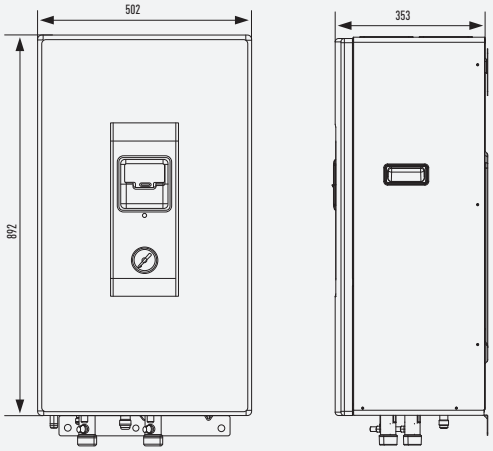

Bi-Bloc 3 and 5kW

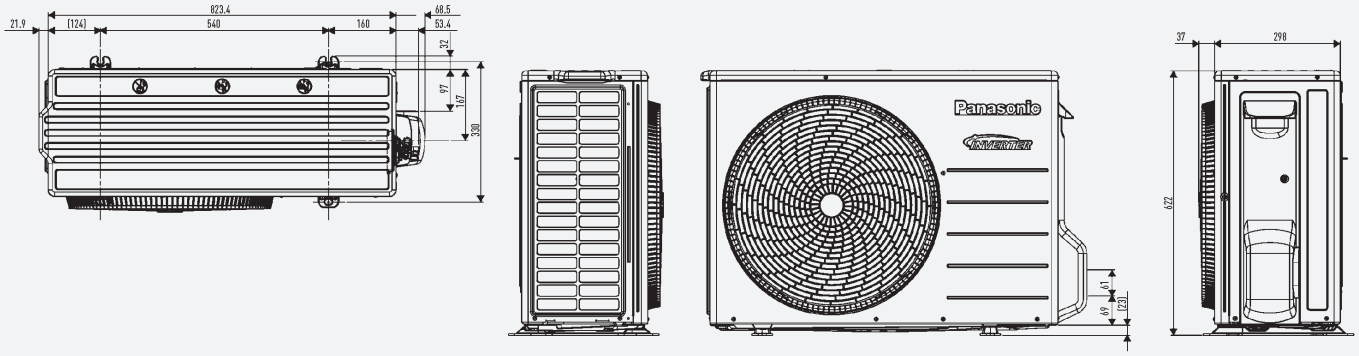

One fan outdoor unit

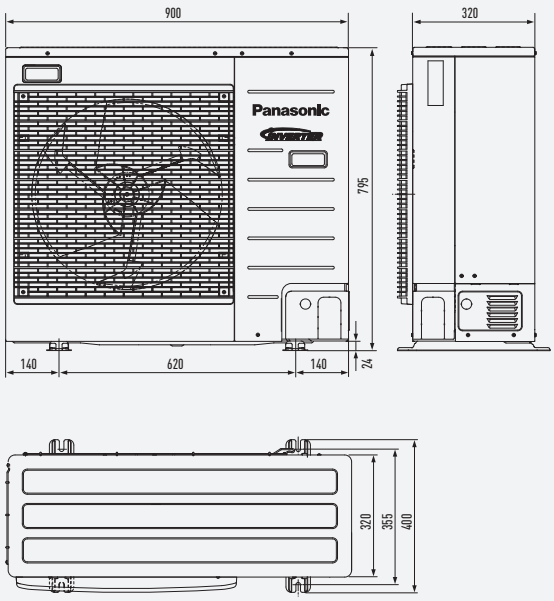

Two fans outdoor unit

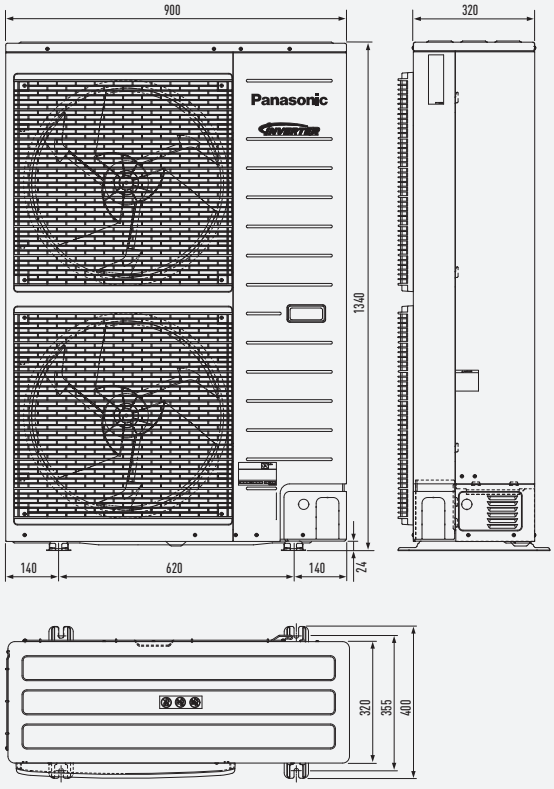

Mono-Bloc 6 and 9kW

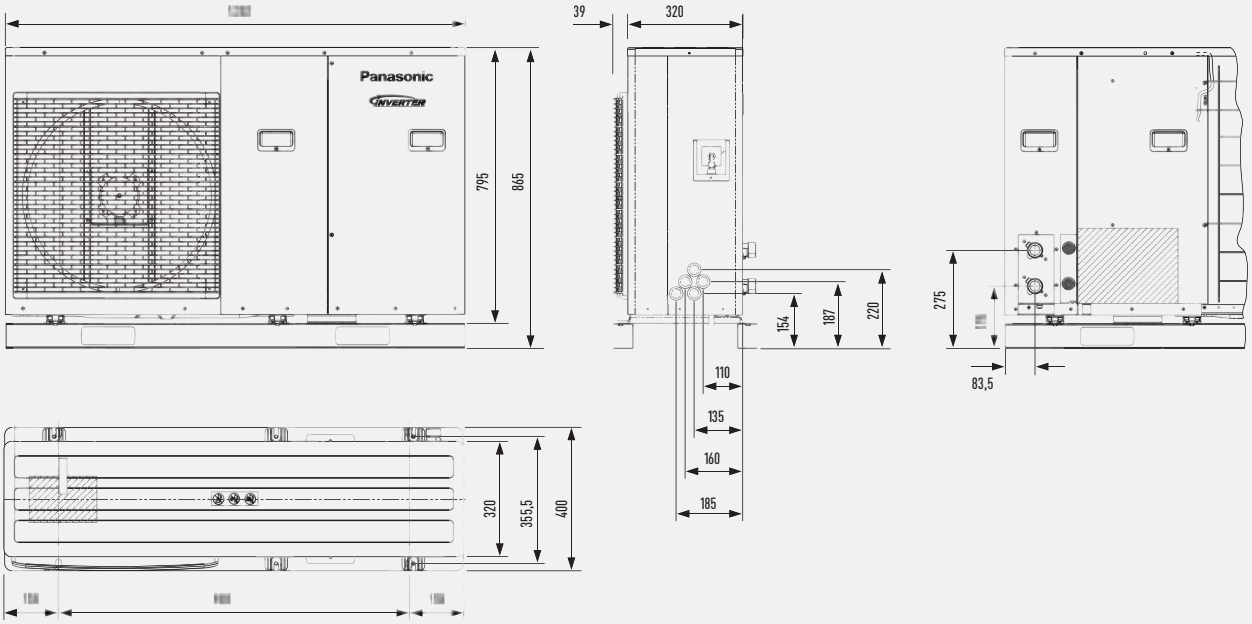

Mono-Bloc 9 to 16kW

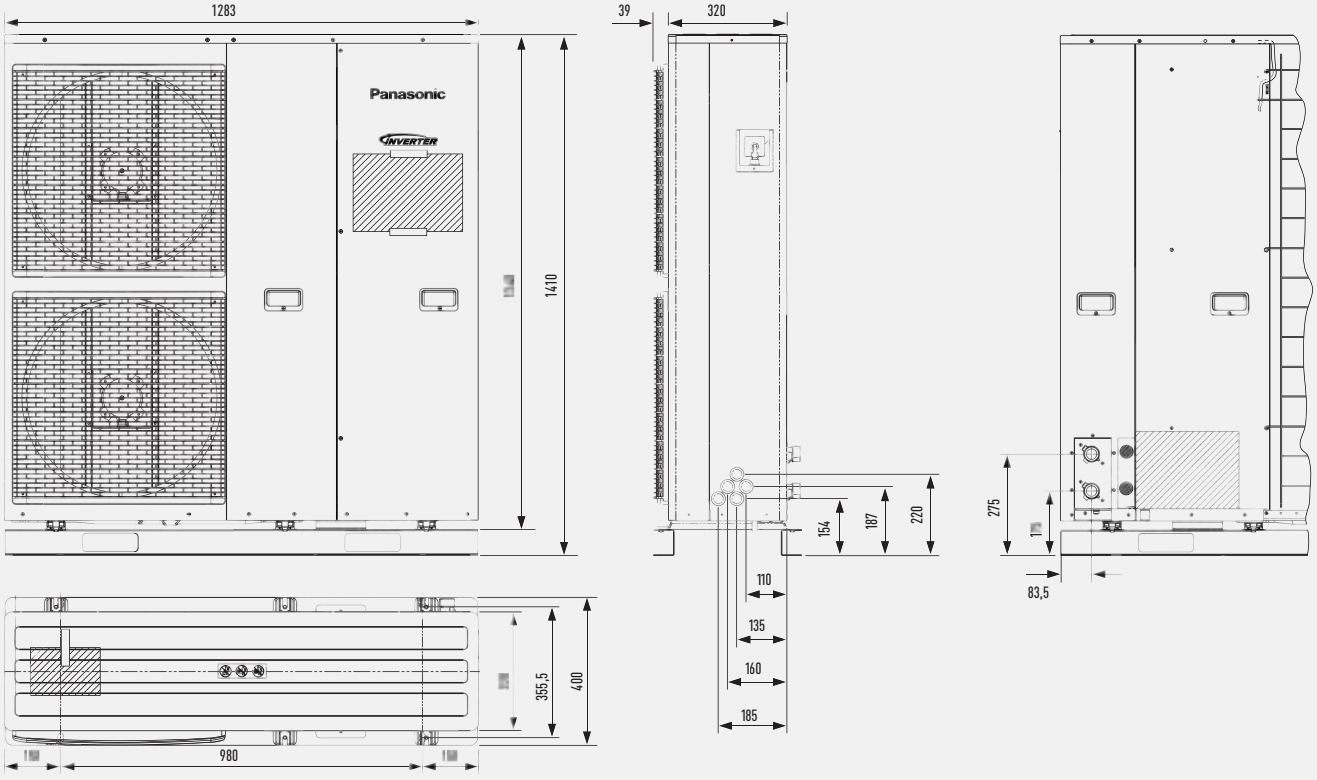

HEALTHY AIR

Air purifier 99% removal bacteria·virus·mold nanoe-G

Nanoe-G utilises nano-technology fine particles to purify the air in the room. It works effectively on airborne and adhesive micro-organisms such as bacteria, viruses and mould thus ensuring a cleaner living environment. Seal of Approval of the British Allergy Foundation

Perfect humidity control MILD DRY

The Perfect Humidity Air controls the humidity level in the air to prevent over-dryness.

ENERGY SAVING

Energy saving INVERTER+

The A Inverter system provides energy savings of up to 50%.Both you and nature wins!

6,60 A++ SEER SEASONAL ENERGY EFFICIENCY RATIO

Exceptional Seasonal Cooling Efficiency based on the new ErP regulation. Higher SEER ratings mean greater efficiency. Save all the year while cooling!

4,00 A+ SCOP SEASONAL COEFFICIENT OF PERFORMANCE

Exceptional Seasonal Heating Efficiency based on the new ErP regulation. Higher SCOP ratings mean greater efficiency. Save all the year while heating!

Up to **38%** energy savings (cooling) ECONAVI

Econavi features intelligent Human Activity Sensor and new Sunlight Sensor technologies that can detect and reduce waste by optimising air conditioner operation according to room conditions. With just one touch of a button, you can save energy efficiently with uninterrupted cooling, comfort and convenience.

Improved comfort AUTOCOMFORT

The Autocomfort system detects conditions in the room and switches to energy saving operation when nobody is on the room.

Silent air **20 dB** SUPER QUIET

With Super Quiet technology our devices are as quiet as a library.

Easy control by BMS CONNECTIVITY

The communication port is integrated into the indoor unit and provides easy connection to, and control of, your Panasonic heat pump to your home or building management system.

Internet Control Ready INTERNET CONTROL

Internet Control is a next generation system providing a user-friendly remote control of air conditioning or heat pump units from everywhere, using a simple Android or iOS smartphone, tablet or PC via internet.

5 year compressor warranty

5 Years Warranty.
We guarantee the compressors in the entire range for five years.

nanoe-G

INTELLIGENT ECO SENSORS ECONAVI



Go green. Go clean. Go your way

Panasonic Air Conditioners are designed to provide more than just comfort cooling to homes. They save energy. They purify your surroundings. They adjust cooling power to suit your living spaces and styles. Living an eco-lifestyle your way is now easier than ever.

product design award 2013

Panasonic Air Conditioning System Wins Prestigious Design Award
Panasonic is pleased to announce that its Etherea air conditioning system has won an iF 2013 Product Design Award.
The iF Product Design Awards are among the most important awards for product design excellence. With strict criteria to judge everything from cosmetic appearance, functionality, through to the environmental impact of the product, awards are only given to those products that demonstrate their innovative design.
Winning the award thanks to its highly intelligent functionality, the Panasonic Etherea is the ideal air-conditioning system for domestic and other localised installations. The unit makes use of multiple sensors, which measure the room's temperature, humidity, as well as detecting human presence.

SEASONAL
EFFICIENCY



WELCOME TO NEW DOMESTIC RANGE

Panasonic has developed a range of products designed for you, better than ever before.
With its innovative design, high efficiency and incomparable purification system, the Etherea range has been designed with your clients in mind. Above all, it is also a range for air conditioning professionals, such as yourself, thanks to its broad range of products which are capable of conditioning rooms of all sizes – always with optimal efficiency and incomparable ease of installation. The Etherea range guarantees that you are offering your clients the very best.



heatcharge

SEASONAL EFFICIENCY



In the picture: TV screen with the Panasonic Internet Control system. Control your comfort and efficiency with the lowest energy consumption
Internet Control is a next generation system providing a user-friendly remote control of air conditioning or heat pump units from everywhere via internet.

Heatcharge and Etherea. Economical, environment-friendly operation high SCOP (Seasonal Coefficiency of Performance)

Original Panasonic Inverter technology and a high performance compressor provide top-class operating efficiency. This lets you enjoy lower electricity bills while contributing to environmental protection.

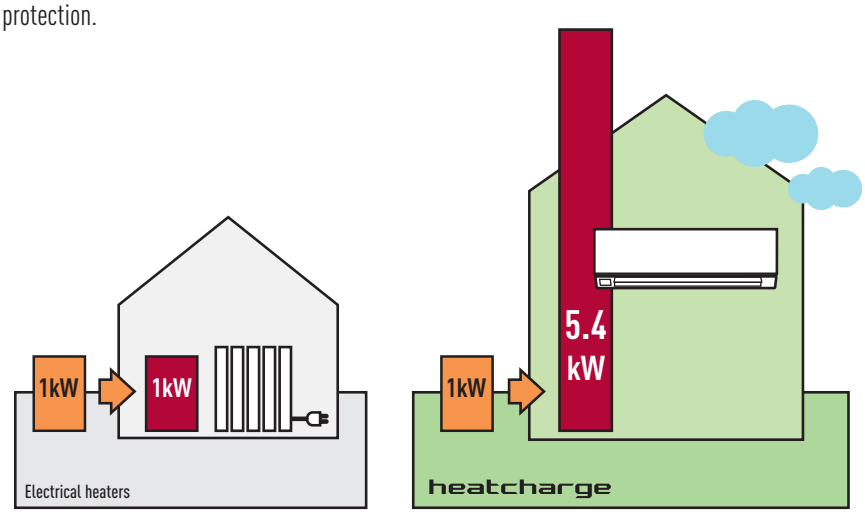

SCOP On heating mode, Heatcharge VE9 compared with electrical heaters at +7°C.

ETHEREA

4,80 A++
SCOP
SEASONAL COEFFICIENT OF PERFORMANCE

7,60 A++
SEER
SEASONAL ENERGY EFFICIENCY RATIO



New Etherea performance: the very best SEER and SCOP available

Seasonal Efficiency: New Energy Efficiency Label

From January 2013, the energy performance calculation for air conditioning systems changed from an overall EU based standard of EER and COP to a new standard based on seasonal efficiencies of SEER and SCOP. These changes to the Energy Related Products Directive or ErP are designed to give consumers a better understanding of the real efficiency of air conditioning and heat pump systems whose nominal power rating does not exceed 12kW.
Undergoing gradual implementation from 1 January 2013 until 1 January 2019, the schedule for each product category is as follows:
01 January 2013: A+++, A++, A+, A, B, C, D, E, F and G.
01 January 2015: A+++, A++, A+, A, B, C, D, E and F.
01 January 2017: A+++, A++, A+, A, B, C, D and E.
01 January 2019: A+++, A++, A+, A, B, C and D.

Seasonal Energy Efficiency Ratio (SEER) – This is the overall energy efficiency ratio of the unit, representative of the entire cooling season. It is calculated as the annual cooling demand divided by the annual consumption of electricity for cooling.
Seasonal Coefficient of Performance (SCOP) - This is the overall coefficient of performance of the unit, representative of the entire heating season designated (the value of SCOP corresponds to a determined heating season). It is calculated by dividing the reference annual heating demand by the annual consumption of electricity for heating.

SEER	
A+++	SEER ≥ 8.50
A++	6.10 ≤ SEER < 8.50
A+	5.60 ≤ SEER < 6.10
A	5.10 ≤ SEER < 5.60
B	4.60 ≤ SEER < 5.10
C	4.10 ≤ SEER < 4.60
D	3.60 ≤ SEER < 4.10
E	3.10 ≤ SEER < 3.60
F	2.60 ≤ SEER < 3.10
G	SEER < 2.60

SCOP	
A+++	SCOP ≥ 5.10
A++	4.60 ≤ SCOP < 5.10
A+	4.00 ≤ SCOP < 4.60
A	3.40 ≤ SCOP < 4.00
B	3.10 ≤ SCOP < 3.40
C	2.80 ≤ SCOP < 3.10
D	2.50 ≤ SCOP < 2.80
E	2.20 ≤ SCOP < 2.50
F	1.90 ≤ SCOP < 2.20
G	SCOP < 1.90

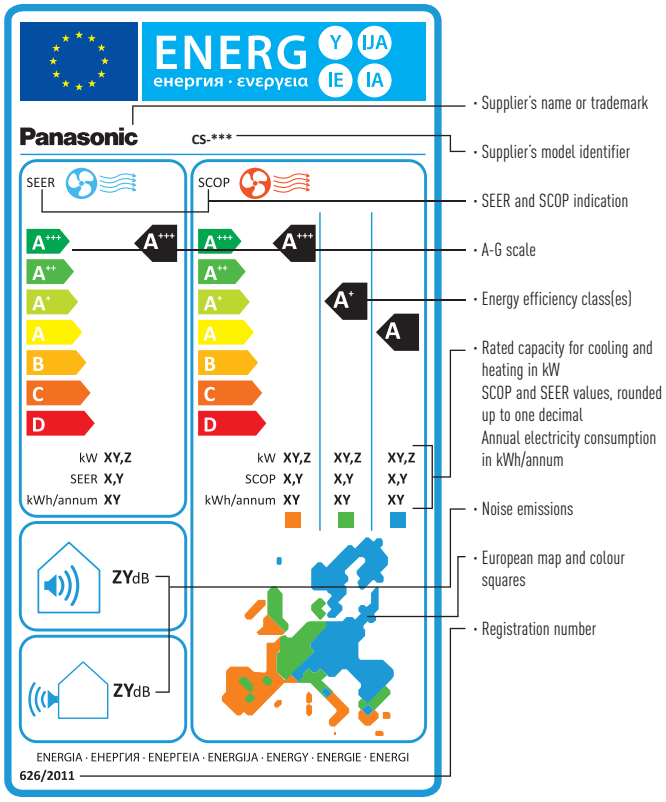





Why is the Panasonic R2 Rotary Compressor so efficient?

1. **High Efficiency Motor** The premium silicon steel motor meets industry efficiency requirements.
2. **Improved Lubrication of High Volume Oil Pump** The extended, high volume oil pump in conjunction with a larger capacity oil reservoir provides superior lubrication.
3. **Accumulator has Larger Refrigerant Capacity** The larger accumulator accomodates generous refrigerant amounts needed in longer line length installations.

New Panasonic R2 Rotary Compressor

Panasonic Rotary Compressors for Room Air Conditioners have been installed in the most demanding environments around the world. Designed to withstand extreme conditions, Panasonic Rotary delivers high performance, efficiency and reliable service, no matter where you are.

Panasonic, the world's largest manufacturer of rotary compressors.

Making the world a cooler place since 1978.



R2 Compressor Value

About R2 Compressor

Built upon 36 years of compressor design and production experience, R2 is the next generation of Rotary Compressors for residential central air conditioning. New technology improvements, enhanced materials and simple design ensure R2 compressors are reliable, efficient and quiet. The R2 Compressor delivers quality, comfort and peace of mind in homes around the world.

Panasonic's Rotary Compressors have been life tested in some of the world's most demanding environments. Proven for years many of the most demanding areas of the world, the R2 design is the compressor of choice by contractors and homeowners in these challenging climates. For the high performance that home-owners demand, R2 Rotary Compressors are the best air conditioning engines for today's residential cooling solutions.

Leading Technology

Used in over 80% of cooling solutions globally, rotary is the world's dominant residential air conditioning compression technology. Panasonic is the leading rotary and residential AC compressor manufacturer in the world, with over 200 million compressors produced.

Benefits

Central air conditioning delivered with a Panasonic R2 Rotary Compressor ensures a superior level of comfort at an economical cost.



Vane - Long Life

The special Physical Vapor Deposition (PVD) coating applied to the Vane greatly enhances the durability and life of the compressor mechanism.



Piston - Durable

The piston is made of unique high-grade steel that prevents wear and extends operation life.

R2 ROTARY INVERTER COMPRESSOR Panasonic

R2 Compressors:

- Higher efficiency
- Single and Dual Piston
- R-410A refrigerant
- Compact size

R2 rotary compressors utilize rolling piston technology.



The R2 compressor has been tested in extreme conditions.



FAQ

How does a Panasonic Rotary compressor work?

R2 compressors are rolling piston rotary compressors. The heart of the rotary compressor is the cylinder which houses the piston and the vane. The vane maintains constant contact with the piston as the piston rolls along the inside wall of the cylinder. As the piston rotates, gas is compressed into an increasingly smaller area until the discharge pressure is reached, releasing gas into the shell chamber. At the same time, more gas comes in through the suction port, enabling a continuous process of suction and discharge.

The simple design and symmetry of the cylinder components, combined with a special coating and premium materials, provide a highly durable and reliable product, rotation after rotation.

What SEER range does the Panasonic Rotary compressor support?

R2 compressors are found in air conditioning products featuring the very latest technology and offering the highest efficiency on the market today. Our R2 compressors are engineered specifically for this SEER efficiency requirement. Combined with the inherently simple design of the rotary, this results in a high desirable and impressively economical solution.

What makes Panasonic Rotary compressor so reliable?

Changes to the construction and material of internal components enables the R2 compressor to reliably operate with an above average maximum discharge pressure. A Physical Vapor Deposition (PVD) coating on the vane, along with enhanced steel materials, significantly reduces wear and increases durability.

What makes a Panasonic Rotary compressor so quiet?

The structure of the R2 compressor mechanism has been redesigned to increase stability and reduce vibration. Specifically, the compressor has an upper cylinder discharge, an enhanced fixed upper bearing, and reduced friction in the cylinder parts. The lower discharge and muffler in the dual piston compressors also enables lower noise levels. As a result, this new design optimises efficiency and minimises noise.

How do R2 rotary compressors compare to scroll and reciprocating compressors?

R2 rotary compressors are very similar to some scroll compressors in overall performance, including efficiency and reliability. The simple and symmetrical key components contribute to the R2 compressor's reliability, light weight, compact size, and economical applied cost, without sacrificing the key performance requirements of high efficiency and low noise levels.

Which refrigerants can be used with Panasonic Rotary compressor?

Panasonic has R2 Rotary Compressors available for R410A applications.



ENERGY SAVINGS

Econavi. Discover how to achieve energy savings

When you are relaxing while watching television, the air conditioner's operation usually runs at a constant temperature setting.

Econavi detects and reduces this waste in all the right ways

Using high-tech sensors and precise control programs, it analyses room conditions and adjusts cooling power accordingly.

Econavi is smart enough to locate and operate in all the right places to give you better energy savings.

Up to **38%** energy savings (cooling)



5 Features saving energy all at once

Econavi with intelligent eco sensors
Intelligent Sensors detect potential waste of energy using the Human Activity Sensor and Sunlight Sensor. It is able to monitor human location, movements, absence and sunlight intensity.
It then automatically adjusts cooling power to save energy efficiently with uninterrupted heating and cooling comfort and convenience.



Temperature Wave
Rhythmic temperature-controlled pattern to save energy without sacrificing comfort.



Area Search
Directs airflow to wherever you are in the room. Econavi detects changes in human movements and reduces the waste of cooling the unoccupied area of the room.



Activity Detection
Adapts cooling power to your daily activities. Econavi detects changes in activity levels and reduces the waste of cooling with unnecessary power.



Absence Detection
Reduces cooling power when you are not around. Econavi detects human absence in the room and reduces the waste of cooling an empty room.



Sunlight Detection
Adjusts cooling power to changes in sunlight intensity.

So Much Saved with So Little Effort

Up to 38% energy savings for Inverter cooling model with temperature wave

Comparison of 1.5HP Inverter model between Econavi with (Human Activity Sensor, Sunlight Sensor, and Temperature Wave) ON and Econavi OFF (Cooling)
Econavi ON, Outside temperature: 35°C/24°C
Remote setting temperature: 23°C with Fan Speed (High)
Vertical Airflow direction: Auto, Horizontal Airflow direction: Econavi Mode
Setting temperature goes up 2°C in total, 1°C controlled by Econavi activity level detection and another 1°C controlled by Econavi light intensity detection.
Temperature Wave is ON, electric heater (300 W; simulating the heat of human and TV etc)
Econavi OFF, Outside temperature: 35°C/24°C.
Remote setting temperature: 23°C with Fan Speed (High)
Vertical Airflow direction: Auto, Horizontal Airflow direction: Front
Total power consumption is measured for 2 hours under stable conditions.. At Panasonic Amenity Room (size: 16,6m^2).
This is the maximum energy savings value, and the effect differs according to conditions in installation and usage.

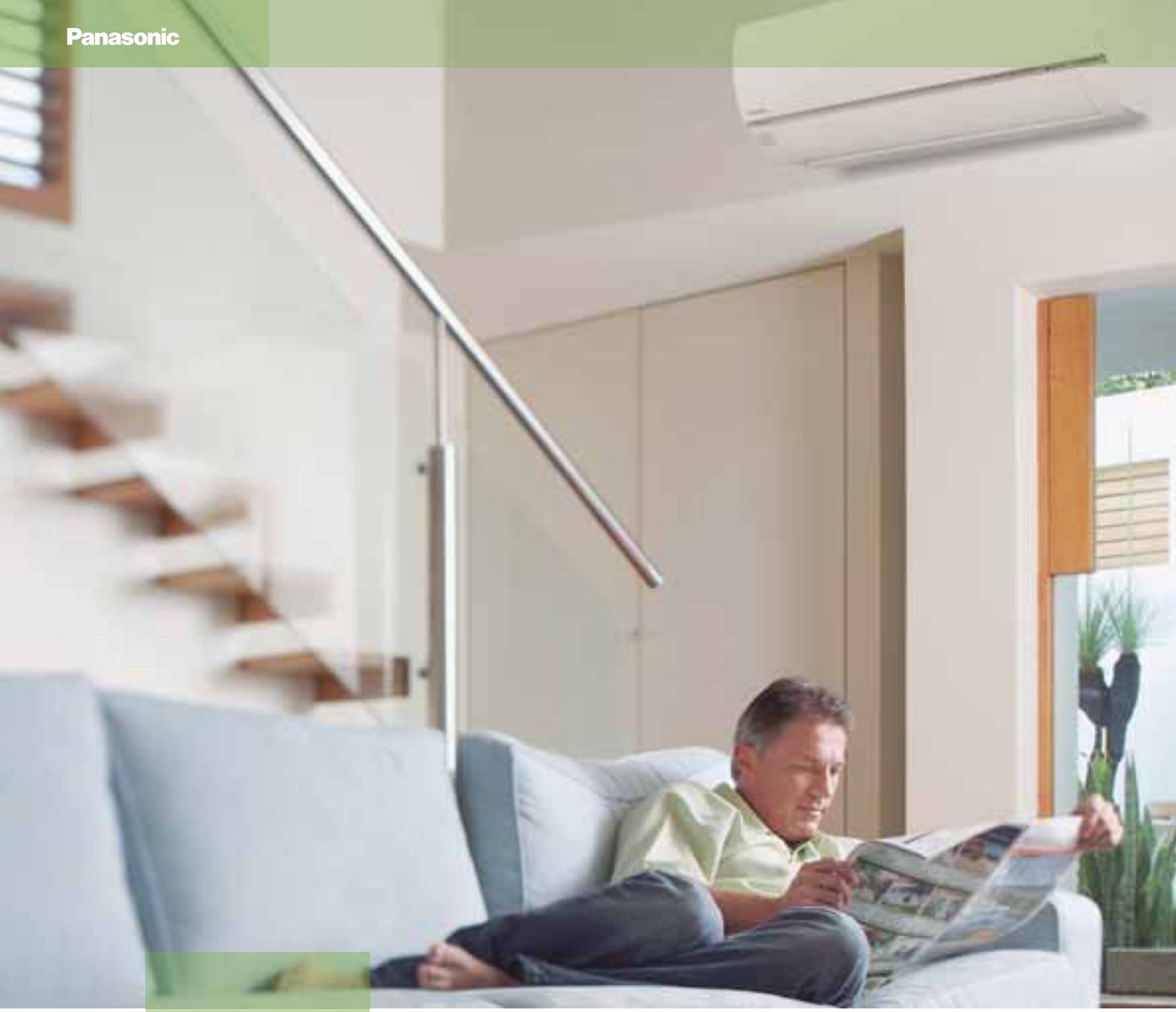



Temperature wave

Rhythmic temperature-controlled pattern to save energy without sacrificing comfort.

Econavi with Temperature Wave was developed based on an understanding of Thermal Physiology; the human body adapts physiologically to changes in temperature. Taking advantage of this understanding, Panasonic's R&D Centre has developed the Rhythmic Temperature Control pattern, which offsets the air conditioner's performance against thermal physiological responses.

Hence, when Econavi detects human presence and low activity level, Temperature Wave adapts to this rhythmic temperature control to realise further energy savings without sacrificing comfort.

How does temperature wave works?

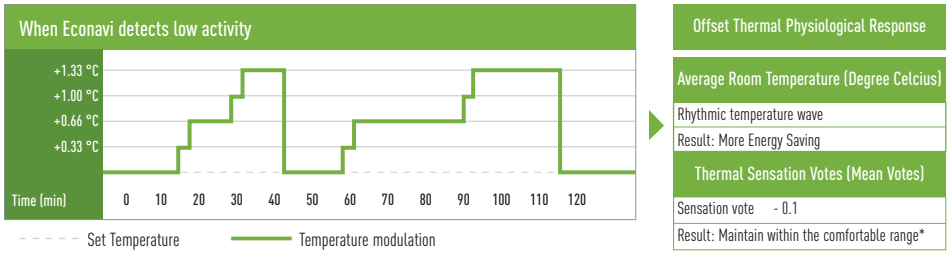

The result of the experiment showed that thermal sensation was maintained within the comfortable range* even though average set temperature was moderately increased. Hence, when ECONAVI detects human presence and low activity level, Temperature Wave adapts to this rhythmic temperature control to realise further energy saving without sacrificing comfort.

*The thermal condition of which PMV (Predicted Mean Value) is within -0.5 to +0.5 is recommended as comfortable condition (in the condition B) by International Standard EN ISO 7730.



Econavi sunlight sensor

Sunlight Detection (on Cooling Mode)

Econavi detects changes in sunlight intensity in the room and judges whether it is sunny or cloudy/night. It reduces waste energy by reducing cooling under less sunny conditions.
When weather changes from sunny to cloudy/night, Econavi detects less sunlight intensity and determines less cooling power is required. If cooling power remains the same, energy will be wasted. Econavi detects this waste and reduces cooling power by an amount equivalent to increasing the set temperature by 1°C.

Sunny

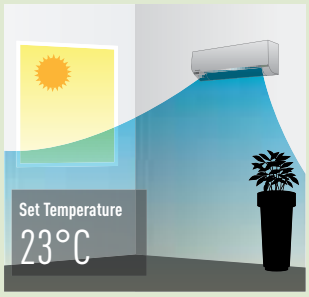

Econavi is switched on when it is sunny.

Detect

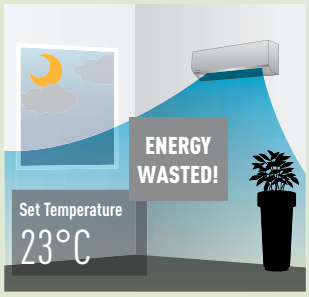

Econavi detects less cooling power is required.

Reduce waste

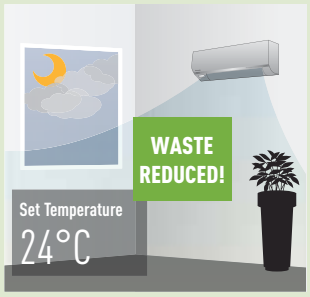

Reduces cooling power by an amount equivalent to increasing the set temperature by 1°C.

Sunlight Detection (on Heating Mode)

Econavi detects changes in sunlight intensity in the room and judges whether it is sunny or cloudy/night. It reduces heating operation (wasted energy) under more sunnier conditions.
When weather changes from cloudy/night to sunny, Econavi detects more sunlight intensity and determines less heating power is required. If heating power remains the same, energy will be wasted. Econavi detects this waste and reduces heating power by an amount equivalent to decreasing the set temperature by 1°C.

Cloudy/Night

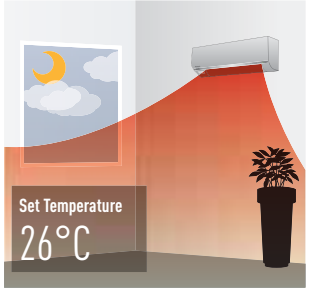

Econavi is switched on when it is cloudy/night.

Detect

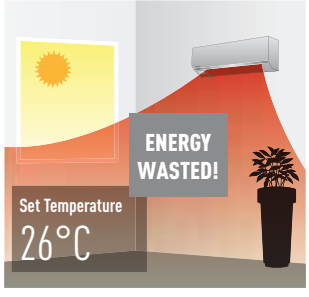

Econavi detects less heating power is required.

Reduce waste

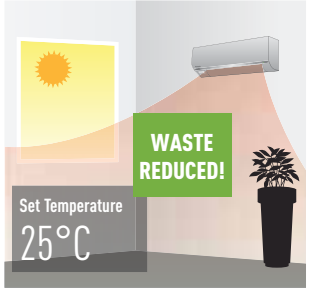

Reduces heating power by an amount equivalent to decreasing the set temperature by 1°C.



ECONAVI

Econavi intelligent sensors

Econavi Intelligent Sensors are able to monitor sunlight intensity, human movements, activity levels and human absence to detect unconscious waste of energy and automatically adjusts cooling power to save energy efficiently whilst still providing uninterrupted cooling comfort and convenience.



Sunlight Sensor
Detects changes in Sunlight Intensity

Human Activity Sensor
Detects human movements, changes in activity levels and human absence.

High-precision sensing

All objects emit infrared rays which, although invisible, can be detected as heat by Econavi's Human Activity Sensor if it is within the detection zone. When an object moves within its detection zone, Econavi compares the object's temperature with the room temperature to determine if it is human, and level of activity based on its movement.

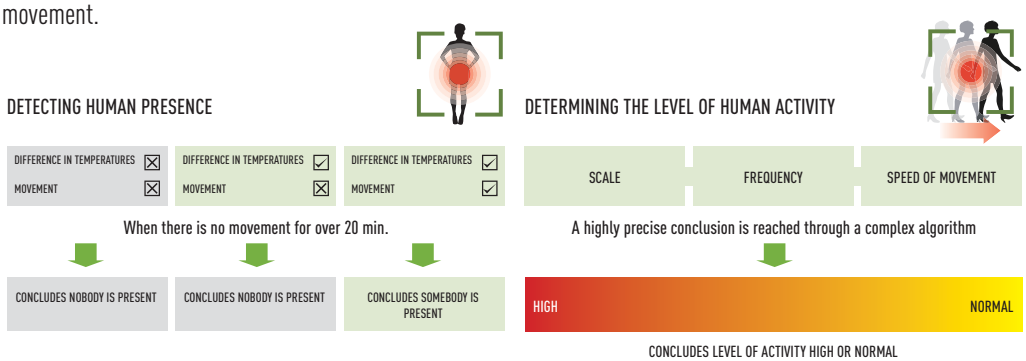

Differentiating objects

Econavi's sensor technology uses factors such as speed, frequency and temperature of every object to determine if it is human.

Electrical products



Difference in temperatures ☑
+
Movement ☒

CONCLUDES IT IS NOT HUMAN

A ROLLING BALL



Difference in temperatures ☒
+
Movement ☑

CONCLUDES IT IS NOT HUMAN

SMALL INSECTS



Difference in temperatures ☒
+
Movement ☑

CONCLUDES IT IS NOT HUMAN

Both changes may be detected, but they are too small to have any effect on the sensor.

PETS



Difference in temperatures ☑
+
Movement ☑

CONCLUDES IT IS NOT HUMAN

From the difference in temperatures and the nature of the object's movement, Econavi can determine if it's human*.

*The sensor may deem pets as humans, unless it moves within the detection zone at speeds that are not humanly possible.

Sensor detection principle

Human Activity Sensor detects human activity level and directs airflow to occupied or high activity zone.

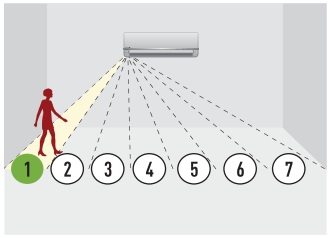

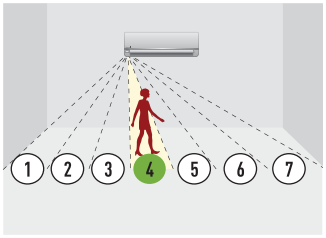

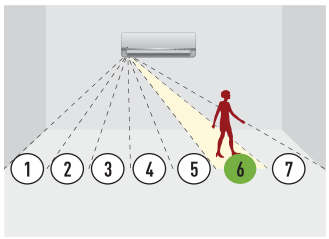

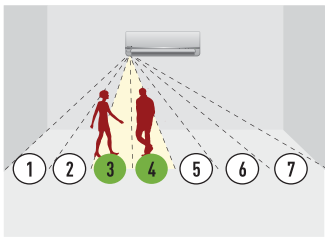

Coverage capabilities

Human Activity Sensor covers a wider area due to its improved area detection function. The entire room is divided into 7 detection areas.

Horizontal sensing area

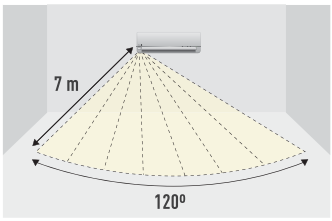

Vertical sensing area

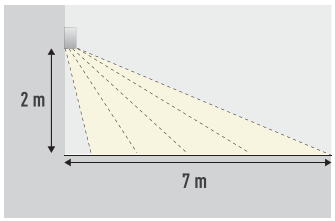

Improved comfort
AUTOCOMFORT

Autocomfort sensor provides comfort

Autocomfort sensor is used to provide comfort. High Activity Detection detects when the level of activity increases, and automatically increases cooling power by an amount equivalent to decreasing the set temperature by 1°C to improve comfort.

This is explained in the following scenario: High Activity Detection: Econavi High Activity Detection can detect changes in activity levels to adjust cooling power to improve comfort.

DETECT



Level of activity increased. Detects high activity.

IMPROVE COMFORT



Increases cooling power by an amount equivalent to decreasing the set temperature by 1°C.

nanoe-G

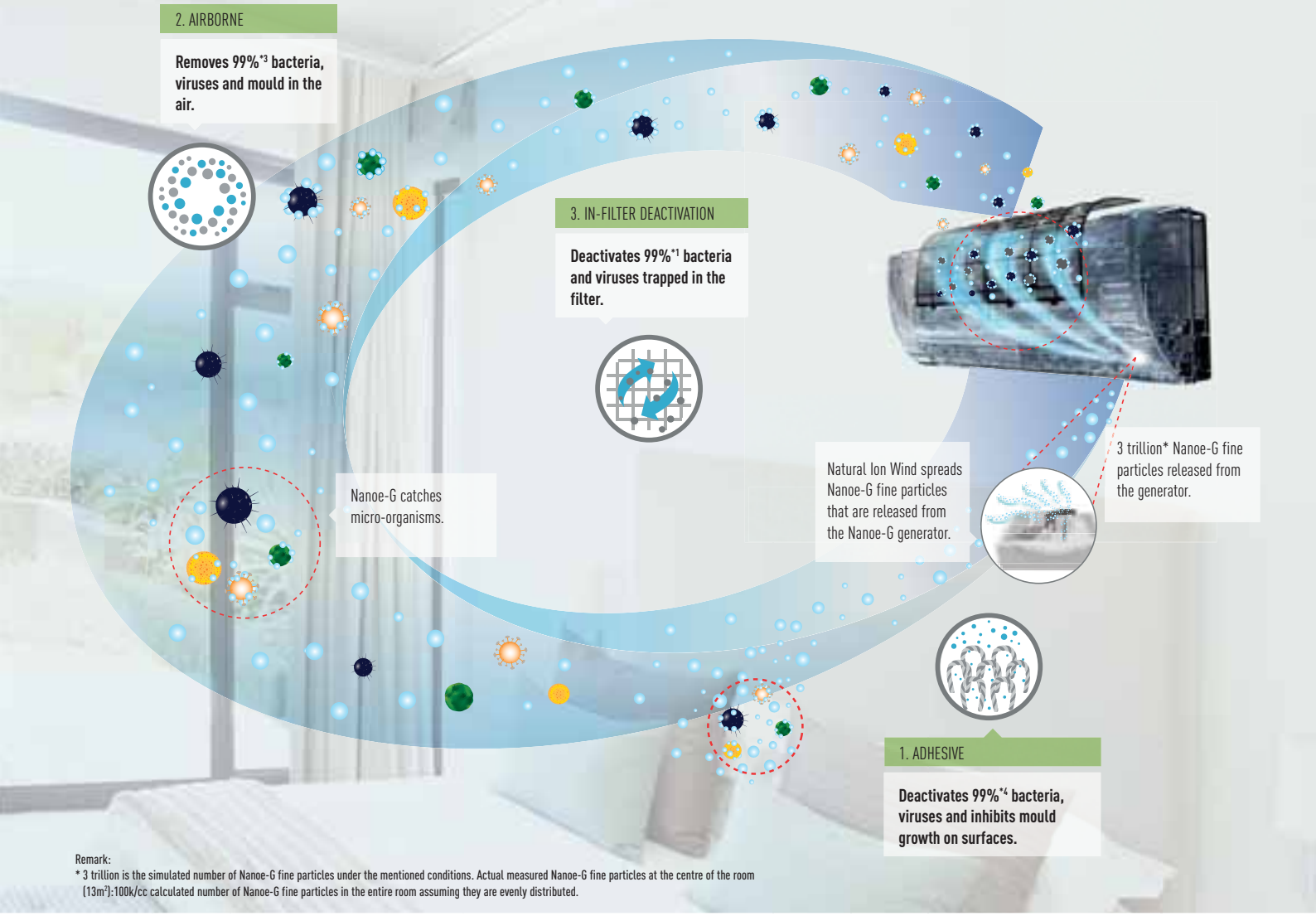

Remark:
* 3 trillion is the simulated number of Nanoe-G fine particles under the mentioned conditions. Actual measured Nanoe-G fine particles at the centre of the room (13m²):100k/cc calculated number of Nanoe-G fine particles in the entire room assuming they are evenly distributed.

Air purifier
99% removal
bacteria · virus · mold
nanoe-G

Nanoe-G. Purifies the air, surfaces and even inside itself

Now you can purify living spaces more effectively with Nanoe-G. Using nano-technology fine particles, harmful micro-organisms are removed from the air you breathe. But what about the ones found on furniture and other surfaces? Amazingly, they can also be deactivated by these particles. And now, when you switch off your air conditioner, Nanoe-G will even deactivate the micro-organisms in the filter. So you can enjoy complete peace-of-mind with a living environment that is fresher and cleaner.

Allergy UK SEAL OF APPROVAL

* Panasonic air conditioner CS-E/XE_PKE/QKE, CS-VE_NKE have Nanoe-G air purification system which removes 76.6% of airborne pollen allergen in 1 hour. This has been verified by a 3rd party institution and approved by "allergy UK".

Nanoe-G with In-filter Deactivation. Advanced air purification system for your home

Panasonic introduces an air purification system that captures harmful micro-organisms from the air, deactivates those trapped on surfaces and in the filter as well. It utilises nano-technology fine particles to purify the air and clean harmful micro-organisms attached onto fabrics in the room. And this year, it comes with a brand new feature that deactivates bacteria and viruses trapped in the filter. Thus, giving you the complete air purification system so you come home to a cleaner living environment.
Nanoe-G has been comprehensively tested in real-life chamber and demonstrated it is also effective against Allergy airborne particles. Due to this, Nanoe-G get the Seal of Approval of the British Allergy Foundation.

	1. Adhesive	2. Airborne	3. In-filter deactivation
Bacteria	99% Deactivation	99% Removal	99% Deactivation
Viruses	99% Deactivation	99% Removal	99% Deactivation
Mould	Growth Inhibition	99% Removal	–
Pollen Allergen	–	76,6% Removal in 1 hour	–

Airborne

Data on removal of airborne bacteria was presented by HARVARD SCHOOL of Public Health researchers at Nano-Symposium at Kyoto University, 2012

In a large space of 40 m³ / Removal effect has been evaluated.

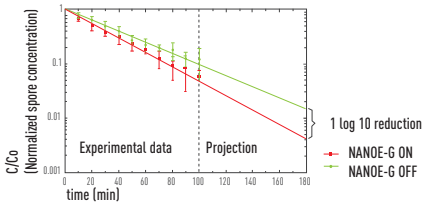

The effect after 100 minutes in a 40 m³ test space [about the size of a 10 tatami mat room], not the effect in a space where actually used.

¨Performance evaluation of a novel ionizer for air purification applications¨. Dr. S. Rudnick et al. Harvard School of Public Health, Environmental Health Nanoscience Lab. A study of the removal effect of airborne bacteria by using an air-conditioner incorporating nanoe-G was carried out in a large space, and the results were presented at Nano-Symposium jointly held in September 2012 by Harvard University and Kyoto University.

Test methods: Bacteria removal method: Release of nanoe-G ions. Target: Airborne bacteria, Test results: It is estimated that after three hours of operation the nanoe-G will achieve 2.7 log10 reductions, ~ 1 log10 reduction more, as compared to without nanoe-G.

How does our in-filter deactivation work?

1. Power "Off"	2. Fan Operation	3. Nanoe-G Operation	4. Deactivation Effect
			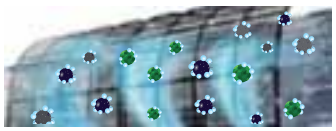
The air-conditioner first has to be turned off. **Remark: Main power must be switched on for the entire duration.**	The fan operation will run automatically for 30 minutes with the louvre slightly open to ensure the internal components are dry and free from condensation. **Remark: The 30-minute fan operation is only applicable when the unit has been operated in COOL /DRY mode.** Fan Operation: On Louvre: Low Louver Angle Nanoe-G LED: On	Natural Ion Wind spreads Nanoe-G particles that are released from the Nanoe-G generator. Fan Operation: Off Louvre: Closed Nanoe-G LED: On	Nanoe-G deactivates bacteria and viruses that are trapped in the filter within 2 hours. Fan Operation: Off Louvre: Closed Nanoe-G LED: On

Remark: Depending on the Air Conditioner's accumulated operation time, Nanoe-G In-Filter Deactivation may be activated only once a day.

The effectiveness of Nanoe-G

IN-FILTER DEACTIVATION

Target Substance	Substance Name	Effectiveness	Testing Institute	Test Report no	Method	Result
Bacteria	Bacteria Staphylococcus aureus (NBRC 12732)	99%	Japan Food Research Laboratories	Test Report No. 12037932001	The test piece impregnated with Staphylococcus aureus was placed on the filter of the Air Conditioner indoor unit, and then nanoe-G was operated. After the test piece was collected, viable cells were counted.	99% deactivated after 2-hour nanoe-G operation.
Virus	Escherichia coli phage (øX-174 ATCC 13706-B1)	99%	Japan Food Research Laboratories	Test Report No. 12014705001	The test piece impregnated with Escherichia coli phage was placed on the filter of the Air Conditioner indoor unit, and then nanoe-G was operated. After the test piece was collected, phage infectivity titer was determined.	99% deactivated after 2-hour nanoe-G operation.
	Influenza (H1N1) 2009 virus	Average 90% on filter (The percentage varies from 78.9% to 96.1% depending on its location)	Kitasato Research Center for Environmental Science	KRCES-Virus Test Report No. 24_0013	The test piece impregnated with Influenza (H1N1) 2009 virus was placed on the filter of the Air Conditioner indoor unit, and then nanoe-G was operated. After the test piece was collected, virus infectivity titer was determined.	Average 90% deactivation after 2-hour nanoe-G operation. (The percentage varies from 78.9% to 96.1%, depending on its location on filter)

Remark: All results are based on specific testing conditions. All tests are not demonstrated under actual usage situation. * test substance was placed on the 4 locations of the filter; upper/lower right and upper/lower left.
1) In-Filter Deactivation was certified by Japan Food Research Laboratories · Test Report number : 12037932001 Bacteria : Staphylococcus aureus (NBRC 12732) · Test Report number : 12014705001 Virus : Escherichia coli phage (-174 ATCC 13706-B1).
2) In-Filter Deactivation was certified by Kitasato Research Center for Environmental Science · Test Report number : KRCES-Virus Test Report No. 24_0013 Virus : Influenza (H1N1) 2009 Virus.

Testing institute: Kitasato research center for environmental science

AIRBORNE

Target Substance	Substance Name	Effectiveness	Test Report no	Method	Result
Bacteria	Staphylococcus aureus (NBRC 12732)	99%	KRCES-Bio. Test Report No. 23_0182	The AC with nanoe-G was operated in a test room (25m³) and aerosol was collected and bacterial count was calculated.	99% removal from the air after 150 minutes of operation.
Virus	Escherichia coli phage (øX-174 ATCC 13706-B1)	99%	KRCES-Env. Test Report No. 22_0008	The AC with nanoe-G was operated in a test room (25m³) and airborne phages were collected and phage count of the collected air was calculated.	99% removal from the air after 120 minutes of operation.
		99%	KRCES-Env. Test Report No. 22_0008	Nanoe-G was operated in a test chamber (200 Litre) and the phages were collected and phage count of the collected air was calculated.	99% removal from the air after 5 minutes of operation.
	Influenza (H1N1) 2009 virus	99%	KRCES-Env. Test Report No. 22_0008	nanoe-G was operated in a test chamber (200 Litre) and the influenza viruses were collected and the virus titers were calculated by the Reed and Muench method.	99% removal from the air after 5 minutes of operation.
	Penicillium pinophilum (NBRC 6345)	99%	KRCES-Bio. Test Report No. 23_0140	In view of health hazard associated with spatial distribution of Influenza (H1N1) 2009 virus, nanoe-G removal effectiveness cannot be tested in large test room (25m³). When tested in 200 Litre chamber, nanoe-G was able to decrease Influenza (H1N1) 2009 virus (99%) when it was operated for 5 minutes. Additionally when tested in larger test room (25m³), nanoe-G can remove 99.5% of Coli phage virus when operated for 120 minutes. It was validated that evaluation on the influenza virus could be speculated from the results on the phage according to the test results in a 200 Litre test chamber. It appeared that the air-conditioners in a larger test room (25m³) would be able to remove the influenza virus as effectively as the phage.	
Mould	Penicillium pinophilum (NBRC 6345)	99%	KRCES-Bio. Test Report No. 23_0140	The AC with nanoe-G was operated in a test room (25m3) and aerosol was collected and fungal spores count was calculated.	99% removal from the air after 90 minutes of operation.

Remark: All results are based on specific testing conditions. All tests are not demonstrated under actual usage situation.
3) Airborne Removal was certified by Kitasato Research Center for Environmental Science · KRCES-Bio. Test Report no.: 23_0182 Bacteria: Staphylococcus aureus (NBRC 12732)
· KRCES-Env. Test Report no.: 22_0008 Virus: Escherichia coli phage (øX-174 ATCC 13706-B1): Influenza (H1N1) 2009 virus · KRCES-Env. Test Report no.: 23_0140 Mould: Penicillium pinophilum (NBRC 6345).

Testing institute: Japan food research laboratories

ADHESIVE

Target Substance	Substance Name	Effectiveness	Test Report no	Method	Result
Bacteria	Staphylococcus aureus (NBRC12732)	99%	Test Report No. 11047933001-02	The AC with nanoe-G was operated in a test space (10m3) and viable cells were counted by pour plate method	99% deactivation after 24 hour operation of nanoe-G . (compared to the original condition/ ventilation mode)
Virus	Bacteriophage (Phi X 174 NBRC103405)	99%	Test Report No. 11073649001-02	Nanoe-G was operated in a test box (90 Litre) and phage infectivity titer was determined by plaque technique.	99% deactivation after 120 minutes operation of nanoe-G . (compared to non-operation)
Mould	Cladosporium cladosporioides (NBRC 6348)	Inhibit Mould Growth	Test Report No. 11047937001-02	Nanoe-G was operated in a test box (1m3) and colonies on the plate were counted.	The growth of the subject was inhibited. (>85% after 7 days)

All results are based on specific testing conditions. All tests are not demonstrated under actual usage situation.
4) Adhesive Deactivation was certified by Japan Food Research Laboratories · Test Report number: 11047933001-02 Bacteria: Staphylococcus aureus (NBRC 12732) · Test Report number: 11073649001-02 Virus: Bacteriophage (Phi X 174 NBRC 103405) · Test Report number: 11047937001-02 Mould : Cladosporium cladosporioides (NBRC 6348)

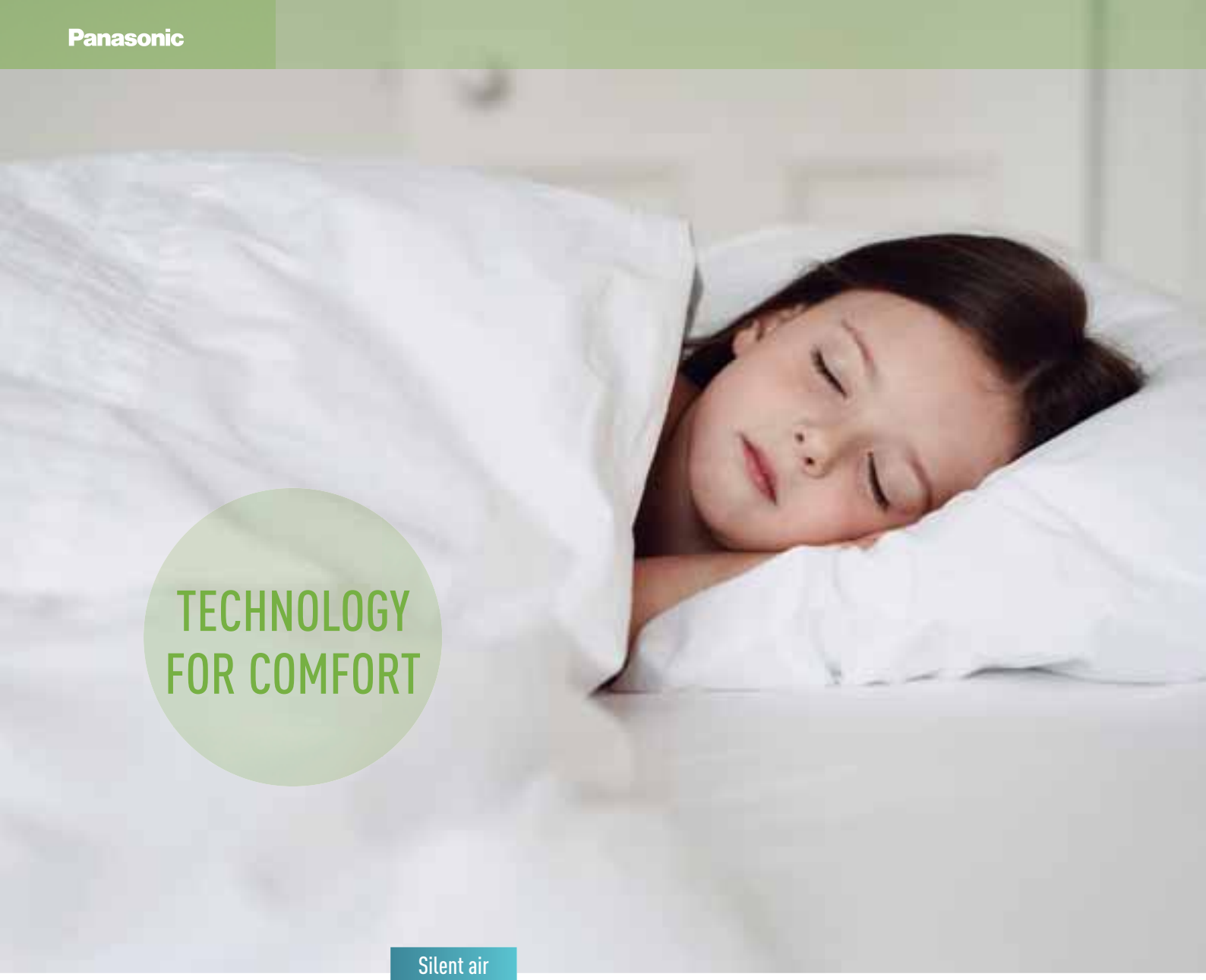

TECHNOLOGY FOR COMFORT

Silent air
20 dB
SUPER QUIET

Panasonic technology for comfort

Extremely quiet

We have succeeded in making one of the most silent air conditioners on the market. Panasonic Inverter air conditioner's indoor operating noise has been reduced by 3dB as the Inverter constantly varies its output power to enable more precise temperature control. In comparison, a non-Inverter air conditioner controls the temperature by switching on and off. Each time the air conditioner is switched on, it draws more energy to cool the room subsequently leading to more vibration and higher noise levels.

Perfect
humidity
control
MILD DRY

Mild Dry Cooling

Mild dry cooling maintains a higher level of relative humidity of up to 10% compared to regular cooling operation. This helps to reduce skin dryness - and a dry throat.

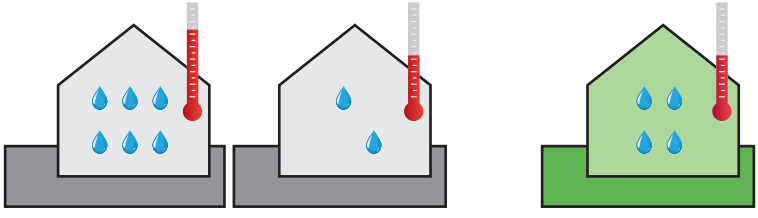

Lowers room temperature while maintaining high humidity.

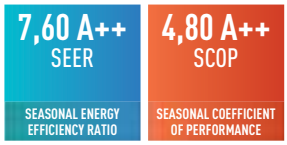

Inverter technology. The secret is flexibility

Panasonic Inverter air conditioners have the flexibility to vary the rotation speed of the compressor. This allows it to use less energy to maintain the set temperature while also being able to cool the room quicker at start up. So you can enjoy better savings on your electricity bills while maintaining cooling comfort

Exceptional energy-saving performance. Reduces electricity consumption

Panasonic Inverter air conditioners are designed to give you exceptional energy savings and performance. At the start up of an air conditioner's operation, a boost in power is required to reach the set temperature. After the set temperature is reached, less power is required to maintain it. The Panasonic Inverter air conditioner varies the rotation speed of the compressor. This provides a highly precise method of maintaining the set temperature.

Constant Comfort

Precise temperature control with a wide power output range enables an inverter air conditioner to meet different room occupancy levels – thus ensuring constant comfort.

Quick Comfort

Panasonic Inverter air conditioners can operate with higher power during the start up period to cool the room 1.5 times faster and heat the room 4 times faster than non-Inverter models.

Comparison of Cooling Speed

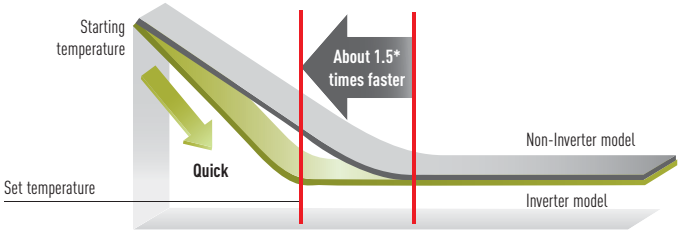

* 1.5HP Inverter vs. non-Inverter. Outside room temperature: 35˚C; setting temperature: 25˚C

Comparison of Heating Speed

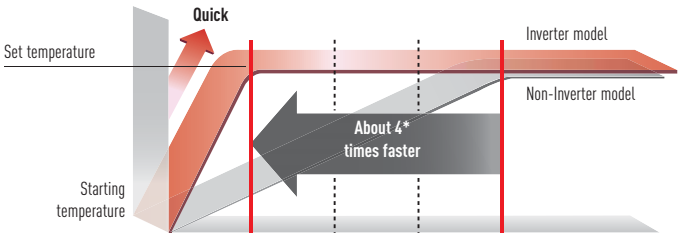

* Comparison of 1.0HP Inverter and Non-Inverter. Outside room temperature: 2˚C ; Setting temperature: 25˚C

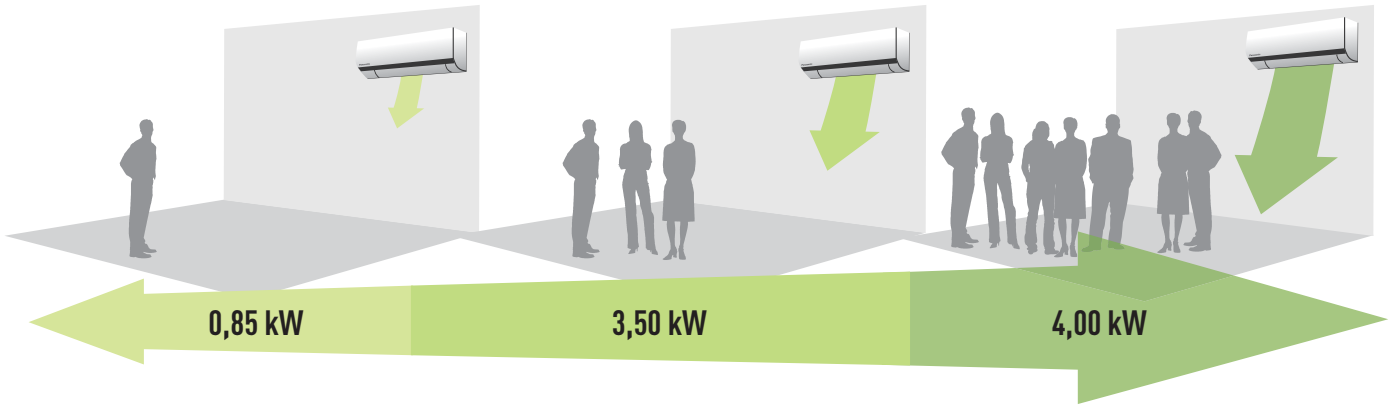

Minimum Power
Compressor rotation speed: SLOW
When not required, the unit operates at low power to save energy.

Medium Power
Normal Condition

Maximum Power
Compressor rotation speed: HIGH
When required, the unit operates at full power.

Graph shows the 1,5HP Inverter model's wide power output range during cooling./ Graph shows the 1,5HP Inverter model's wide power output range during cooling.

SEASONAL EFFICIENCY

SCOP A+++

heatcharge

INTELLIGENT MICROPROCESSOR



DC INVERTER

The new Heatcharge heating power and efficiency

- Energy Charge System. Heat storage unit which features Non-Stop heating and fast heating function
- Maximum efficiency and comfort with Econavi sunlight detection and human activity detection
- Nanoe-G air purifying system
- More powerful airflow to quickly reach the desired temperature

Panasonic's new full line-up of A+++ heat pumps

In response to the Kyoto Protocol, the European Union set some challenging targets for the reduction in greenhouse-gas emissions. By the year 2020, across the member states, the EU wants to have achieved the following objectives:

- a 20% cut in greenhouse gas emissions (from 1990 base levels)
- the share of renewables in the energy mix to increase by 20%
- an overall reduction of 20% in energy consumption.

Powerful, reliable heating even at low ambient winter temperatures

When the air conditioner is operating, the compressor, which is the power source of the unit, generates heat. Until now, this heat was released into the atmosphere. Panasonic focused on this waste heat!
Heatcharge is a unique, innovative Panasonic technology that stores this waste heat in the compressor and effectively uses it as heating energy. This lets you enjoy a new level of air conditioner heating power and efficiency.



Constant heating
HEATCHARGE

Constant heating

Using stored heat provides stable heating with less drop in temperature. Even when heating operation stops during defrost operation, stored heat continues to constantly warm the room. This eliminates the previous discomfort due to the temperature dropping when heating temporarily stops to ensure stable air conditioner heating.



You can check the charge level with the remote control Press the Information button and the level is displayed in five stages (from 0 to 4)

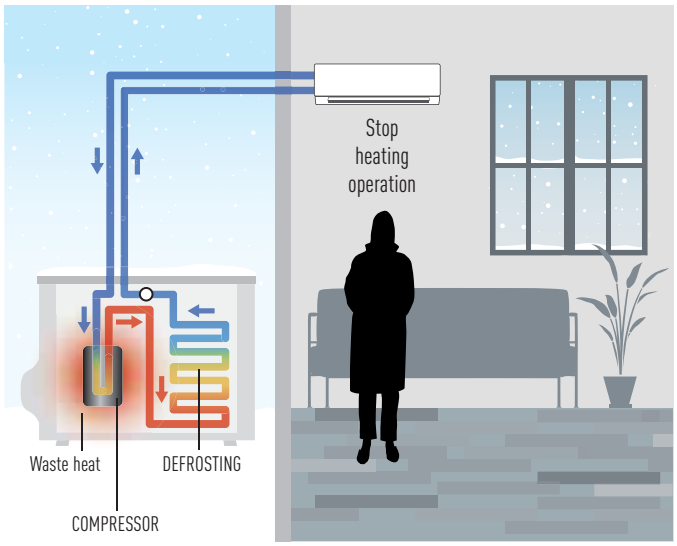

CONVENTIONAL: THE ROOM GRADUALLY BECOMES COLD
DEFROST OPERATION: About **11** to **15** min.
FALL IN ROOM TEMPERATURE: About **5** to **6** °C

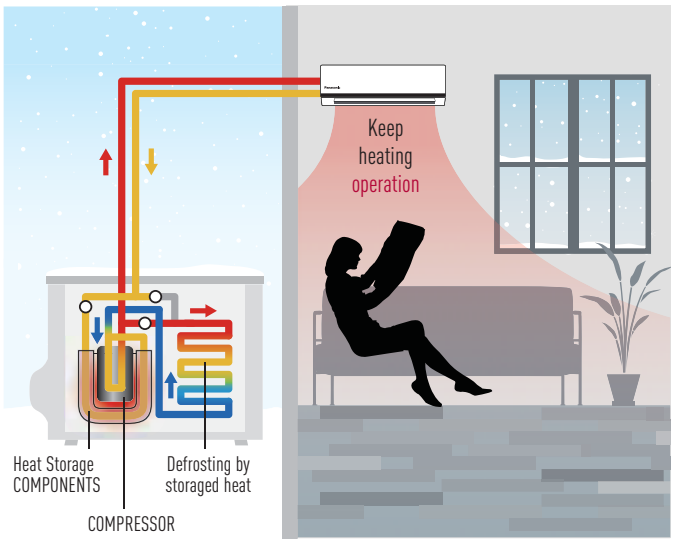

HEATCHARGE: THE ROOM IS THOROUGHLY WARMED
DEFROST OPERATION: About **5** to **6** min.
FALL IN ROOM TEMPERATURE: About **1** to **2** °C

* Defrost operation time and how low room temperature falls differ depending on the environment in which the unit is being used (how insulated and airtight and room is), operation conditions, and temperature conditions.
* Output air temperature falls during defrost operation. How low room temperature falls differs depending on the environment in which the unit is being used (how insulated and airtight and room is), operation conditions, and temperature conditions.
* In environments where a lot of frost accumulates, heating may stop during defrost operation.

Control your air conditioning from wherever you are. Control your comfort and efficiency with the lowest energy consumption

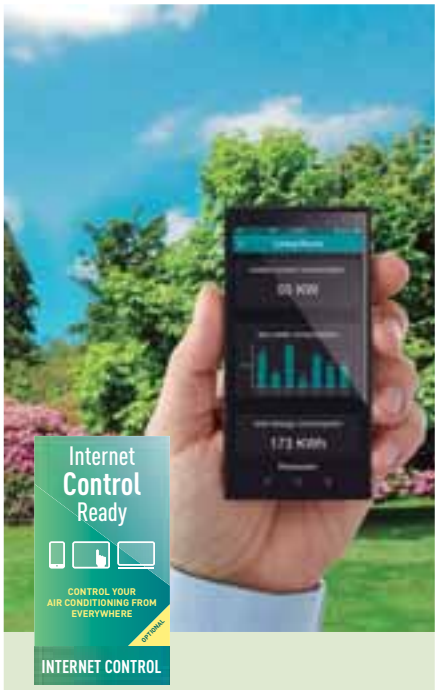

Reference: PA-AC-WIFI-1

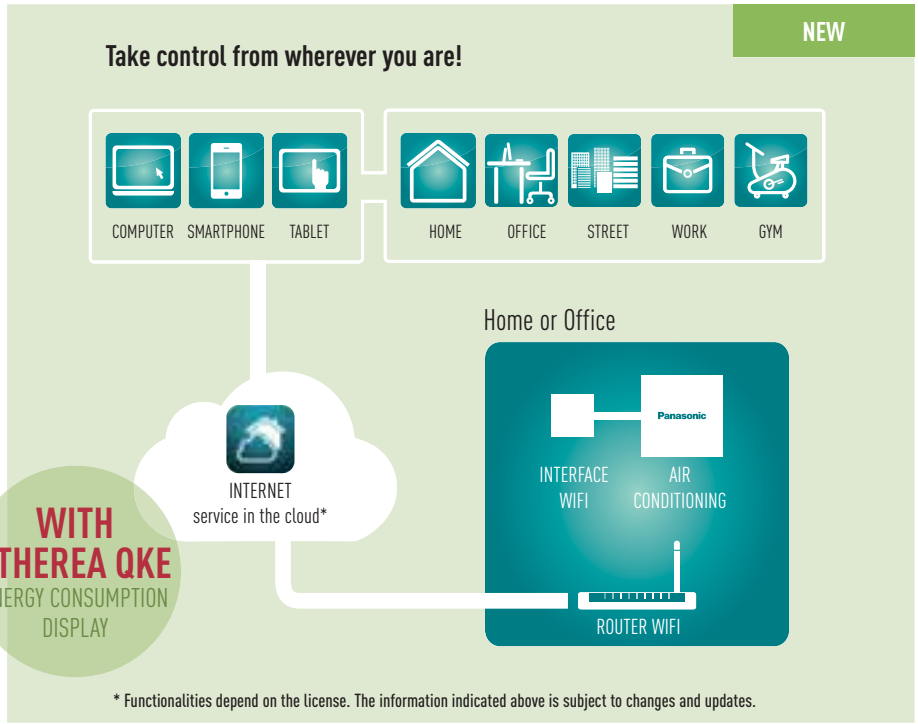

* Functionalities depend on the license. The information indicated above is subject to changes and updates.

What's Internet Control?

Internet Control is a next generation system providing user-friendly remote control of air conditioning or heat pump units, using a simple Android or iOS smartphone, tablet or PC via internet.

Simple Installation

Just connect the Internet Control device to the air conditioner or heat pump with the supplied wire and then link it to your WIFI Access point.

Internet Control. Easy to install. Maximum benefit

Internet Control is underlined with the slogan "Your home in the cloud", meaning a simple and easy to handle solution has been considered for every user to manage the device, not requiring any communication or computer skills.

No servers. No adaptors. No wires. Just a small box is needed to be connected and placed close to the air conditioning indoor unit... and your smartphone, tablet or PC.

Your existing WiFi connection does the rest when you are at home. Start the App from your smartphone device, your tablet or your computer, and enjoy a new experience in comfort. And if you are out of home, just launch the App, and manage the air conditioning of your home from the cloud. An intuitive and user-friendly application on the screen of your smartphone or PC that lets you manage the air conditioning unit in the same way you do with the remote controller at home.

Internet Control can be downloaded in Apple's AppStore and Android's PlayStore.

Control your air conditioning with the smart internet control device via smartphones, tablet, PC and smart desktop phone via internet

Offering the same functions as if you were at home or office: start/stop, Mode Operation, Set Temperature, Room Temperature etc as well as the new, advanced functionality provided by Internet Control to achieve the best comfort and efficiency with the lowest energy consumption.





Study Case. James, architect

"As an architect, I'm proud of my home. Unfortunately, the pace of my life revolves around airports on all five continents.

Because of this, whenever I get the chance to enjoy even just a few days at home, I programme my Panasonic Multi Split System to my tablet and from wherever I happen to be, I can enjoy the comforts that the system gives me from the minute I arrive home."

Connectivity: Great flexibility for integration into your IntesisHome, KNX, EnOcean, Modbus and BacNet projects allows fully bi-directional monitoring and control of all the functioning parameters



Easy
control
by BMS
CONNECTIVITY

The interface has been designed specifically for Panasonic and provides complete monitoring, control and full functionality of the Etherea, 4-Way 60x60 cassette and Low static pressure hide away line-up from IntesisHome, KNX, EnOcean, Modbus and BacNet installations.
This connectivity solution is made by a third party company, please contact Panasonic for more information.

Reference: PAW-AC-KNX-1i
This new KNX interface allows full bi-directional monitoring and control of all the functioning parameters of the air conditioner control from KNX installations. Small dimensions.
- Quick installation and possibility of hidden installation
- External power not required
- Direct connection to the AC indoor unit (split unit or Multi split unit)
- Fully KNX compatible. Control and monitoring, from sensors or gateways, of the internal variables of the indoor unit and error codes and indication
- Use the air conditioner ambient temperature or the one measured by a KNX temperature sensor or Thermostat
- AC unit can be controlled simultaneously by the remote control of the AC unit and by KNX devices
- Advanced control functions: use it as a room controller
- 4 binary inputs. They work as standard KNX binary inputs as well as being used to control the AC directly



Reference: PAW-AC-ENO-1i
This new EnOcean interface allows monitoring and control, fully bi-directionally, all the functioning parameters of the air conditioner control from EnOcean installations. Small dimensions.
- Quick installation and possibility of hidden installation
- External power not required
- Direct connection to the AC indoor unit (split unit)
- Fully EnOcean compatible. Control and monitoring, from sensors or gateways, of the internal variables of the indoor unit and error codes and indication
- Use the air conditioner ambient temperature or the one measured by an EnOcean temperature sensor or Thermostat
- AC unit can be controlled simultaneously by the remote control of the AC unit and by EnOcean devices
- Advanced control functions: use it as a room controller
- 4 binary inputs. They work as standard EnOcean binary inputs as well as being used to control the AC directly

Reference: PAW-AC-MBS-1
This new Modbus interface allows full bi-directional monitoring and control of all the functioning parameters of the air conditioner control from Modbus installations. Small dimensions.
- Quick installation and possibility of hidden installation
- External power not required
- Direct connection to the AC indoor unit (split unit or Multi split unit)
- Fully Modbus compatible. Control and monitoring, from sensors or gateways, of the internal variables of the indoor unit and error codes and indication
- Use the air conditioner ambient temperature or the one measured by a Modbus temperature sensor or Thermostat
- AC unit can be controlled simultaneously by the remote control of the AC unit and by Modbus devices
- Advanced control functions: use it as a room controller
- 4 binary inputs. They work as standard Modbus binary inputs as well as being used to control the AC directly

Dry contact
with additional
PCB:PAW-AC-DIO
SIMPLE CONNECTION

Reference: PAW-AC-DIO
Dry contact ON/OFF Interface.
Panasonic has developed for hotels applications a dry contact PCB which works with Etherea, RE, UE and YE indoor units in order to control simply the unit centrally.
- ON/OFF signal by 3rd party BMS
- PCB connected to CN-RMT port on Indoor Unit PCB

Model name	Interface	Model name	Interface
PA-AC-WIFI-1	Interface for IntesisHome for Etherea, Mini cassettes and mini concealed ducts models	PAW-AC-BAC-1	Interface for BacNet (Etherea, 4-Way 60x60 cassette and Low static pressure hide away)
PAW-AC-ENO-1i	Interface for En-ocean (Etherea, 4-Way 60x60 cassette and Low static pressure hide away)	PAW-AC-HEAT-1	Heating only PCB for Etherea, 4-Way 60x60 cassette and Low static pressure hide away
PAW-AC-KNX-1i	Interface for KNX (Etherea, 4-Way 60x60 cassette and Low static pressure hide away)	PAW-AC-DIO	PCB for wall mounted with dry contacts, On/Off, Error message (all QKE wall mounted)
PAW-AC-MBS-1	Interface for Modbus (Etherea, 4-Way 60x60 cassette and Low static pressure hide away)	PAW-SMSCONTROL	Control of the Etherea, Flagship and Heatcharge by SMS (need additional SIM card)



Possible
to use on
R22 pipings

R22 RENEWAL

R22 Renewal. An important drive to further reduce the potential damage to our ozone

It is often said that legislation is ruling our lives but sometimes it is there to help save lives. R22 phase out can be described as one of these and from Jan 1st 2010 the use of Virgin (new) R22 refrigerant was banned within the European Community.

- All Panasonic standard NKE, PKE and QKE units can be install on existing R22 pipings
- No need of additional accessories (only pipe reduces)
- Approximately 30% energy saving compare to R22 units

Panasonic are doing our part

We at Panasonic are also doing our part – recognising that all finances are under pressure at the moment. Panasonic has developed a clean and cost effective solution to enable this latest legislation to be introduced with as minimum an effect on businesses and cash reserves as possible.
The Panasonic renewal system allows good quality existing R22 pipe work to be re-used whilst installing new high efficiency R410A systems.
By bringing a simple solution to the problem Panasonic can renew all Split Systems and PACi systems; and depending upon certain restrictions we don't even limit the manufacturer's equipment we are replacing.
By installing a new high efficiency Panasonic R410A system you can benefit from around 30% running cost saving compared to the R22 system.

Yes...
1. Check the capacity of the system you wish to replace
2. Select from the Panasonic range the best system to replace it with
3. Follow the procedure detailed in the brochure and technical data

Simple...

R22 - The reduction of Chlorine critical for a cleaner future

Guidance on re-using of existing R22 piping for a new R410A installation

1. Precaution

The existing R22 piping can be re-used for a R410A system installation if the following conditions are met and the piping are finally verified to be:
- Dry (no moisture remained in the piping)
- Clean (no dust remained in the piping)
- Tight (no refrigerant leak at the joining and piping)

2. Conditions

- Recover the refrigerant and oil.
  Operate "force cooling" according to the recommended operation time, regardless of the piping length.
  Single split: 10min.
  Multi split: 30min.
  After that, carry out "pump down" to recover the refrigerant and oil from the existing R22 system

* Note: If pump down operation is not possible due to the malfunction of the system, flush and wash the existing piping to collect back the oil and dirt inside the system.

- Check the oil condition.
  If the oil contains dirt, wash the existing pipes
- Check the oil color.
  After pump down, use a cotton bud to wipe the oil from the existing pipe.
  If the oil color is higher than ASTM3, use a new pipe as re-use of old piping is not allowed

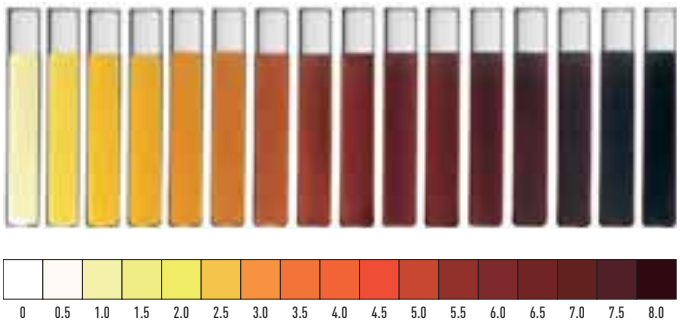

- Check pipe thickness.
  Make sure that the pipe thickness is more than 0,8mm.

If the thickness is less than 0,8mm, use a new pipe

- Rework the flare for R410A connection.
  Do not reuse the old flare nuts.

Make sure to use the new flare nuts attached to the R410a system

*Note: If the existing piping size is 1/4" (6.35mm) and 1/2" (12.7mm), and the new R410a system is 1/4" and 3/8" (9.52mm), use a pipe reducer connected at indoor and outdoor unit.

3. Applicable Model

Panasonic single split room air conditioner from CS/CU-RE/UE/YE/XE/CE/NE/E*NKE and PKE series onwards.
Panasonic multi split room air conditioner from CU-2E/3E/4E/5PBE series onwards.

Domestic Air Conditioner Range

1x1 and Multi Split Kits	2,2 kW	2,8 kW	3,2 kW	4,5 kW
Wall Mounted VE Inverter+ Energy Charge System		 KIT-VE9-NKE	 KIT-VE12-NKE	
Wall Mounted Etherea Inverter+ Silver NEW	 KIT-XE7-QKE	 KIT-XE9-QKE	 KIT-XE12-QKE	
Wall Mounted Etherea Inverter+ White NEW	 KIT-E7-QKE	 KIT-E9-QKE	 KIT-E12-QKE	 KIT-E15-QKE
Wall Mounted RE Type Standard Inverter NEW		 KIT-RE9-QKE	 KIT-RE12-QKE	 KIT-RE15-QKE
Floor Console Type Inverter+		 KIT-E9-PFE	 KIT-E12-PFE	
4-Way 60x60 Cassette Standard Inverter		 KIT-E9-PB4EA	 KIT-E12-PB4EA	
Low Static Pressure Hide Away Standard Inverter		 KIT-E9-PD3EA	 KIT-E12-PD3EA	
2x1 Wall Mounted MRE Standard Inverter				 KIT-2MRE77-PBE/PKE // KIT-2MRE79-PBE/PKE // KIT-2MRE712-PBE/PKE
Etherea Multi Split Inverter+ NEW				 KIT-2XE/E77-QBE // KIT-2XE/E79-QBE // KIT-2XE/E712-QBE // KIT-2XE/E99-QBE

Free Multi	3,2 to 5,6 kW	3,2 to 6,4 kW	4,5 to 9,0 kW	4,5 to 11,0 kW	4,5 to 13,6 kW	4,5 to 17,5 kW
						
Outdoor Unit //Inverter+	CU-2E15PBE (2 rooms)	CU-2E18PBE (2 rooms)	CU-3E18PBE (3 rooms)	CU-4E23PBE (4 rooms)	CU-4E27PBE (4 rooms)	CU-5E34PBE (5 rooms)

5,0 kW	6,0 kW	6,5 kW	8,0 kW	10,0 kW
 KIT-XE18-QKE				
 KIT-E18-QKE	 KIT-E21-QKE	 KIT-E24-QKE	 KIT-E28-QKE	
 KIT-RE18-QKE		 KIT-RE24-QKE		
 KIT-E18-PFE				
 KIT-2MRE99-PBE-PKE // KIT-2MRE912-PKE // KIT-2MRE1212-PKE				
 KIT-2XE/E99-QKE // KIT-2XE/E712-QKE // KIT-2XE/E912-QKE // KIT-2XEE/1212-QKE	 KIT-3XE/E7712-QBE // KIT-3E7715-QBE // KIT-3E557-QBE		 KIT-4E5557-QBE // KIT-4XE/E77712-QBE // KIT-4E77715-QBE // KIT-4XE/E7777-QKE // KIT-4XE/E77712-QKE // KIT-4E77715-QKE	 KIT-5XE77777-QBE // KIT-5E77777-QBE

Features Explained

Healthy Air Quality

Nanoe-G
Nanoe-G utilises nano-technology fine particles to purify the air in the room. It works effectively on airborne and adhesive micro-organisms such as bacteria, viruses and mould thus ensuring a cleaner living environment. Seal of Approval of the British Allergy Foundation

Mild Dry Cooling
Fine control helps prevent a rapid decrease in room humidity while maintaining the set temperature. Maintains an RH* up to 10% higher than cooling operation (*RH: Relative Humidity).
Ideal when sleeping with the air conditioner on.

Anti Bacterial Filter
The Anti Bacterial Filter eliminates the allergens it captures. It combines three functions in one (anti-allergen, anti-virus and anti-bacteria) to keep room air clean and healthy.

Antiallergy Properties
System is equipped with antiallergy properties filter.

One-Touch Anti-Mould Air Filter
Easily removed for washing.

Odour-removing function
Allows the exchanger to be cleaned, preventing possible odours. While this function is connected, the fan also remains off momentarily to avoid unpleasant odours while the exchanger is being cleaned.

Removable, washable panel
The front panel is easy to keep clean. It can be removed quickly in one single step and can be washed in water. A clean front panel ensures smoother, more efficient operation, which can save energy.

Comfort

Internet Control
Internet Control is a next generation system providing user-friendly remote control of air conditioning or heat pump units from everywhere, using a simple Android or iOS smartphone, tablet or PC via internet.

Inverter Plus System
Inverter plus products improve on the characteristics of standard Inverter air conditioners by over 20%. This means 20% less consumption and 20% off your electric bill. Inverter plus is also A class on cooling and heating mode.

Inverter system
The Inverter range provides greater efficiency, more comfort. Provides more precise temperature control, without highs and lows, and keeps the ambient temperature constant with lower energy consumption and a significant reduction in noise and vibration levels.

Econavi
The sensor determines the human activity level and the position in the room and adjust the air flow orientation for maximum comfort and maximum savings, and detects changes in sunlight intensity and judges whether it is sunny or cloudy/night. It reduces unnecessary heating under more sunlight conditions.

Econavi Sunlight Detection
Detects changes in sunlight intensity and judges whether it is sunny or cloudy/night. It reduces the heating and therefore wasted energy under more sunlight conditions.

Autocomfort
Detects conditions in the room and switches to energy saving operation when nobody is in the room. However, priority is given to comfort, so cooling power is increased when there's a lot of human activity.

Super Quiet
Thanks to its latest generation compressor and its twin blade fan, our outdoor unit is one of the most silent on the market. The indoor unit emits an almost imperceptible 20 dB.

Down to -10°C in cooling only mode
The air conditioner works in cooling only mode with an outdoor temperature of -10°C.

Down to -15°C in heating mode
The air conditioner works in heat pump mode with an outdoor temperature as low as -15°C.

Heatcharge
This innovative, newly developed technology charges heat and uses it for heating. Thanks to this system, you can enjoy incredibly powerful, comfortable air conditioner heating.

Summer House
This innovative function keeps the house at 7/8°C to avoid freezing pipes during the winter. This function is highly appreciated in summer house or week end houses.

Easy control by BMS
The communication port is integrated into the indoor unit and provides easy connection to, and control of, your Panasonic heat pump to your home or building management system.

Powerful Mode
The rapid and effective powerful mode is ideal for when you come home on the hottest or coldest days. It works at maximum power to reach the desired temperature in just 15 minutes.

Soft Dry Operation Mode
The soft dry mode eliminates excess moisture with a soft breeze and provides a sense of wellbeing without much change in temperature.

Wide & Long Airflow Vane
This vane has been designed so that the air goes further. It sends air to every corner of the room to keep the whole room in the comfort zone.

Personal Airflow Creation
Permits the air direction to be adjusted vertically and horizontally. This feature can be conveniently selected by remote control.

Automatic Vertical Airflow Control
The flap swings up and down automatically. The flow can also be set at a fixed angle with the remote control.

Manual Horizontal Airflow Control

Auto Mode (Inverter)
Automatically changes from cooling to heating depending on the set temperature for the room.

Simple Auto Changeover
When the difference between the measured temperature and the set temperature is 3°C or more, it automatically switches the current operation mode to heating or cooling mode necessary to keep the temperature at a constantly comfortable level.

Hot Start Mode
At the start of heating cycle and after defrost cycle, the indoor fan will start up once the indoor heat exchanger is warm.

Use

Real time clock with dual ON&OFF timer
This feature enables you to preset two different sets of start/stop operation timer (hour and minute) within a 24-hour time frame.

Real time clock with single ON&OFF timer
The exact operating time (hour and minute) can be set in advance. From here on, the unit will operate in accordance to these preset hours every day until the system is reset.

LCD Wireless Remote Controller

Reliability

Automatic Restart
This function permits automatic restarting if safe mode operation has stopped for some unusual reason, such as after a power cut. As soon as the power is back, the unit restarts with the parameters selected before it stopped.

Long Piping
Indicates the maximum length of pipe between the outdoor unit and the indoor unit(s). The distances permitted, demonstrate the installations possible.

Top-Panel Maintenance Access
Maintenance of an outdoor unit used to be quite a tedious task. Now, with the possibility of removing the top cover, maintenance is quick and easy.

Self-Diagnosis Function
With this function the unit carries out a process self-diagnosis when a particular function does not work correctly. This allows faster servicing.

R22 Renewal
The Panasonic renewal system allows good quality existing R22 pipe work to be re-used whilst installing new high efficiency R410A systems.

5 Years Warranty.
Panasonic guarantees the compressors in the entire range for five years.

Feature Comparison

		MODELS	WALL MOUNTED VE INVERTER+ ENERGY CHARGE SYSTEM	WALL MOUNTED ETHEREA INVERTER+ SILVER	WALL MOUNTED ETHEREA INVERTER+ WHITE	WALL MOUNTED RE TYPE STANDARD INVERTER	FLOOR CONSOLE TYPE INVERTER+	4-WAY 60x60 CASSETTE INVERTER	LOW STATIC PRESSURE HIDE AWAY INVERTER	2x1 WALL MOUNTED MRE TYPE STANDARD INVERTER	ETHEREA MULTI SPLIT 2x1 INVERTER+	ETHEREA MULTI SPLIT 3x1 INVERTER+	ETHEREA MULTI SPLIT 4x1 AND 5x1 INVERTER+
Healthy Air Quality	Air purifier 99% removal	Nanoe-G air purifying system	✔	✔	✔						✔	✔	✔
	Perfect humidity control	Mild Dry Cooling		✔	✔								
	Prevention allergen filter	Anti Bacterial Filter				✔		✔ Optional		✔			
		Antiallergy properties	✔ 3rd party tested	✔ 3rd party tested	✔ 3rd party tested	✔					✔ 3rd party tested	✔ 3rd party tested	✔ 3rd party tested
		One-Touch anti-mould air filter					✔	✔					
		Odour-removing function	✔	✔	✔	✔	✔	✔	✔	✔	✔	✔	✔
		Removable, washable panel	✔	✔	✔	✔	✔			✔	✔	✔	✔
Comfort	Internet Control Ready	Internet Control	✔	✔	✔						✔	✔	✔
	Energy saving	Inverter+ system	✔	✔	✔		✔				✔	✔	✔
	Energy saving	Inverter system				✔		✔	✔	✔			
	Up to 38% energy savings (cooling)	Econavi		✔	✔						✔	✔	✔
	Sunlight detection	Econavi Sunlight Detection	✔	✔	✔						✔	✔	✔
	Improved comfort	Autocomfort		✔	✔						✔	✔	✔
	Silent at 20 dB	Super Quiet	✔	✔ For XE7, XE9 and XE12	✔ For E7, E9 and E12	✔ For RE9-12* (22dB)							
	Down to -10°C in cooling mode	Down to -10°C in cooling only	✔	✔	✔			✔	✔		✔	✔	✔
	Down to -15°C in heating mode	Down to -15°C in heating mode	✔ -30°C	✔	✔	✔	✔	✔ -10°C	✔ -10°C	✔ -10°C	✔	✔	✔
	Constant heating	Heatcharge	✔										
	Prevent freezing	Summer House	✔										
	Easy control by BMS	Easy control by BMS	✔	✔	✔			✔	✔	✔	✔	✔	✔
		Powerful mode	✔	✔	✔		✔	✔	✔		✔	✔	✔
		Soft dry operation mode	✔	✔	✔	✔	✔	✔	✔	✔	✔	✔	✔
		Wide & long airflow vane	✔							✔			
		Personal airflow creation	✔	✔	✔	✔ For RE18 and RE24					✔	✔	✔
		Automatic vertical airflow control	✔			✔ For RE9, RE12 and RE15	✔	✔		✔			
		Manual horizontal airflow control	✔			✔ For RE9, RE12 and RE15	✔			✔			
		AUTO mode (Inverter)	✔	✔	✔	✔	✔	✔	✔	✔	✔	✔	✔
		Simple Auto Changeover	✔	✔	✔	✔							
		Hot start mode	✔	✔	✔	✔	✔	✔	✔	✔	✔	✔	✔
Use	24 DUAL	Real time clock with dual ON&OFF timer	✔	✔	✔						✔	✔	✔
	24	Real time clock with single ON&OFF timer				✔	✔	✔	✔	✔			
		LCD Wireless remote controller	✔	✔	✔	✔	✔	✔		✔	✔	✔	✔
Reliability		Automatic restart	✔	✔	✔	✔	✔	✔	✔	✔	✔	✔	✔
		Long piping	✔ 15 m	✔ 15 m (XE7-12) 20 m (XE18)	✔ 15 m (E7-15) 20 m (E18-21) 30 m (E24-28)	✔ 15 m (RE9-15) 20 m (RE18) 30 m (RE24)	✔ 15 m (E9-12) 20 m (E18)	✔ 20 m	✔ 20 m	✔ Max. 30 m	✔ Max. 30 m	✔ Max. 50 m	✔ 60 m (4E23) 70 m (4E27) 80 m (5E34)
		Top-Panel maintenance access	✔	✔	✔	✔	✔	✔	✔	✔	✔	✔	✔
		Self-diagnosis function	✔	✔	✔	✔	✔	✔	✔	✔	✔	✔	✔
	Possible to use on R22 pipings	R22 renewal	✔	✔	✔	✔	✔	✔	✔	✔	✔	✔	✔
	5 year compressor warranty	Warranty on the compressor	✔	✔	✔	✔	✔	✔	✔	✔	✔	✔	✔

* At the lowest fan speed.

WALL MOUNTED VE
INVERTER+
ENERGY CHARGE SYSTEM

The new Heatcharge from Panasonic has the capacity to store heat on the outdoor unit which allows heating to start quickly just after turning on the heat pump. It also ensures maximum comfort and heat in the house even during defrost operation as Heat charge also stores heat to prevent cool air during defrost.

ECONAVI builds-in a new Sunlight Detection technology to adjust output ideally thereby giving you the best comfort at anytime whilst saving energy.
Furthermore, the Nanoe-G revolutionary air-purifying system utilises nano technology fine particles to remove and deactivate 99% of both airborne and adhesive micro-organisms like bacteria, viruses and mould.



INTERNET CONTROL READY: Optional. SEER and SCOP: For KIT-VE9-NKE.

Kit			KIT-VE9-NKE	KIT-VE12-NKE
Indoor			**CS-VE9NKE**	**CS-VE12NKE**
Outdoor			**CU-VE9NKE**	**CU-VE12NKE**
Cooling capacity	Nominal (Min - Max)	kW	2,50 (0,60 - 3,00)	3,50 (0,60 - 4,00)
SEER	**Nominal**	**Energy Saving**	**8,60** A+++	**8,50** A+++
Pdesign (cooling)			2,5	3,5
Power input cooling	Nominal (Min - Max)	kW	0,480 (0,140 - 0,790)	0,880 (0,140 - 1,100)
Annual electricity consumption (cooling) [1]		kWh/a	102	145
Heating capacity	Nominal (Min - Max)	kW	3,20 (0,60 - 7,70)	4,20 (0,60 - 8,40)
Heating capacity at -7 °C	Nominal	kW	3,2	5,60
SCOP	**Nominal**	**Energy Saving**	**5,40** A+++	**5,10** A+++
Pdesign at -10°C		kW	3,2	4,2
Power input heating	Nominal (Min - Max)	kW	0,580 (0,140 - 2,720)	0,850 (0,140 - 3,160)
Annual electricity consumption (heating) [1]		kWh/a	830	1153
Indoor Unit				
Power source		V	230	230
Recommended fuse		A	16	16
Recommended power cable section		mm^2	1,5	1,5
Connection		mm^2	4 x 1,5	4 x 1,5
Current (Nominal)	Cooling / Heating	A	2,2 / 2,7	3,9 / 3,8
Maximum current		A	14,0	15,0
Air volume	Cooling / Heating	m^3/h	600 / 600	654 / 618
Moisture removal volume		l/h	1,5	2,0
Sound pressure level [2]	Cooling (Hi / Lo / Q-Lo)	dB(A)	44 / 26 / 23	45 / 29 / 26
	Heating (Hi / Lo / Q-Lo)	dB(A)	44 / 27 / 24	45 / 33 / 30
Sound power level	Cooling / Heating (Hi)	dB	59 / 59	60 / 60
Dimensions	H x W x D	mm	295 x 890 x 275	295 x 890 x 275
Net weight		kg	14,5	14,5
Air purifier filter			Nanoe-G	Nanoe-G
Outdoor Unit				
Air volume	Cooling / Heating	m^3/h	1.980 / 1.890	2.052 / 1.890
Sound pressure level [2]	Cooling (Hi)	dB(A)	49	50
	Heating (Hi)	dB(A)	49	50
Sound power level	Cooling / Heating (Hi)	dB	64 / 64	65 / 65
Dimensions [3]	H x W x D	mm	623 x 799 x 299	623 x 799 x 299
Net weight		kg	43	43
Piping connections	Liquid pipe	inch (mm)	1/4 (6,35)	1/4 (6,35)
	Gas pipe	inch (mm)	3/8 (9,52)	3/8 (9,52)
Refrigerant loading	R410A	kg	1,50	1,50
Elevation difference (in/out)	Max	m	12	12
Piping length	Min / Max	m	3 / 15	3 / 15
Precharge length	Max	m	7,5	7,5
Additional charge		g/m	20	20
Operating range	Cooling Min / Max	°C	-10 / +43	-10 / +43
	Heating Min / Max	°C	-30 [4] / +24	-30 [4] / +24

Rating Conditions: Cooling Indoor 27 °C DB / 19 °C WB. Cooling Outdoor 35 °C DB / 24 °C WB. Heating Indoor 20 °C DB. Heating Outdoor 7 °C DB / 6 °C WB. (DB: Dry Bulb; WB: Wet Bulb)

1) The annual energy consumption is calculated in accordance with the ErP directive. 2) The Sound pressure level of the units shows the value measured of a position 1 meter in front of the main body and 0,8 m below the unit. The sound pressure is measured in accordance with Eurovent 6/C/006-97 specification. 3) Add 70 mm for piping port. 4) Operation possible on heating mode up to -30 °C tested by SP. Performance guaranteed on heating mode up to -20 °C.
Specifications subject to change without notice.
* Preliminary data.
For detailed information about ErP, please visit our page http://www.ptc.panasonic.eu





INCLUDED WITH THE INDOOR UNIT

SEASONAL EFFICIENCY

SCOP A+++

KIT-VE9-NKE // KIT-VE12-NKE

Technical focus

- **New!** This units can be installed on R22 pipings
- Work up to -30°C
- Energy Charge System. Heat storage unit which realizes NON-STOP heating and fast heating function
- Maximum efficiency and comfort with Econavi sunlight detection
- Nanoe-G air purifying system, 99% effective on both airborne and adhesive mould, viruses and bacteria
- Super Quiet! Only 23 dB, equivalent to night-time in the country
- More powerful airflow to quickly reach the desired temperature

NEW AIR FLOW DISCHARGE IDEAL AIR FLOW FOR HEATING AND FOR COOLING





CU-VE9NKE
CU-VE12NKE

Features

HEALTHY AIR
- Nanoe-G air purifying system

ENERGY EFFICIENCY AND ECOLOGY
- Maximum efficiency Inverter system, for bigger savings
- Econavi Sunlight Detection
- R410A refrigerant gas

COMFORT
- Super Quiet
- Super Powerful heating mode
- Uniform dispersion of airflow
- Automatic vertical airflow control
- Hot start mode, increased comfort on heat pump mode, no cool airflow when process starts
- Automatic restart after power cut

EASE OF USE
- Real time clock with dual ON&OFF timer
- User friendly infrared remote control
- Connectivity function (indoor unit equipped with PCB port which can be connected to outside network)

EASY INSTALLATION AND MAINTENANCE
- Removable, washable panel
- 15 m maximum connection distance
- 12 m maximum elevation difference
- Maintenance access through the top panel of the outdoor unit
- Self-diagnosis function

WALL MOUNTED ETHEREA
INVERTER+
SILVER PLATED / WHITE

Etherea with enhanced Econavi sensor and new Nanoe-G air-purifying system: outstanding efficiency, comfort and healthy air combined with state-of-the-art design.

Econavi features an in-built human activity sensor and a new sunlight detection technology to adjust output thereby giving you the best comfort at anytime whilst saving energy. Econavi not only optimizes air flow orientation and volume according to human presence, it also reduces cooling power automatically by no/less sunshine. With Econavi, energy savings of up to 38% are possible, whilst increasing your comfort. Furthermore, the Nanoe-G revolutionary air-purifying system utilises nano technology fine particles to remove and deactivate 99% of both airborne and adhesive micro-organisms like bacteria, viruses and mould.

product design award 2013

Awarded with the prestigious IF Design Award 2013

Internet Control Ready – INTERNET CONTROL

Energy saving – INVERTER+

7,60 A++ SEER – SEASONAL ENERGY EFFICIENCY RATIO

4,80 A++ SCOP – SEASONAL COEFFICIENT OF PERFORMANCE

Air purifier 99% removal bacteria · virus · mold – nanoe-G

Up to 38% energy savings (cooling) – ECONAVI

Improved comfort – AUTOCOMFORT

Perfect humidity control – MILD DRY

Silent air 20 dB – SUPER QUIET

Easy control by BMS – CONNECTIVITY

Possible to use on R22 pipings – R22 RENEWAL

5 year compressor warranty

INTERNET CONTROL READY: Optional. SEER and SCOP: For KIT-XE12-QKE and KIT-E12-QKE. MILD DRY: Maintains a Relative Humidity up to 10% higher than cooling operation. Ideal when sleeping with the air conditioner on. SUPER QUIET: For XE7, XE9, XE12, E7, E9 and XE12.

Kit Silver Plated			**KIT-XE7-QKE**	**KIT-XE9-QKE**	**KIT-XE12-QKE**	**—**
Kit Silver Plated / with Smartphone Control			**KIT-XE7-QKE-WIFI**	**KIT-XE9-QKE-WIFI**	**KIT-XE12-QKE-WIFI**	**—**
Kit White			**KIT-E7-QKE**	**KIT-E9-QKE**	**KIT-E12-QKE**	**KIT-E15-QKE**
Kit White / with Smartphone Control			**KIT-E7-QKE-WIFI**	**KIT-E9-QKE-WIFI**	**KIT-E12-QKE-WIFI**	**KIT-E15-QKE-WIFI**
Indoor Silver plated			**CS-XE7QKEW**	**CS-XE9QKEW**	**CS-XE12QKEW**	**—**
Indoor White			**CS-E7QKEW**	**CS-E9QKEW**	**CS-E12QKEW**	**CS-E15QKEW**
Outdoor			**CU-E7QKE**	**CU-E9QKE**	**CU-E12QKE**	**CU-E15QKE**
Cooling capacity	Nominal (Min - Max)	kW	2,05 (0,75 - 2,40)	2,50 (0,85 - 3,00)	3,50 (0,85 - 4,00)	4,20 (0,85 - 5,00)
	Nominal (Min - Max)	kCal/h	1.760 (650 - 2.060)	2.150 (730 - 2.580)	3.010 (730 - 3.440)	3.610 (730 - 4.300)
SEER	**Nominal**	**Energy Saving**	**6,90** A++	**6,90** A++	**7,60** A++	**6,60** A++
Pdesign (cooling)		kW	2,1	2,5	3,5	4,2
Power input cooling	Nominal (Min - Max)	kW	0,460 (0,240 - 0,565)	0,525 (0,245 - 0,715)	0,835 (0,250 - 1,050)	1,240 (0,260 - 1,540)
Annual electricity consumption (cooling) [1]		kWh/a	107	127	161	223
Heating capacity	Nominal (Min - Max)	kW	2,80 (0,70 - 4,00)	3,40 (0,80 - 5,00)	4,00 (0,80 - 6,00)	5,30 (0,80 - 6,80)
Heating capacity at -7°C	Nominal	kW	2,38	2,95	3,45	4,11
SCOP	**Nominal**	**Energy Saving**	**4,40** A+	**4,70** A++	**4,80** A++	**4,00** A+
Pdesign at -10°C		kW	2,1	2,7	3,2	3,6
Power input heating	Nominal (Min - Max)	kW	0,625 (0,180 - 1,000)	0,720 (0,190 - 1,270)	0,840 (0,190 - 1,600)	1,420 (0,190 - 1,920)
Annual electricity consumption (heating) [1]		kWh/a	668	804	933	1.260
Indoor Unit						
Power source		V	230	230	230	230
Recommended fuse		A	16	16	16	16
Recommended power cable section		mm²	1,5	1,5	1,5	1,5
Connection indoor / outdoor		mm²	4 x 1,5	4 x 1,5	4 x 1,5	4 x 1,5
Current (Nominal)	Cooling / Heating	A	2,20 / 2,80	2.35 / 3,20	3,80 / 3,90	5,50 / 6,30
Maximum current		A	4,40	5,6	7,40	8,5
Air volume	Cooling / Heating	m³/h	726 / 738	768 / 774	804 / 822	852 / 876
Moisture removal volume		l/h	1,3	1,5	2	2,4
Sound pressure level [2]	Cooling (Hi / Lo / Q-Lo)	dB(A)	37 / 24 / 20	39 / 25 / 20	42 / 28 / 20	43 / 31 / 25
	Heating (Hi / Lo / Q-Lo)	dB(A)	38 / 25 / 20	40 / 27 / 20	42 / 33 / 20	43 / 35 / 29
Sound power level	Cooling / Heating (Hi)	dB	53 / 54	55 / 56	58 / 58	59 / 59
Dimensions	H x W x D	mm	295 x 870 x 255	295 x 870 x 255	295 x 870 x 255	295 x 870 x 255
Net weight		kg	10	10	10	10
Air purifier filter			Nanoe-G	Nanoe-G	Nanoe-G	Nanoe-G
Outdoor Unit						
Air volume	Cooling / Heating	m³/h	2.034 / 2.034	1.788 / 1.788	2.106 / 2.160	1.998 / 1.998
Sound pressure level [2]	Cooling / Heating (Hi)	dB(A)	45 / 46	46 / 47	48 / 50	49 / 51
Sound power level	Cooling / Heating (Hi)	dB	60 / 61	61 / 62	63 / 65	64 / 66
Dimensions [3]	H x W x D	mm	542 x 780 x 289	542 x 780 x 289	619 x 824 x 299	619 x 824 x 299
Net weight		kg	31	33	35	33
Piping connections	Liquid pipe / Gas pipe	inch (mm)	1/4 (6,35) / 3/8 (9,52)	1/4 (6,35) / 3/8 (9,52)	1/4 (6,35) / 3/8 (9,52)	1/4 (6,35) / 1/2 (12,70)
Refrigerant loading	R410A (GWP value)	kg	0,85	1,02	1,15	1,02
Elevation difference (in/out) [4]	Max	m	15	15	15	15
Piping length	Min / Max	m	3 / 15	3 / 15	3 / 15	3 / 15
Precharge length	Max	m	7,5	7,5	7,5	7,5
Additional charge		g/m	20	20	20	20
Operating range	Cooling Min / Max	°C	-10 / +43	-10 / +43	-10 / +43	-10 / +43
	Heating Min / Max	°C	-15 / +24	-15 / +24	-15 / +24	-15 / +24

Rating Conditions: Cooling Indoor 27°C DB / 19°C WB. Cooling Outdoor 35°C DB / 24°C WB. Heating Indoor 20°C DB. Heating Outdoor 7°C DB / 6°C WB. (DB: Dry Bulb; WB: Wet Bulb)
Connectivity restriction: JKE units are not compatible with QKE units.

1) The annual energy consumption is calculated in accordance with the ErP directive. 2) The Sound pressure level of the units shows the value measured of a position 1 metre in front of the main body and 0,8 m below the unit. The sound pressure is measured in accordance with Eurovent 6/C/006-97 specification. Q-Lo: Quiet mode. Lo: The lowest fan speed. 3) Add 70 mm for piping port. 4) When installing the outdoor unit at a higher position than the indoor unit.
Specifications subject to change without notice.
For detailed information about ErP, please visit our page http://www.ptc.panasonic.eu



CS-E7QKEW // CS-E9QKEW // CS-E12QKEW // CS-E15QKEW

CS-XE7QKEW // CS-XE9QKEW // CS-XE12QKEW



Included with the indoor unit



Optional wired remote control
CZ-RD514C

SEASONAL EFFICIENCY

SEER A++

KIT SILVER PLATED: KIT-XE7-QKE // KIT-XE9-QKE // KIT-XE12-QKE

KIT WHITE: KIT-E7-QKE // KIT-E9-QKE // KIT-E12-QKE // KIT-E15-QKE

Technical focus

- New! This units can be installed on R22 pipings
- Maximum efficiency and comfort with Econavi, now with sunlight detection
- Nanoe-G air purifying system, 99% effective on both airborne and adhesive mould, viruses, bacteria and pollen allergen
- Optional smartphone control
- Mild Dry Cooling: prevent a rapid decrease in room humidity
- Super Quiet! Only 20 dB, equivalent to night-time in the countryside (XE7, XE9 XE12, E7, E9 and E12)
- More powerful airflow to quickly reach the desired temperature

NEW AIR FLOW DISCHARGE IDEAL AIR FLOW FOR HEATING AND FOR COOLING

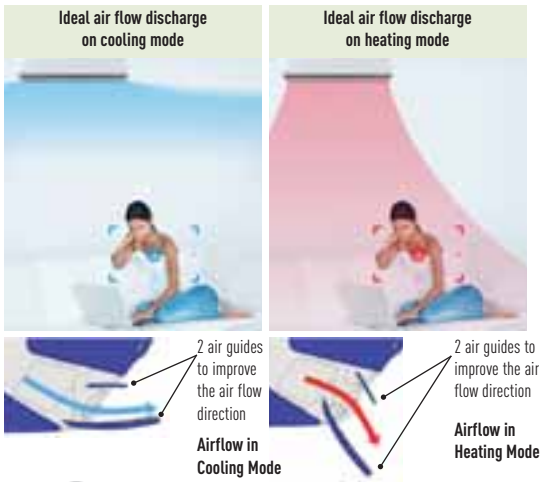



CU-E7QKE
CU-E9QKE



CU-E12QKE
CU-E15QKE

Features

HEALTHY AIR
- Nanoe-G air purifying system
- Mild Dry Cooling operation mode for increased comfort and prevention of skin moisture loss

ENERGY, EFFICIENCY AND ECOLOGY
- Maximum efficiency Inverter system, for bigger savings
- -45% consumption with Econavi on heat pump, and -38% on cooling mode
- R410A refrigerant gas

COMFORT
- Super Quiet (from 20 dB)
- Powerful mode
- Uniform dispersion of airflow
- Automatic vertical airflow control
- Hot start mode, increased comfort on heat pump mode, no cool airflow when process starts
- Automatic restart after power cut

EASE OF USE
- Real time clock with dual ON&OFF timer
- User friendly infrared remote control
- Optional wired weekly timer with 6 settings per day and 42 settings per week
- Connectivity function (indoor unit equipped with PCB port which can be connected to outside network)
- Optional Smartphone control

EASY INSTALLATION AND MAINTENANCE
- NEW! Heating only function by enabling software (only by service partner)
- Removable, washable panel
- 15 m maximum connection distance
- 15 m maximum elevation difference
- Maintenance access through the top panel of the outdoor unit
- Self-diagnosis function

WALL MOUNTED ETHEREA
INVERTER+
SILVER PLATED / WHITE

Etherea with enhanced Econavi sensor and new Nanoe-G air-purifying system: outstanding efficiency, comfort and healthy air combined with state-of-the-art design.

Econavi features an in-built human activity sensor and a new sunlight detection technology to adjust output thereby giving you the best comfort at anytime whilst saving energy. Econavi not only optimizes air flow orientation and volume according to human presence, it also reduces cooling power automatically by no/less sunshine. With Econavi, energy savings of up to 38% are possible, whilst increasing your comfort. Furthermore, the Nanoe-G revolutionary air-purifying system utilises nano technology fine particles to remove and deactivate 99% of both airborne and adhesive micro-organisms like bacteria, viruses and mould.

product design award 2013

Awarded with the prestigious IF Design Award 2013



INTERNET CONTROL READY: Optional. SEER and SCOP: For KIT-XE18-QKE and KIT-E18-QKE. MILD DRY: Maintains a Relative Humidity up to 10% higher than cooling operation. Ideal when sleeping with the air conditioner on.

Kit Silver Plated			**KIT-XE18-QKE**	**–**	**–**	**–**
Kit Silver Plated / with Smartphone Control			**KIT-XE18-QKE-WIFI**	**–**	**–**	**–**
Kit White			**KIT-E18-QKE**	**KIT-E21-QKE**	**KIT-E24-QKE**	**KIT-E28-QKE**
Kit White / with Smartphone Control			**KIT-E18-QKE-WIFI**	**KIT-E21-QKE-WIFI**	**KIT-E24-QKE-WIFI**	**KIT-E28-QKE-WIFI**
Indoor Silver plated			**CS-XE18QKEW**	**–**	**–**	**–**
Indoor White			**CS-E18QKEW**	**CS-E21QKEW**	**CS-E24QKEW**	**CS-E28QKES**
Outdoor			**CU-E18QKE**	**CU-E21QKE**	**CU-E24QKE**	**CU-E28QKE**
Cooling capacity	Nominal (Min - Max)	kW	5,00 (0,98 - 6,00)	6,30 (0,98 - 7,10)	6,80 (0,98 - 8,10)	7,65 (0,98 - 8,60)
	Nominal (Min - Max)	kCal/h	4.300 (840 - 5.160)	5.420 (840 - 6.110)	5.850 (840 - 6.970)	6.580 (840 - 7.400)
SEER	**Nominal**	**Energy Saving**	**6,90** A++	**6,50** A++	**6,10** A++	**6,00** A+
Pdesign (cooling)		kW	5,0	6,3	6,8	7,7
Power input cooling	Nominal (Min - Max)	kW	1,440 (0,280 - 1,990)	2,180 (0,280 - 2,500)	2,080 (0,380 - 2,650)	2,520 (0,380 - 2,920)
Annual electricity consumption (cooling) [1]		kWh/a	254	339	390	449
Heating capacity	Nominal (Min - Max)	kW	5,80 (0,98 - 8,00)	7,20 (0,98 - 8,50)	8,60 (0,98 - 9,90)	9,60 (0,98 - 11,00)
Heating capacity at -7°C	Nominal (Min - Max)	kW	4.990 (840 - 6.880)	6.190 (840 - 7.310)	7.400 (840 - 8.510)	8.260 (840 - 9.460)
SCOP	**Nominal**	**Energy Saving**	**4,20** A+	**4,00** A+	**3,90** A	**3,80** A
Pdesign at -10°C		kW	4,4	4,6	5,5	6,0
Power input heating	Nominal (Min - Max)	kW	1,520 (0,340 - 2,570)	2,090 (0,340 - 2,730)	2,580 (0,450 - 3,100)	3,240 (0,450 - 3,650)
Annual electricity consumption (heating) [1]		kWh/a	1.467	1.610	1.974	2.211
Indoor Unit						
Power source		V	230	230	230	230
Recommended fuse		A	16	20	20	20
Recommended power cable section		mm²	1,5	2,5	2,5	2,5
Connection indoor / outdoor		mm²	4 x 2,5	4 x 2,5	4 x 2,5	4 x 2,5
Current (Nominal)	Cooling / Heating	A	6,4 / 6,8	9,7 / 9,4	9,5 / 11,7	11,5 / 14,5
Maximum current		A	11,3	11,9	14,4	15,5
Air volume	Cooling / Heating	m³/h	1074 / 1158	1.134 / 1.200	1.188 / 1.272	1.266 / 1.314
Moisture removal volume		l/h	2,8	3,5	3,9	4,5
Sound pressure level [2]	Cooling (Hi / Lo / Q-Lo)	dB(A)	44 / 37 / 34	45 / 37 / 34	47 / 38 / 35	49 / 38 / 35
	Heating (Hi / Lo / Q-Lo)	dB(A)	44 / 37 / 34	45 / 37 / 34	47 / 38 / 35	48 / 38 / 35
Sound power level	Cooling / Heating (Hi)	dB	60 / 60	61 / 61	63 / 63	65 / 64
Dimensions	H x W x D	mm	295 x 1.070 x 255	295 x 1.070 x 255	295 x 1.070 x 255	295 x 1.070 x 255
Net weight		kg	13	13	13	13
Air purifier filter			Nanoe-G	Nanoe-G	Nanoe-G	Nanoe-G
Outdoor Unit						
Air volume	Cooling / Heating	m³/h	2.352 / 2.274	2.502 / 2.424	3.012 / 3.012	3.270 / 3.270
Sound pressure level [2]	Cooling / Heating (Hi)	dB(A)	47 / 47	48 / 49	52 / 52	53 / 53
Sound power level	Cooling / Heating (Hi)	dB	61 / 61	62 / 63	66 / 66	67 / 67
Dimensions [3]	H x W x D	mm	695 x 875 x 320	695 x 875 x 320	795 x 875 x 320	795 x 875 x 320
Net weight		kg	46	47	67	67
Piping connections	Liquid pipe / Gas pipe	inch (mm)	1/4" (6,35) / 1/2" (12,70)	1/4" (6,35) / 1/2" (12,70)	1/4" (6,35) / 5/8" (15,88)	1/4" (6,35) / 5/8" (15,88)
Refrigerant loading	R410A	kg	1,24	1,32	1,80	1,80
Elevation difference (in/out)	Max	m	15	15	20	20
Piping length	Min / Max	m	3 / 20	3 / 20	3 / 30	3 / 30
Precharge length	Max	m	7,5	7,5	10	10
Additional charge		g/m	20	20	30	30
Operating range	Cooling Min / Max	°C	-10 / +43	-10 / +43	-10 / +43	-10 / +43
	Heating Min / Max	°C	-15 / +24	-15 / +24	-15 / +24	-15 / +24

Rating Conditions: Cooling Indoor 27°C DB / 19°C WB. Cooling Outdoor 35°C DB / 24°C WB. Heating Indoor 20°C DB. Heating Outdoor 7°C DB / 6°C WB. (DB: Dry Bulb; WB: Wet Bulb)
Connectivity restriction: JKE units are not compatible with QKE units.

1) The annual energy consumption is calculated in accordance with the ErP directive. 2) The Sound pressure level of the units shows the value measured of a position 1 metre in front of the main body and 0,8 m below the unit. The sound pressure is measured in accordance with Eurovent 6/C/006-97 specification. Q-Lo: Quiet mode. Lo: The lowest fan speed. 3) Add 70 mm for piping port.
Specifications subject to change without notice.
For detailed information about ErP, please visit our page http://www.ptc.panasonic.eu



CS-E18QKEW // CS-E21QKEW // CS-E24QKEW // CS-E28QKES

CS-XE18QKEW



Included with the indoor unit



Optional wired remote control
CZ-RD514C

SEASONAL EFFICIENCY

SEER A++

KIT SILVER PLATED: KIT-XE18-QKE

KIT WHITE: KIT-E18-QKE // KIT-E21-QKE // KIT-E24-QKE // KIT-E28-QKE

Technical focus

- New! This units can be installed on R22 pipings
- Maximum efficiency and comfort with Econavi, now with sunlight detection
- Nanoe-G air purifying system, 99% effective on both airborne and adhesive mould, viruses, bacteria and pollen allergen
- Optional smartphone control
- Mild Dry Cooling: prevent a rapid decrease in room humidity
- More powerful airflow to quickly reach the desired temperature

NEW AIR FLOW DISCHARGE IDEAL AIR FLOW FOR HEATING AND FOR COOLING





CU-E18QKE
CU-E21QKE

CU-E24QKE
CU-E28QKE

Features

HEALTHY AIR
- Nanoe-G air purifying system
- Mild Dry Cooling operation mode for increased comfort and prevention of skin moisture loss

ENERGY, EFFICIENCY AND ECOLOGY
- Maximum efficiency Inverter system, for bigger savings
- -45% consumption with Econavi on heat pump, and -38% on cooling mode
- R410A refrigerant gas

COMFORT
- Powerful mode
- Uniform dispersion of airflow
- Automatic vertical airflow control
- Hot start mode, increased comfort on heat pump mode, no cool airflow when process starts
- Automatic restart after power cut

EASE OF USE
- Real time clock with dual ON&OFF timer
- User friendly infrared remote control
- Optional wired weekly timer with 6 settings per day and 42 settings per week
- Connectivity function (indoor unit equipped with PCB port which can be connected to outside network)
- Optional Smartphone control

EASY INSTALLATION AND MAINTENANCE
- Removable, washable panel
- 20 m (for 18 and 21), 30 m (for 24 and 28) maximum connection distance
- 15 m (for 18 and 21), 20 m (for 24 and 28) maximum elevation difference
- Maintenance access through the top panel of the outdoor unit
- Self-diagnosis function

WALL MOUNTED RE TYPE
STANDARD INVERTER

RE Inverter models are powerful and efficient, with an outstanding energy ranking of A++/A+, unique in the market! The RE works up to an outdoor temperature of -15°C in heating mode and -10°C up a outdoor temperature of -15°C in heating and -10 in cooling and still with a high efficiency and capacity! Furthermore, the annual energy consumption has never been so low.
RE has a unique Anti Bacterial Filter in order to enjoy the best quality air, without viruses, mould or bacteria.



SEER and SCOP: For KIT-RE9-QKE and KIT-RE12-QKE. SUPER QUIET: For RE9 and RE12.

Kit			KIT-RE9-QKE	KIT-RE12-QKE	KIT-RE15-QKE	KIT-RE18-QKE	KIT-RE24-QKE
Indoor			**CS-RE9QKE**	**CS-RE12QKE**	**CS-RE15QKE**	**CS-RE18QKE**	**CS-RE24QKE**
Outdoor			**CU-RE9QKE**	**CU-RE12QKE**	**CU-RE15QKE**	**CU-RE18QKE**	**CU-RE24QKE**
Cooling capacity	Nominal (Min - Max)	kW	2,50 (0,85 - 3,00)	3,50 (0,85 - 3,90)	4,20 (0,85 - 4,60)	5,00 (0,98 - 6,00)	6,80 (0,98 - 8,10)
	Nominal (Min - Max)	kCal/h	2.150 (730 - 2.580)	3.010 (730 - 3.350)	3.610 (730 - 3.960)	4.300 (840 - 5.160)	5.850 (840 - 6.970)
SEER	**Nominal**	**Energy Saving**	**6,10** A++	**6,10** A++	**5,60** A+	**6,70** A++	**6,00** A+
Pdesign (cooling)		kW	2,5	3,5	4,2	5,0	6,8
Power input cooling	Nominal (Min - Max)	kW	0,670 (0,250 - 0,950)	1,000 (0,255 - 1,190)	1,260 (0,265 - 1,650)	1,470 (0,280 - 2,030)	2,100 (0,380 - 2,670)
Annual electricity consumption (cooling) [1]		kWh/a	143	201	263	261	397
Heating capacity	Nominal (Min - Max)	kW	3,30 (0,80 - 4,10)	4,00 (0,80 - 5,10)	5,00 (0,80 - 6,80)	5,80 (0,98 - 8,00)	8,60 (0,98 - 9,90)
	Nominal (Min - Max)	kCal/h	2.840 (690 - 3.530)	3.440 (690 - 4.390)	4.300 (690 - 5.850)	4.990 (840 - 6.880)	7.400 (840 - 8.510)
Heating capacity at -7°C	Nominal	kW	2,7	3,30	3,9	4,98	6,13
SCOP	**Nominal**	**Energy Saving**	**4,00** A+	**4,00** A+	**3,80** A	**4,10** A+	**3,80** A
Pdesign at -10°C		kW	2,4	2,8	3,6	4,4	5,5
Power input heating	Nominal (Min - Max)	kW	0,800 (0,195 - 1,130)	1,050 (0,200 - 1,420)	1,350 (0,200 - 2,050)	1,540 (0,340 - 2,600)	2,610 (0,450 - 3,130)
Annual electricity consumption (heating) [1]		kWh/a	840	980	1.326	1.502	2.026
Indoor Unit							
Power source		V	230	230	230	230	230
Recommended fuse		A	16	16	16	16	16
Recommended power cable section		mm²	1,5	1,5	2,5	2,5	2,5
Connection (indoor/outdoor)		mm²	4 x 1,5	4 x 1,5	4 x 1,5	4 x 1,5	4 x 1,5
Current (Nominal)	Cooling / Heating	A	2,95 / 3,55	4,00 / 4,60	5,60 / 6,00	6,60 / 6,90	9,60 / 11,70
Maximum current		A	5,0	6,2	9,2	11,4	14,5
Air volume	Cooling / Heating	m³/h	702 / 768	738 / 768	750 / 804	978 / 1.074	1.104 / 1.170
Moisture removal volume		l/h	1,5	2	2,4	2,8	3,9
Sound pressure level [2]	Cooling (Hi / Lo / Q-Lo)	dB(A)	41 / 26 / 22	42 / 30 / 22	44 / 31 / 29	44 / 37 / -	47 / 38 / -
	Heating (Hi / Lo / Q-Lo)	dB(A)	41 / 27 / 25	42 / 33 / 25	44 / 35 / 28	44 / 37 / -	47 / 38 / -
Sound power level	Cooling (Hi)	dB	57	58	60	60	63
	Heating (Hi)	dB	57	58	60	60	63
Dimensions	H x W x D	mm	290 x 870 x 214	290 x 870 x 214	290 x 870 x 214	290 x 1.070 x 240	290 x 1.070 x 240
Net weight		kg	9	9	9	12	12
Air purifier filter			Anti Bacterial Filter	Anti Bacterial Filter	Anti Bacterial Filter	Anti Bacterial Filter	Anti Bacterial Filter
Silver decoration sheet			Yes	Yes	Yes	Yes	Yes
Outdoor Unit							
Air volume	Cooling / Heating	m³/h	1.788 / 1.740	1.998 / 1.998	1.998 / 1.998	2.064 / 2.040	3.012 / 3.012
Sound pressure level [2]	Cooling (Hi)	dB(A)	47	48	49	47	52
	Heating (Hi)	dB(A)	48	50	51	47	52
Sound power level	Cooling (Hi)	dB	62	63	64	61	66
	Heating (Hi)	dB	63	65	66	61	66
Dimensions [3]	H x W x D	mm	542 x 780 x 289	619 x 824 x 299	619 x 824 x 299	695 x 875 320	795 x 875 x 320
Net weight		kg	33	34	34	46	67
Piping connections	Liquid / Gas pipe	inch (mm)	1/4 (6,35) / 3/8 (9,52)	1/4 (6,35) / 3/8 (9,52)	1/4 (6,35) / 1/2 (12,70)	1/4 (6,35) / 1/2 (12,70)	1/4 (6,35) / 5/8 (15,88)
Refrigerant loading	R410A	kg	0,97	1,02	1,02	1,22	1,80
Elevation difference (in/out)	Max	m	15	15	15	15	20
Piping length	Min / Max	m	3 / 15	3 / 15	3 / 15	3 / 20	3 / 30
Precharge length	Max	m	7,5	7,5	7,5	7,5	10,0
Additional charge		g/m	20	20	20	20	30
Operating range	Cooling Min / Max	°C	-10 / +43	-10 / +43	-10 / +43	-10 / +43	-10 / +43
	Heating Min / Max	°C	-15 / +24	-15 / +24	-15 / +24	-15 / +24	-15 / +24

Rating Conditions: Cooling Indoor 27°C DB / 19°C WB. Cooling Outdoor 35°C DB / 24°C WB. Heating Indoor 20°C DB. Heating Outdoor 7°C DB / 6°C WB. (DB: Dry Bulb; WB: Wet Bulb)
Connectivity restriction: JKE units are not compatible with QKE units.

1) The annual energy consumption is calculated in accordance with the ErP directive. 2) The Sound pressure level of the units shows the value measured of a position 1 metre in front of the main body and 0,8 m below the unit. The sound pressure is measured in accordance with Eurovent 6/C/006-97 specification. Q-Lo: The lowest fan speed. Lo: The second lowest fan speed (the lowest fan speed for RE18/24). 3) Add 70 mm for piping port.
Specifications subject to change without notice.
For detailed information about ErP, please visit our page http://www.ptc.panasonic.eu



CS-RE9QKE // CS-RE12QKE // CS-RE15QKE



Included with the indoor unit.
For RE9, RE12 and RE15.



Included with the indoor unit.
For RE18 and RE24.



Optional wired remote control
CZ-RD514C

KIT-RE9-QKE // KIT-RE12-QKE // KIT-RE15-QKE // KIT-RE18-QKE // KIT-RE24-QKE

Technical focus

- **New!** Design
- **New!** Wired Controller (optional)
- **New!** This units can be installed on R22 pipings
- Complete line-up of standard Inverter models
- Quieter indoor units
- High energy savings
- Long connection distance (from 15 m up to 30 m)

Features

HEALTHY AIR
- Anti Bacterial Filter
- Odour-removing function
- Anti-mould filter

ENERGY, EFFICIENCY AND ECOLOGY
- Inverter system
- R410A refrigerant gas

COMFORT
- Super Quiet
- Automatic vertical airflow control
- Hot start mode
- Automatic restart
- Simple change over

EASE OF USE
- **New!** Wired Controller (optional)
- User friendly infrared remote control

EASY INSTALLATION AND MAINTENANCE
- 15 m maximum connection distance (20 m for RE18 and 30 m for RE24)
- Removable, washable panel
- Maintenance access through the top panel of the outdoor unit
- Self-diagnosis function



CS-RE18QKE // CS-RE24QKE



CU-RE9QKE



CU-RE12QKE
CU-RE15QKE



CU-RE18QKE



CU-RE24QKE

FLOOR CONSOLE TYPE
INVERTER+

Console designed for discreet integration on walls, and for high performance, specifically in heat mode even when the outside temperature is as low as -15°C.
Double airflow for improved comfort and temperature dispersion: through the top for an efficient cooling mode, through the bottom for quick heating.



SEER and SCOP: For KIT-E18-PFE.

KIT			KIT-E9-PFE	KIT-E12-PFE	KIT-E18-PFE
Indoor			**CS-E9GFEW**	**CS-E12GFEW**	**CS-E18GFEW**
Outdoor			**CU-E9PFE**	**CU-E12PFE**	**CU-E18PFE**
Cooling capacity	Nominal (Min - Max)	kW	2,50 (0,85 - 3,00)	3,50 (0,85 - 3,80)	5,00 (0,98 - 5,60)
	Nominal (Min - Max)	kCal/h	2.150 (730 - 2.580)	3.010 (730 - 3.270)	4.300 (840 - 4.820)
SEER	**Nominal**	**Energy Saving**	**6,10** A++	**5,80** A+	**6,20** A++
Pdesign (cooling)		kW	**2,50**	**3,50**	**5,00**
Power input cooling	Nominal	kW	0,560	0,940	1,540
Annual electricity consumption (cooling) [1]		kWh/a	143	211	282
Heating capacity	Nominal (Min - Max)	kW	3,40 (0,85 - 5,00)	4,00 (0,85 - 6,00)	5,80 (0,98 - 7,10)
	Nominal (Min - Max)	kCal/h	2.920 (730 - 4.300)	3.440 (730 - 5.160)	4.990 (840 - 6.110)
Heating capacity at -7°C	Nominal	kW	2,35	2,86	3,87
SCOP	**Nominal**	**Energy Saving**	**3,80** A	**3,80** A	**3,90** A
Pdesign at -10°C		kW	**2,7**	**3,2**	**4,4**
Power input heating	Nominal	kW	0,810	1,000	1,600
Annual electricity consumption (heating) [1]		kWh/a	995	1.179	1.579
Indoor Unit					
Power source		V	230	230	230
Recommended fuse		A	16	16	16
Recommended power cable section		mm²	1,5	1,5	1,5
Connection		mm²	4 x 1,5	4 x 1,5	4 x 1,5
Current (Nominal)	Cooling	A	2,6	4,4	7,2
	Heating	A	3,75	4,6	7,5
Air volume	Cooling / Heating	m³/h	558 / 576	570 / 600	660 / 780
Moisture removal volume		l/h	1,4	2,0	2,8
Sound pressure level [2]	Cooling (Hi / Lo / S-Lo)	dB(A)	38 / 27 / 23	39 / 28 / 24	44 / 36 / 32
	Heating (Hi / Lo / S-Lo)	dB(A)	38 / 27 / 23	39 / 27 / 23	46 / 36 / 32
Sound power level	Cooling (Hi)	dB	54	55	60
	Heating (Hi)	dB	54	55	62
Dimensions	H x W x D	mm	600 x 700 x 210	600 x 700 x 210	600 x 700 x 210
Net weight		kg	14	14	14
Outdoor Unit					
Air volume	Cooling / Heating	m³/h	1.788 / 1.788	1.998 / 1.998	2.352 / 2.274
Sound pressure level [2]	Cooling (Hi)	dB(A)	46	48	47
	Heating (Hi)	dB(A)	47	50	48
Sound power level	Cooling (Hi)	dB	61	63	61
	Heating (Hi)	dB	62	65	62
Dimensions [3]	H x W x D	mm	542 x 780 x 289	619 x 824 x 299	695 x 875 x 320
Net weight		kg	33	34	46
Piping connections	Liquid pipe	inch (mm)	1/4 (6,35)	1/4 (6,35)	1/4 (6,35)
	Gas pipe	inch (mm)	3/8 (9,52)	3/8 (9,52)	1/2 (12,70)
Refrigerant loading	R410A	kg	0,970	1,000	1,120
Elevation difference (in/out)	Max	m	5	5	15
Piping length	Min / Max	m	3 / 15	3 / 15	3 / 20
Precharge length	Max	m	7,5	7,5	7,5
Additional charge		g/m	20	20	20
Operating range	Cooling Min / Max	°C	+16 / +43	+16 / +43	+16 / +43
	Heating Min / Max	°C	-15 / +24	-15 / +24	-15 / +24

Rating Conditions: Cooling Indoor 27°C DB / 19°C WB. Cooling Outdoor 35°C DB / 24°C WB. Heating Indoor 20°C DB. Heating Outdoor 7°C DB / 6°C WB. (DB: Dry Bulb; WB: Wet Bulb)
Connectivity restriction: JKE units are not compatible with QKE units.

1) The annual energy consumption is calculated in accordance with the ErP directive. 2) The Sound pressure level of the units shows the value measured of a position 1 metre in front of the main body and 1 m below the unit. The sound pressure is measured in accordance with Eurovent 6/C/006-97 specification. 3) Add 70 mm for piping port.
Specifications subject to change without notice.
For detailed information about ErP, please visit our page http://www.ptc.panasonic.eu





Included with
the indoor unit

KIT-E9-PFE // KIT-E12-PFE // KIT-E18-PFE

Technical focus

- **New!** This units can be installed on R22 pipings
- More efficient than ever for improved energy consumption and higher savings
- Heating mode down to -15°C with high efficiency
- Double airflow for better efficiency
- Powerful mode for quick temperature setting
- R410A refrigerant gas

Features

HEALTHY AIR
- Soft dry operation mode
- Odour-removing function

ENERGY, EFFICIENCY AND ECOLOGY
- Maximum efficiency Inverter system
- R410A refrigerant gas

COMFORT
- Super Quiet
- Powerful mode
- Automatic vertical airflow control
- Hot start mode
- Automatic restart

EASE OF USE
- Real time clock with single ON&OFF timer
- User friendly infrared remote control

EASY INSTALLATION AND MAINTENANCE
- Removable, washable panel
- Maximum connection distance 15m (E9, 12), 20m (E18)
- Maintenance access through the top panel of the outdoor unit
- Self-diagnosis function

UPPER & LOWER VANE BLOW

Optimum air flow from the top and bottom of the unit assures that even your feet are kept comfortably warm. (Only during heating)

Upward and downward air flow warms the whole room uniformly	Upward air flow efficiently cools the entire room

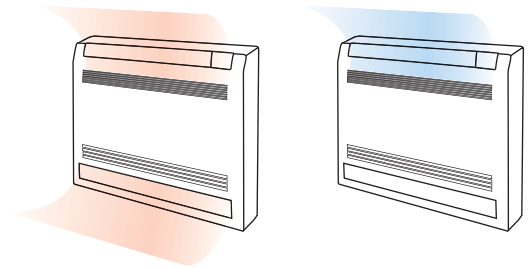



CU-E9PFE
CU-E12PFE



CU-E18PFE

4 WAY 60x60 CASSETTE
INVERTER

Specially designed for offices, retail and restaurant applications, this cassette fits perfectly into 60x60 or 70x70 ceiling grids.
Featuring the best efficiency in its category (heating and cooling up to -10°C, this new cassette in 9 and 12 kW versions can also be connected to KNX, Modbus, EnOcean interfaces for easy integration with your BMS systems. Interfaces have dry contacts (ON/OFF, error message) to enable easy integration.
With the new Intesishome interface, you can also control the cassette from your smartphone and internet very easily!
Fit Panasonic's Cassette Type, and start to save all year round!

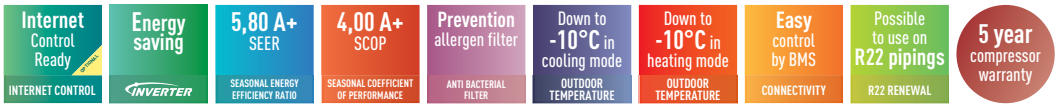

INTERNET CONTROL READY: Optional. SEER and SCOP: For KIT-E9-PB4EA. ANTI BACTERIAL FILTER: Optional.

KIT			KIT-E9-PB4EA	KIT-E12-PB4EA
Indoor			**CS-E9PB4EA**	**CS-E12PB4EA**
Outdoor			**CU-E9PB4EA**	**CU-E12PB4EA**
Panel			**CZ-BT20E**	**CZ-BT20E**
Cooling capacity	Nominal (Min - Max)	kW	2,50 (0,85 - 3,00)	3,40 (0,85 - 4,00)
	Nominal (Min - Max)	kCal/h	2.150 (731 - 2.780)	2.920 (730 - 3.440)
SEER		**W/W**	**5,80** A+	**5,60** A+
Pdesign (cooling)		kW	2,50	3,40
Power input cooling	Nominal	kW	0,550 (0,240 - 0,740)	0,890 (0,240 - 1,200)
Annual electricity consumption (cooling) [1]		kWh/a	151	213
Heating capacity	Nominal (Min - Max)	kW	3,20 (0,85 - 4,80)	4,50 (0,85 - 5,60)
	Nominal (Min - Max)	kCal/h	2.752 (731 - 4.130)	3.870 (730 - 4.820)
Heating capacity at -7°C	Nominal	kW	2,60	3,00
SCOP	**Nominal**	**Energy Saving**	**4,00** A+	**3,80** A
Pdesign at -10°C		kW	2,70	3,00
Power input heating	Nominal	kW	0,800 (0,230 - 1,350)	1,420 (0,230 - 2,000)
Annual electricity consumption (heating) [1]		kWh/a	945	1.105
Indoor Unit				
Power source		V	230	230
Recommended fuse		A	16	16
Recommended power cable section		mm^2	1,5	1,5
Connection		mm^2	4 x 1,5 to 2,5	4 x 1,5 to 2,5
Current (Nominal)	Cooling / Heating	A	2,65 / 3,85	4,2 / 6,5
Air volume	Cooling / Heating	m^3/h	630 / 648	630 / 648
Moisture removal volume		l/h	1,5	2,3
Sound pressure level [2]	Cooling (Hi / Lo / S-Lo)	dB(A)	34 / 26 / 23	34 / 26 / 23
	Heating (Hi / Lo / S-Lo)	dB(A)	35 / 28 / 25	35 / 28 / 25
Sound power level	Cooling (Hi)	dB	50	50
	Heating (Hi)	dB	51	51
Dimensions (H x W x D)	Indoor	mm	260 x 575 x 575	260 x 575 x 575
	Panel	mm	51 x 700 x 700	51 x 700 x 700
Net weight	Indoor / Panel	kg	18 / 2,5	18 / 2,5
Dust filter			Yes	Yes
Antiallergic filter	Optional		CZ-SA22P	CZ-SA22P
Outdoor Unit				
Power source		V	230	230
Air volume	Cooling / Heating	m^3/h	1.830 / 1.734	1.980 / 1.836
Sound pressure level [2]	Cooling / Heating (Hi)	dB(A)	45 / 46	45 / 47
Sound power level	Cooling / Heating (Hi)	dB	58 / 61	60 / 62
Dimensions [3]	H x W x D	mm	622 x 824 x 299	695 x 875 x 320
Net weight		kg	36	45
Piping connections	Liquid / Gas pipe	Inch (mm)	1/4 (6,35) / 3/8 (9,52)	1/4 (6,35) / 3/8 (9,52)
Refrigerant loading	R410A	kg	1,13	1,13
Elevation difference (in/out)	Max	m	15	15
Piping length	Min / Max	m	3 / 20	3 / 20
Precharge length	Max	m	10	10
Additional charge		g/m	20	20
Operating range	Cooling (Min / Max)	°C	-10 / +43	-10 / +43
	Heating (Min / Max)	°C	-10 / +24	-10 / +24

Rating Conditions: Cooling Indoor 27°C DB / 19°C WB. Cooling Outdoor 35°C DB / 24°C WB. Heating Indoor 20°C DB. Heating Outdoor 7°C DB / 6°C WB. (DB: Dry Bulb; WB: Wet Bulb)

1) The annual energy consumption is calculated in accordance with the ErP directive. 2) The Sound pressure level of the units shows the value measured of a position 1 metre in front of the main body and 1,5 m below the ceiling in the centre of the unit. The sound pressure is measured in accordance with Eurovent 6/C/006-97 specification. 3) Add 70 mm for piping port.
Specifications subject to change without notice.
For detailed information about ErP, please visit our page http://www.ptc.panasonic.eu





Included with the indoor unit



Optional wired remote control
CZ-RD52CP



Panel
CZ-BT20E

KIT-E9-PB4EA // KIT-E12-PB4EA

Technical focus

- **NEW!** 9 and 12kW Cassettes can be controlled by Intesishome, KNX, EnOcean and Modbus
- **New!** This units can be installed on R22 pipings
- Designed for easy installation in the standard European 60x60 ceiling grid
- Operation down to -10°C in cooling and heating modes
- Piping length up to 30 m
- Maximum elevation difference up to 20 m
- Ultra compact outdoor units for easy installation
- Real time clock with single ON&OFF timer
- High pressure selector in case of high ceilings (higher than 2,7m)
- Drain pump included (max 750mm high)
- Air fresh entry available on the cassette

INDOOR UNIT DRAIN PIPING

The height of drain may be possible up to 750 mm.

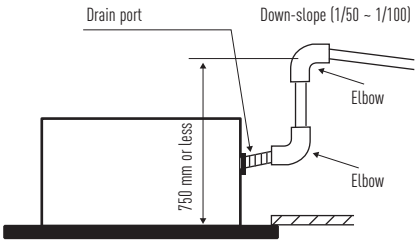

Features

HEALTHY AIR
- CZ-SA22P Anti Bacterial Filter (optional)
- Odour-removing function

ENERGY, EFFICIENCY AND ECOLOGY
- Maximum efficiency Inverter system

COMFORT
- Super Quiet
- Powerful mode
- Automatic vertical airflow control ambient temperature
- Hot start mode
- Real time clock with single ON&OFF timer
- Automatic restart after power cut

EASE OF USE
- Ergonomic infrared remote control

EASY INSTALLATION AND MAINTENANCE
- Removable, washable panel of the indoor unit
- Top panel maintenance access for the outdoor unit



CU-E9PB4EA



CU-E12PB4EA

LOW STATIC PRESSURE HIDE AWAY
INVERTER

Designed for homes, offices, retail and restaurants, this Duct is ideal for small rooms where the air conditioning and the heating should be nicely integrated and where high comfort and efficiency is needed.
The new 9 and 12kW duct can also be connected to KNX, Modbus, EnOcean interfaces for easy integration with your BMS systems. This interfaces have dry contacts (ON/OFF, error message) for easy integration.
With the new Intesishome interface, you can control the Duct also from your smartphone and internet very easily!



INTERNET CONTROL READY: Optional. SEER and SCOP: For KIT-E9-PD3EA.

KIT			KIT-E9-PD3EA	KIT-E12-PD3EA
Indoor			**CS-E9PD3EA**	**CS-E12PD3EA**
Outdoor			**CU-E9PD3EA**	**CU-E12PD3EA**
Cooling capacity	Nominal (Min-Max)	kW	2,50 (0,85 - 3,00)	3,40 (0,85 - 4,00)
	Nominal (Min-Max)	kCal/h	2.150 (731 - 2.580)	2.920 (730 - 3.440)
SEER		**W/W**	**5,80** A+	**5,60** A
Pdesign (cooling)		kW	2,50	3,40
Power input cooling	Nominal (Min-Max)	kW	0,590 (0,240 - 0,760)	0,880 (0,240 - 1,160)
Annual electricity consumption (cooling) [1]		kWh/a	151	213
Heating capacity	Nominal (Min-Max)	kW	3,20 (0,85 - 4,60)	4,00 (0,85 - 5,10)
	Nominal (Min-Max)	kCal/h	2.752 (731 - 3.960)	3.440 (730 - 4.390)
Heating capacity at -7°C	Nominal	kW	2,60	3,00
SCOP	**Nominal**	**Energy Saving**	**4,20** A+	**3,80** A
Pdesign at -10°C		kW	**2,60**	**2,90**
Power input heating	Nominal (Min-Max)	kW	0,860 (0,230 - 1,380)	1,130 (0,230 - 1,550)
Annual electricity consumption (heating) [1]		kWh/a	867	1.068
Indoor Unit				
Power source		V	230	230
Recommended fuse		A	16	16
Recommended power cable section		mm^2	1,5	1,5
Connection		mm^2	4 x 1,5 to 2,5	4 x 1,5 to 2,5
Current (Nominal)	Cooling / Heating	A	2,8 / 4,00	4,1 / 5,15
External static pressure [2]	S-Hi / Hi / Me / Lo	Pa	110 / 60 / 30 / 20	80 / 50 / 25 / 10
Air volume	Cooling / Heating	m^3/h	414 / 486	540 / 630
Moisture removal volume		l/h	1,50	2,30
Sound pressure level [3]	Cooling (Hi / Lo / S-Lo)	dB(A)	33 / 27 / 24	33 / 27 / 24
	Heating (Hi / Lo / S-Lo)	dB(A)	35 / 28 / 25	35 / 28 / 25
Sound power level	Cooling (Hi)	dB	49	49
	Heating (Hi)	dB	51	51
Dimensions	H x W x D	mm	235 x 750 x 370	235 x 750 x 370
Net weight		kg	17	17
Dust filter			No	No
Outdoor Unit				
Power source		V	230	230
Air volume	Cooling/Heating	m^3/h	1.878 / 1.782	2.052 / 1.836
Sound pressure level [3]	Cooling / Heating (Hi)	dB(A)	47 / 47	46 / 47
Sound power level	Cooling / Heating (Hi)	dB	62 / 62	61 / 62
Dimensions [4]	H x W x D	mm	622 x 824 x 299	695 x 875 x 320
Net weight		kg	36	45
Piping connections	Liquid / Gas pipe	Inch (mm)	1/4 (6,35) / 3/8 (9,52)	1/4 (6,35) / 3/8 (9,52)
Refrigerant loading	R410A	kg	1,10	1,14
Elevation difference (in/out)	Max	m	15	15
Piping length	Min / Max	m	3 / 20	3 / 20
Precharge length	Max	m	7,5	7,5
Additional charge		g/m	20	20
Operating range	Cooling Min/Max	°C	-10 / +43	-10 / +43
	Heating Min/Max	°C	-10 / +24	-10 / +24

Rating Conditions: Cooling Indoor 27°C DB / 19°C WB. Cooling Outdoor 35°C DB / 24°C WB. Heating Indoor 20°C DB. Heating Outdoor 7°C DB / 6°C WB. (DB: Dry Bulb; WB: Wet Bulb)

1) The annual energy consumption is calculated in accordance with the ErP directive. 2) The specification listed on the table indicates values under the condition of 29 Pa (3,0 mmAq) which are applied for factory default setting. Change switch on PCB from Hi to Shi to have more than 6,0 mmAq. 3) The Sound pressure level of the units shows the value measured of a position of 1.5 m below the unit with 1 m duct on the suction side and 2 m duct on the discharge side. The sound pressure is measured in accordance with Eurovent 6/C/006-97 specification. 4) Add 100 mm for indoor unit or 70 mm for outdoor unit for piping port.
Specifications subject to change without notice.
For detailed information about ErP, please visit our page http://www.ptc.panasonic.eu





Included with
the indoor unit

KIT-E9-PD3EA // KIT-E12-PD3EA

Technical focus

- NEW! 9 and 12kW duct type can be controlled by Intesishome, KNX, EnOcean and Modbus
- New! This units can be installed on R22 pipings
- Eco mode for 20% energy saving
- Extremely compact indoor units without losing static pressure (only 235 mm high)
- Weekly timer, 42 settings per week
- Easy check mode for failure detection
- Drain pump included (max 200 mm)

Features

ENERGY, EFFICIENCY AND ECOLOGY
- Maximum efficiency Inverter system
- R410A environmentally friendly refrigerant gas

COMFORT
- Automatic start after a power cut
- Automatic fan operation mode
- Soft dry operation mode
- Hot start mode

EASE OF USE
- Weekly On/Off timer (6 settings per day and 42 per week)
- Wired remote control

EASY INSTALLATION AND MAINTENANCE
- Installation using existing pipes
- Selectable static pressure up to 7 mmAq
- Self-diagnostic function
- Condensation control
- Ultra compact indoor unit

CONNECTING THE DRAIN PIPING

Should there be any obstacle preventing the drain piping from being extended smoothly, the drain piping can be raised outside of the main unit as shown in the illustration below.

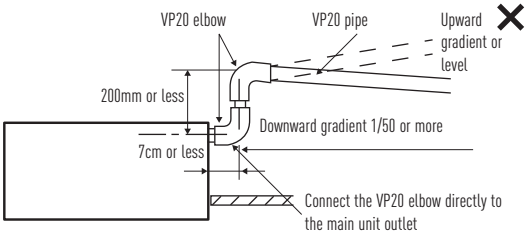



CU-E9PD3EA



CU-E12PD3EA

MRE WALL MOUNTED 2x1
STANDARD INVERTER

MRE Multi Inverter models are powerful and efficient and are always there when you need them.

Furthermore, with the Anti Bacterial Filter, you can always enjoy the best quality air, without viruses, moulds or bacteria.



Kit			KIT-2MRE77-PBE	KIT-2MRE79-PBE	KIT-2MRE712-PBE	KIT-2MRE99-PBE	KIT-2MRE77-PKE	KIT-2MRE79-PKE
Indoor			**CS-MRE7PKE**	**CS-MRE7PKE**	**CS-MRE7PKE**	**CS-MRE9PKE**	**CS-MRE7PKE**	**CS-MRE7PKE**
			CS-MRE7PKE	**CS-MRE9PKE**	**CS-MRE12PKE**	**CS-MRE9PKE**	**CS-MRE7PKE**	**CS-MRE9PKE**
Outdoor			CU-2RE15PBE	CU-2RE15PBE	CU-2RE15PBE	CU-2RE15PBE	CU-2RE18PBE	CU-2RE18PBE
Cooling capacity	Nominal (Min - Max)	kW	4,00 (1,50 - 4,60)	4,40 (1,50 - 4,80)	4,40 (1,50 - 4,80)	4,40 (1,50 - 4,80)	4,00 (1,50 - 4,60)	4,50 (1,50 - 4,80)
	Nominal (Min - Max)	kCal/h	3.440 (1.290 - 3.956)	3.784 (1.290 - 4.128)	3.784 (1.290 - 4.128)	3.784 (1.290 - 4.128)	3.440 (1.290 - 3.956)	3.870 (1.290 - 4.128)
Cooling capacity room A	Nominal	kW	2,00	1,95	1,70	2,20	2,00	2,00
Cooling capacity room B	Nominal	kW	2,00	2,45	2,70	2,20	2,00	2,50
SEER	**Nominal**	**Energy Saving**	**6,30** A++	**6,50** A++	**6,50** A++	**6,50** A++	**6,10** A++	**6,30** A++
Pdesign (cooling)		kW	4,40	4,40	4,40	4,40	4,80	4,80
Power input cooling	Nominal (Min - Max)	kW	1,170 (0,270 - 1,340)	1,300 (0,270 - 1,520)	1,300 (0,270 - 1,520)	1,300 (0,270 - 1,520)	1,160 (0,270 - 1,340)	1,400 (0,270 - 1,510)
Annual electricity consumption (cooling) [1]		kWh/a	237	237	237	237		
Heating capacity	Nominal (Min - Max)	kW	4,80 (1,10 - 6,30)	4,80 (1,10 - 6,30)	4,80 (1,10 - 6,50)	4,80 (1,10 - 6,50)	5,20 (1,10 - 6,30)	5,20 (1,10 - 6,30)
	Nominal (Min - Max)	kCal/h	4.128 (946 - 5.418)	4.128 (946 - 5.418)	4.128 (946 - 5.590)	4.128 (946 - 5.590)	4.472 (946 - 5.418)	4.472 (946 - 5.418)
Heating capacity at -7°C	Nominal	kW	3.220	3.220	3.220	3.220	3.540	3.540
Heating capacity room A	Nominal	kW	2,40	2,15	1,85	2,40	2,60	2,60
Heating capacity room B	Nominal	kW	2,40	2,65	2,95	2,40	2,60	2,90
SCOP	**Nominal**	**Energy Saving**	**3,80** A	**4,00** A+	**4,00** A+	**4,00** A+	**3,80** A	**3,80** A
Pdesign at -10°C		kW	3,60	3,60	3,60	3,60	3,80	3,80
Power input heating	Nominal (Min - Max)	kW	1,200 (0,240 - 1,610)	1,200 (0,240 - 1,610)	1,200 (0,240 - 1,670)	1,200 (0,240 - 1,670)	1,300 (0,240 - 1,610)	1,300 (0,240 - 1,610)
Annual electricity consumption (heating) [1]		kWh/a	1.260	1.260	1.260	1.260		
Indoor unit								
Connection		mm²	4 x 1,5	4 x 1,5	4 x 1,5	4 x 1,5	4 x 1,5	4 x 1,5
Current (Nominal)	Cooling / Heating	A	5,45 / 5,35	6,10 / 5,35	6,10 / 5,35	6,10 / 5,35	5,45 / 5,80	6,10 / 5,80
Air volume	Cooling	m³/h	606 (E7) / 606 (E7)	606 (E7) / 618 (E9)	606 (E7) / 654 (E12)	618 (E9) / 618 (E9)	606 (E7) / 606 (E7)	606 (E7) / 618 (E9)
Moisture removal volume	Cooling	l/h	1,3 (E7) / 1,3 (E7)	1,3 (E7) / 1,5 (E9)	1,1 (E7) / 1,6 (E12)	1,4 (E9) / 1,4 (E9)	1,3 (E7)	1,3 (E7) / 1,5 (E9)
Sound pressure level [2]	Cooling & Heating (Lo)	dB(A)	29 (E7) / 29 (E7)	29 (E7) / 29 (E9)	29 (E7) / 32 (E12)	29 (E9) / 29 (E9)	29 (E7) / 29 (E7)	29 (E7) / 29 (E9)
Sound power level	Cooling & Heating (Hi)	dB	56 (E7) / 56 (E7)	56 (E7) / 56 (E9)	56 (E7) / 60 (E12)	56 (E9) / 56 (E9)	56 (E7) / 56 (E7)	56 (E7) / 56 (E9)
Dimensions	H x W x D	mm	290 x 870 x 214	290 x 870 x 214	290 x 870 x 214	290 x 870 x 214	290 x 870 x 214	290 x 870 x 214
Net weight		kg	9	9	9	9	9	9
Air purifier filter			Anti Bacterial Filter	Anti Bacterial Filter	Anti Bacterial Filter	Anti Bacterial Filter	Anti Bacterial Filter	Anti Bacterial Filter
Outdoor unit								
Power source		V	230	230	230	230	230	230
Recommended fuse		A	16	16	16	16	16	16
Recommended power cable section		mm²	1,5	1,5	1,5	1,5	1,5	1,5
Air volume	Cooling / Heating	m³/h	1.962 / 1.962	1.962 / 1.962	1.962 / 1.962	1.962 / 1.962	2.214 / 2.416	2.214 / 2.416
Sound pressure level [2]	Cooling / Heating (Hi)	dB(A)	47 / 49	47 / 49	47 / 49	47 / 49	49 / 51	49 / 51
Sound power level	Cooling / Heating (Hi)	dB	62 / 64	62 / 64	62 / 64	62 / 64	64 / 66	64 / 66
Dimensions [3]	H x W x D	mm	619 x 824 x 299	619 x 824 x 299	619 x 824 x 299	619 x 824 x 299	619 x 824 x 299	619 x 824 x 299
Net weight		kg	39	39	39	39	39	39
Piping connections	Liquid pipe / Gas pipe	inch (mm)	1/4 (6,35) / 3/8 (9,52)	1/4 (6,35) / 3/8 (9,52)	1/4 (6,35) / 3/8 (9,52)	1/4 (6,35) / 3/8 (9,52)	1/4 (6,35) / 3/8 (9,52)	1/4 (6,35) / 3/8 (9,52)
Refrigerent Loading	R410A	kg	39	1,45	1,45	1,45	1,45	1,45
Elevation difference (in/out) [4]	Max	m	10	10	10	10	10	10
Piping length (total)	Min / Max	m	3 / 30	3 / 30	3 / 30	3 / 30	3 / 30	3 / 30
Piping length (one unit)	Min / Max	m	3 / 20	3 / 20	3 / 20	3 / 20	3 / 20	3 / 20
Precharge length	Max	m	20	20	20	20	20	20
Additional charge		g/m	20	20	20	20	20	20
Operating range	Cooling Min / Max	°C	16 / 43	16 / 43	16 / 43	16 / 43	16 / 43	16 / 43
	Heating Min / Max	°C	-10 / 24	-10 / 24	-10 / 24	-10 / 24	-10 / 24	-10 / 24

Rating Conditions: Cooling Indoor 27°C DB / 19°C WB. Cooling Outdoor 35°C DB / 24°C WB. Heating Indoor 20°C DB. Heating Outdoor 7°C DB / 6°C WB. (DB: Dry Bulb; WB: Wet Bulb)

1) The annual energy consumption is calculated in accordance with the ErP directive. 2) The Sound pressure level of the units shows the value measured of a position 1 metre in front of the main body and 0,8 m below the unit. The sound pressure is measured in accordance with Eurovent 6/C/006-97 specification. 3) Add 70 mm for piping port. 4) When installing the outdoor unit at a higher position than the indoor unit.
Specifications subject to change without notice.
For detailed information about ErP, please visit our page http://www.ptc.panasonic.eu



Included with
the indoor unit

	KIT-2MRE712-PKE	KIT-2MRE99-PKE	KIT-2MRE912-PKE	KIT-2MRE1212-PKE
	CS-MRE7PKE	CS-MRE9PKE	CS-MRE9PKE	CS-MRE12PKE
	CS-MRE12PKE	CS-MRE9PKE	CS-MRE12PKE	CS-MRE12PKE
	CU-2RE18PBE	CU-2RE18PBE	CU-2RE18PBE	CU-2RE18PBE
	4,80 (1,50 - 4,90)	4,80 (1,50 - 5,00)	4,80 (1,50 - 5,00)	4,80 (1,50 - 5,00)
	3.916 (1.290 - 4.214)	3.916 (1.290 - 4.300)	3.916 (1.290 - 4.300)	3.916 (1.290 - 4.300)
	1.85	2,35	2,10	2,40
	2.95	2,35	2,70	2,40
	6,50 A++	6,50 A++	6,50 A++	6,50 A++
	4,80	4,80	4,80	4,80
	1,400 (0,270 - 1,530)	1,490 (0,270 - 1,580)	1,490 (0,270 - 1,560)	1,490 (0,270 - 1,580)
		258		
	5,80 (1,10 - 6,70)	5,20 (1,10 - 6,70)	5,80 (1,10 - 6,70)	5,80 (1,10 - 6,70)
	4.988 (946 - 5.762)	4.472 (946 - 5.762)	4.988 (946 - 5.762)	4.988 (946 - 5.762)
	3.540	3.540	3.540	3.540
	2,00	2,60	2,30	2,30
	3,20	2,60	2,95	2,95
	4,00 A+	4,00 A+	4,00 A+	4,00 A+
	3,80	3,80	3,80	3,80
	1,320 (0,240 - 1,720)	1,340 (0,240 - 1,740)	1,320 (0,240 - 1,720)	1,300 (0,240 - 1,700)
		1.330		
	4 x 1,5	4 x 1,5	4 x 1,5	4 x 1,5
	6,50 / 5,85	6,40 / 5,95	6,95 / 5,85	6,95 / 5,75
	606 (E7) / 654 (E12)	618 (E9) / 618 (E9)	618 (E9) / 654 (E12)	654 (E12) / 654 (E12)
	1,2 (E7) / 1,5 (E12)	1,5	1,4 / 1,6	1,5
	29 (E7) / 32 (E12)	29 (E9) / 29 (E9)	29 (E9) / 32 (E12)	32 (E12) / 32 (E12)
	56 (E7) / 60 (E12)	56 (E9) / 56 (E9)	56 (E7) / 60 (E12)	60 (E12) / 60 (E12)
	290 x 870 x 214	290 x 870 x 214	290 x 870 x 214	290 x 870 x 214
	9	9	9	9
	Anti Bacterial Filter	Anti Bacterial Filter	Anti Bacterial Filter	Anti Bacterial Filter
	230	230	230	230
	16	16	16	16
	1,5	1,5	1,5	1,5
	2.214 / 2.416	2.214 / 2.416	2.214 / 2.416	2.214 / 2.416
	49 / 51	49 / 51	49 / 51	49 / 51
	64 / 66	64 / 66	64 / 66	64 / 66
	619 x 824 x 299	619 x 824 x 299	619 x 824 x 299	619 x 824 x 299
	39	39	39	39
	1/4 (6,35) / 3/8 (9,52)	1/4 (6,35) / 3/8 (9,52)	1/4 (6,35) / 3/8 (9,52)	1/4 (6,35) / 3/8 (9,52)
	1,45	1,45	1,45	1,45
	10	10	10	10
	3 / 30	3 / 30	3 / 30	3 / 30
	3 / 20	3 / 20	3 / 20	3 / 20
	20	20	20	20
	20	20	20	20
	16 / 43	16 / 43	16 / 43	16 / 43
	-10 / 24	-10 / 24	-10 / 24	-10 / 24

KIT-2MRE77-PBE // KIT-2MRE79-PBE // KIT-2MRE712-PBE // KIT-2MRE99-PBE // KIT-2MRE77-PKE // KIT-2MRE79-PKE // KIT-2MRE712-PKE // KIT-2MRE99-PKE // KIT-2MRE912-PKE // KIT-2MRE1212-PKE

Technical focus

- New! This units can be installed on R22 pipings
- Impressive energy savings
- Large elevation distance (10 m)
- Large piping length (30 m)

Features

HEALTHY AIR
- New generation Anti Bacterial Filter with 10-year warranty
- Odour-removing function
- Anti-mould filter

ENERGY, EFFICIENCY AND ECOLOGY
- Inverter system
- R410A refrigerant gas

COMFORT
- Automatic vertical airflow control
- Hot start mode
- Automatic restart

EASE OF USE
- Real time clock with single ON&OFF timer
- User friendly infrared remote control

EASY INSTALLATION AND MAINTENANCE
- 30 m maximum connection distance
- Removable, washable panel
- Maintenance access through the top panel of the outdoor unit
- Self-diagnosis function



CU-2RE15PBE
CU-2RE18PBE

ETHEREA MULTI SPLIT 2x1
INVERTER+

Etherea with enhanced Econavi sensor and new Nanoe-G air-purifying system: outstanding efficiency, comfort and healthy air combined with state-of-the-art design

Econavi features an in-built human activity sensor and a new sunlight detection technology to adjust output thereby giving you the best comfort at anytime whilst saving energy. Econavi not only optimizes air flow orientation and volume according to human presence, it also reduces cooling power automatically by no/less sunshine. With Econavi, energy savings of up to 38% are possible, whilst increasing your comfort.
Furthermore, the Nanoe-G revolutionary air-purifying system utilises nano technology fine particles to remove and deactivate 99% of both airborne and adhesive micro-organisms like bacteria, viruses and mould.
Using a Multi Split 2x1 Inverter+ system with the outdoor unit CU-2E15PBE instead of 2 individual mono split Inverter+ systems, you reduce consumption and thus save more! Up to 16%! Furthermore, using a Multi Split system, you save space on the outdoor unit, making it easier to install in small spaces.

product design award 2013

Awarded the prestigious IF Design Award 2013



INTERNET CONTROL READY: Optional. SEER and SCOP: For KIT-2XE79-QBE and KIT-2E79-QBE.

Silver Kit			**KIT-2XE77-QBE**	**KIT-2XE79-QBE**	**KIT-2XE712-QBE**	**KIT-2XE99-QBE**
Silver Kit with Smartphone Control			**KIT-2XE77-QBE-WIFI**	**KIT-2XE79-QBE-WIFI**	**KIT-2XE712-QBE-WIFI**	**KIT-2XE99-QBE-WIFI**
Indoor			**CS-XE7QKEW (x2)**	**CS-XE7QKEW + CS-XE9QKEW**	**CS-XE7QKEW + CS-XE12QKEW**	**CS-XE9QKEW (x2)**
White Kit			**KIT-2E77-QBE**	**KIT-2E79-QBE**	**KIT-2E712-QBE**	**KIT-2E99-QBE**
White Kit with Smartphone Control			**KIT-2E77-QBE-WIFI**	**KIT-2E79-QBE-WIFI**	**KIT-2E712-QBE-WIFI**	**KIT-2E99-QBE-WIFI**
Indoor			**CS-E7QKEW (x2)**	**CS-E7QKEW + CS-E9QKEW**	**CS-E7QKEW + CS-E12QKEW**	**CS-E9QKEW (x2)**
Outdoor			**CU-2E15PBE**	**CU-2E15PBE**	**CU-2E15PBE**	**CU-2E15PBE**
Cooling capacity	Nominal (Min - Max)	kW	4,00 (1,50 - 5,00)	4,50 (1,50 - 5,20)	4,50 (1,50 - 5,20)	4,50 (1,50 - 5,20)
	Nominal (Min - Max)	kCal/h	3.440 (1.290 - 4.300)	3.870 (1.290 - 4.470)	3.870 (1.290 - 4.470)	3.870 (1.290 - 4.470)
SEER	**Nominal**	**Energy Saving**		**6,50 A++**		
Pdesign (cooling)		kW		4,50		
Power input cooling	Nominal (Min - Max)	kW	1,090 (0,250 - 1,350)	1,230 (0,250 - 1,520)	1,230 (0,250 - 1,530)	1,230 (0,250 - 1,520)
Annual electricity consumption (cooling) [1]		kWh/a		242		
Heating capacity	Nominal (Min - Max)	kW	5,40 (1,10 - 7,00)	5,40 (1,10 - 7,00)	5,40 (1,10 - 7,00)	5,40 (1,10 - 7,00)
	Nominal (Min - Max)	kCal/h	4.644 (946 - 6.020)	4.644 (946 - 6.020)	4.644 (946 - 6.020)	4.644 (946 - 6.020)
Heating capacity at -7°C	Nominal	kW	3,54	3,54	3,54	3,54
SCOP	**Nominal**	**Energy Saving**		**4,00 A+**		
Pdesign at -10°C		kW		4,00		
Power input heating	Nominal (Min - Max)	kW	1,170 (0,210 - 1,670)	1,170 (0,210 - 1,670)	1,170 (0,210 - 1,670)	1,170 (0,210 - 1,670)
Annual electricity consumption (heating) [1]		kWh/a		1.400		
Indoor Unit						
Connection		mm^2	4 x 1,5	4 x 1,5	4 x 1,5	4 x 1,5
Current (Nominal)	Cooling / Heating	A	5,10 / 5,20	5,75 / 5,20	5,75 / 5,20	5,75 / 5,20
Air volume	Cooling	m^3/h	(E7) 684	684 (E7) / 702 (E9)	684 (E7) / 732 (E12)	(E9) 702
Moisture removal volume		l/h	1,3 / 1,3	1,3 (E7) / 1,8 (E12)	1,3 (E7) / 1,8 (E12)	1,5 / 1,5
Sound pressure level [2]	Cooling (S-Lo)	dB(A)	(E7) 23	(E7) 23 / (E9) 23	(E7) 23 / (E12) 23	(E9) 23 / (E9) 23
Sound power level	Cooling (S-Lo)	dB	(E7) 56	(E7) 56 / (E9) 56	(E7) 56 / (E12) 60	(E9) 56 / (E9) 56
Dimensions	H x W x D	mm	295 x 870 x 255	295 x 870 x 255	295 x 870 x 255	295 x 870 x 255
Net weight		kg	10	10	10	10
Air purifier filter			Nanoe-G	Nanoe-G	Nanoe-G	Nanoe-G
Outdoor Unit						
Power source		V	230	230	230	230
Recommended fuse		A	16	16	16	16
Recommended power cable section		mm^2	1,5	1,5	1,5	1,5
Air volume	Cooling / Heating	m^3/h	1.962 / 2.214	1.962 / 2.214	1.962 / 2.214	1.962 / 2.214
Sound pressure level [2]	Cooling / Heating (Hi)	dB(A)	47 / 49	47 / 49	47 / 49	47 / 49
Sound power level	Cooling / Heating (Hi)	dB	62 / 64	62 / 64	62 / 64	62 / 64
Dimensions [3]	H x W x D	mm	619 x 824 x 299	619 x 824 x 299	619 x 824 x 299	619 x 824 x 299
Net weight		kg	39	39	39	39
Piping connections	Liquid pipe / Gas pipe	inch (mm)	1/4 (6,35) / 3/8 (9,52)	1/4 (6,35) / 3/8 (9,52)	1/4 (6,35) / 3/8 (9,52)	1/4 (6,35) / 3/8 (9,52)
Refrigerant loading	R410A	kg	1,40	1,40	1,40	1,40
Elevation difference (in/out) [4]	Max	m	10	10	10	10
Piping length (total)	Min / Max	m	3 / 30	3 / 30	3 / 30	3 / 30
Piping length (one unit)	Min / Max	m	3 / 20	3 / 20	3 / 20	3 / 20
Precharge length	Max	m	20	20	20	20
Additional charge		g/m	15	15	15	15
Operating range	Cooling Min / Max	°C	-10 / 46	-10 / 46	-10 / 46	-10 / 46
	Heating Min / Max	°C	-15 / 24	-15 / 24	-15 / 24	-15 / 24

Rating Conditions: Cooling Indoor 27°C DB / 19°C WB. Cooling Outdoor 35°C DB / 24°C WB. Heating Indoor 20°C DB. Heating Outdoor 7°C DB / 6°C WB. (DB: Dry Bulb; WB: Wet Bulb)
Connectivity restriction: CS-E/XE_QKE units are only compatible with CU-2E15PBE, CU-2E18PBE, CU-3E18PBE, CU-4E27PBE and CU-4E27PBE outdoor units. No other outdoor unit can be connected.

1) The annual energy consumption is calculated in accordance with the ErP directive. 2) The Sound pressure level of the units shows the value measured of a position 1 metre in front of the main body and 0,8 m below the unit. The sound pressure is measured in accordance with Eurovent 6/C/006-97 specification. 3) Add 70 mm for piping port. 4) When installing the outdoor unit at a higher position than the indoor unit.
Specifications subject to change without notice.
For detailed information about ErP, please visit our page http://www.ptc.panasonic.eu





Included with the indoor unit

KIT SILVER PLATED: KIT-2XE77-QBE // KIT-2XE79-QBE // KIT-2XE712-QBE // KIT-2XE99-QBE

KIT WHITE: KIT-2E77-QBE // KIT-2E79-QBE // KIT-2E712-QBE // KIT-2E99-QBE

Technical focus

- New! This units can be installed on R22 pipings
- Maximum efficiency and comfort with Econavi, now with sunlight detection
- Nanoe-G air purifying system, 99% effective on both airborne and adhesive mould, viruses and bacteria
- Optional smartphone control
- More powerful airflow to quickly reach the desired temperature

Features

HEALTHY AIR
- Nanoe-G air purifying system

ENERGY, EFFICIENCY AND ECOLOGY
- Maximum efficiency Inverter system, for bigger savings
- -45% consumption with Econavi on heat pump, and -35% on cooling mode
- R410A refrigerant gas

COMFORT
- Powerful mode
- Uniform dispersion of airflow
- Automatic vertical airflow control
- Hot start mode, increased comfort on heat pump mode, no cool airflow when process starts
- Automatic restart after power cut

EASE OF USE
- Real time clock with dual ON&OFF timer
- User friendly infrared remote control
- Optional wired weekly timer with 6 settings per day and 42 settings per week
- Connectivity function (indoor unit equipped with PCB port which can be connected to outside network)
- Optional Smartphone control

EASY INSTALLATION AND MAINTENANCE
- Removable, washable panel
- 30 m maximum connection distance
- 10 m maximum elevation difference
- Maintenance access through the top panel of the outdoor unit
- Self-diagnosis function



CS-E7QKEW // CS-E9QKEW // CS-E12QKEW



CU-2E15PBE

ETHEREA MULTI SPLIT 2x1
INVERTER+

Etherea with enhanced Econavi sensor and new Nanoe-G air-purifying system: outstanding efficiency, comfort and healthy air combined with state-of-the-art design

Econavi features an in-built human activity sensor and a new sunlight detection technology to adjust output thereby giving you the best comfort at anytime whilst saving energy. Econavi not only optimizes air flow orientation and volume according to human presence, it also reduces cooling power automatically by no/less sunshine. With Econavi, energy savings of up to 38% are possible, whilst increasing your comfort.
Furthermore, the Nanoe-G revolutionary air-purifying system utilises nano technology fine particles to remove and deactivate 99% of both airborne and adhesive micro-organisms like bacteria, viruses and mould.
Using a Multi Split 2x1 Inverter+ system with the outdoor unit CU-2E18PBE instead of 2 individual mono split Inverter+ systems, you reduce consumption and thus save more! Up to 16%! Furthermore, using a Multi Split system, you save space on the outdoor unit, making it easier to install in small spaces.

product design award 2013

Awarded with the prestigious IF Design Award 2013



INTERNET CONTROL READY: Optional. SEER and SCOP: For KIT-2XE712-QKE and KIT-2E712-QKE.

Silver Kit			KIT-2XE99-QKE	KIT-2XE712-QKE	KIT-2XE912-QKE	KIT-2XE1212-QKE
Silver Kit with Smartphone Control			KIT-2XE99-QKE-WIFI	KIT-2XE712-QKE-WIFI	KIT-2XE912-QKE-WIFI	KIT-2XE1212-QKE-WIFI
Indoor			CS-XE9QKEW (x2)	CS-XE7QKEW + CS-XE12QKEW	CS-XE9QKEW + CS-XE12QKEW	CS-XE12QKEW (x2)
White Kit			KIT-2E99-QKE	KIT-2E712-QKE	KIT-2E912-QKE	KIT-2E1212-QKE
White Kit with Smartphone Control			KIT-2E99-QKE-WIFI	KIT-2E712-QKE-WIFI	KIT-2E912-QKE-WIFI	KIT-2E1212-QKE-WIFI
Indoor			CS-E9QKEW (x2)	CS-E7QKEW + CS-E12QKEW	CS-E9QKEW + CS-E12QKEW	CS-E12QKEW (x2)
Outdoor			CU-2E18PBE	CU-2E18PBE	CU-2E18PBE	CU-2E18PBE
Cooling capacity	Nominal (Min - Max)	kW	4,80 (1,50 - 5,20)	5,20 (1,50 - 5,40)	5,00 (1,50 - 5,30)	5,20 (1,50 - 5,40)
	Nominal (Min - Max)	kCal/h	4.130 (1.290 - 4.472)	4.472 (1.290 - 4.644)	4.300 (1.290 - 4.560)	4.472 (1.290 - 4.644)
SEER	**Nominal**	**Energy Saving**		**6,50 A++**		
Pdesign (cooling)		kW		5,20		
Power input cooling	Nominal (Min - Max)	kW	1,310 (0,250 - 1,520)	1,520 (0,250 - 1,580)	1,490 (0,250 - 1,540)	1,520 (0,250 - 1,580)
Annual electricity consumption (cooling) [1]		kWh/a		280		
Heating capacity	Nominal (Min - Max)	kW	5,60 (1,10 - 7,20)	5,60 (1,10 - 7,20)	5,60 (1,10 - 7,20)	5,60 (1,10 - 7,20)
	Nominal (Min - Max)	kCal/h	4.820 (950 - 6.190)	4.820 (950 - 6.190)	4.820 (950 - 6.190)	4.820 (950 - 6.190)
Heating capacity at -7°C	Nominal	kW	3,65	3,65	3,65	3,65
SCOP	**Nominal**	**Energy Saving**		**4,00 A+**		
Pdesign at -10°C		kW		3,80		
Power input heating	Nominal (Min - Max)	kW	1,250 (0,210 - 1,740)	1,300 (0,240 - 1,700)	1,230 (0,210 - 1,720)	1,210 (0,210 - 1,700)
Annual electricity consumption (heating) [1]		kWh/a		1400		
Indoor unit						
Connection		mm^2	4 x 1,5	4 x 1,5	4 x 1,5	4 x 1,5
Current (Nominal)	Cooling / Heating	A	6,10 / 5,55	6,10 / 5,45	6,95 / 5,45	7,10 / 5,35
Air volume	Cooling	m^3/h	(E9) 702	684 (E7) / 732 (E12)	684 (E7) / 732 (E12)	732 (E12)
Moisture removal volume		l/h	1,5 / 1,5	1,3 (E7) / 1,8 (E12)	1,3 (E7) / 1,8 (E12)	1,8 (E12)
Sound pressure level [2]	Cooling (S-Lo)	dB(A)	(E9) 23 / (E9) 23	(E7) 23 / (E12) 23	(E7) 23 / (E12) 23	(E12) 23
Sound power level	Cooling (S-Lo)	dB	(E9) 56 / (E9) 56	(E7) 56 / (E12) 60	(E7) 56 / (E12) 60	(E12) 60
Dimensions	H x W x D	mm	295 x 870 x 255	295 x 870 x 255	295 x 870 x 255	295 x 870 x 255
Net weight		kg	10	10	10	10
Air purifier filter			Nanoe-G	Nanoe-G	Nanoe-G	Nanoe-G
Outdoor unit						
Power source		V	230	230	230	230
Recommended fuse		A	16	16	16	16
Recommended power cable section		mm^2	1,5	1,5	1,5	1,5
Air volume	Cooling / Heating	m^3/h	2.217 / 2.466	2.217 / 2.466	2.217 / 2.466	2.217 / 2.466
Sound pressure level [2]	Cooling / Heating (Hi)	dB(A)	49 / 51	49 / 51	49 / 51	49 / 51
Sound power level	Cooling / Heating (Hi)	dB	64 / 66	64 / 66	64 / 66	64 / 66
Dimensions [3]	H x W x D	mm	619 x 824 x 229	619 x 824 x 229	619 x 824 x 229	619 x 824 x 229
Net weight		kg	39	39	39	39
Piping connections	Liquid pipe / Gas pipe	inch (mm)	1/4 (6,35) / 3/8 (9,52)	1/4 (6,35) / 3/8 (9,52)	1/4 (6,35) / 3/8 (9,52)	1/4 (6,35) / 3/8 (9,52)
Refrigerent Loading	R410A	kg	1,40	1,40	1,40	1,40
Elevation difference (in/out) [4]	Max	m	10	10	10	10
Piping length (total)	Max	m	30	30	30	30
Piping length (one unit)	Min / Max	m	3 / 20	3 / 20	3 / 20	3 / 20
Precharge length	Max	m	20	20	20	20
Additional charge		g/m	15	15	15	15
Operating range	Cooling Min / Max	°C	-10 / 46	-10 / 46	-10 / 46	-10 / 46
	Heating Min / Max	°C	-15 / 24	-15 / 24	-15 / 24	-15 / 24

Rating Conditions: Cooling Indoor 27°C DB / 19°C WB. Cooling Outdoor 35°C DB / 24°C WB. Heating Indoor 20°C DB. Heating Outdoor 7°C DB / 6°C WB. (DB: Dry Bulb; WB: Wet Bulb)
Connectivity restriction: CS-E/XE_QKE units are only compatible with CU-2E15PBE, CU-2E18PBE, CU-3E18PBE, CU-4E27PBE and CU-4E27PBE outdoor units. No other outdoor unit can be connected.

1) The annual energy consumption is calculated in accordance with the ErP directive. 2) The Sound pressure level of the units shows the value measured of a position 1 metre in front of the main body and 0,8 m below the unit. The sound pressure is measured in accordance with Eurovent 6/C/006-97 specification. 3) Add 70 mm for piping port. 4) When installing the outdoor unit at a higher position than the indoor unit.
Specifications subject to change without notice.
For detailed information about ErP, please visit our page http://www.ptc.panasonic.eu





Included with the indoor unit

KIT SILVER PLATED: KIT-2XE99-QKE // KIT-2XE712-QKE // KIT-2XE912-QKE // KIT-2XE1212-QKE

KIT WHITE: KIT-2E99-QKE // KIT-2E712-QKE // KIT-2E912-QKE // KIT-2E1212-QKE

Technical focus

- New! This units can be installed on R22 pipings
- Maximum efficiency and comfort with Econavi, now with sunlight detection
- Nanoe-G air purifying system, 99% effective on both airborne and adhesive mould, viruses and bacteria
- Optional smartphone control
- More powerful airflow to quickly reach the desired temperature

Features

HEALTHY AIR
- Nanoe-G air purifying system

ENERGY, EFFICIENCY AND ECOLOGY
- Maximum efficiency Inverter system, for bigger savings
- -45% consumption with Econavi on heat pump, and -35% on cooling mode
- R410A refrigerant gas

COMFORT
- Powerful mode
- Uniform dispersion of airflow
- Automatic vertical airflow control
- Hot start mode, increased comfort on heat pump mode, no cool airflow when process starts
- Automatic restart after power cut

EASE OF USE
- Real time clock with dual ON&OFF timer
- User friendly infrared remote control
- Optional wired weekly timer with 6 settings per day and 42 settings per week
- Connectivity function (indoor unit equipped with PCB port which can be connected to outside network)
- Optional Smartphone control

EASY INSTALLATION AND MAINTENANCE
- Removable, washable panel
- 30 m maximum connection distance
- 10 m maximum elevation difference
- Maintenance access through the top panel of the outdoor unit
- Self-diagnosis function



CS-E7QKEW // CCS-E9QKEW // CS-E12QKEW



CU-2E18PBE

ETHEREA MULTI SPLIT 3x1
INVERTER+

Etherea with enhanced Econavi sensor and new Nanoe-G air-purifying system: outstanding efficiency, comfort and healthy air combined with state-of-the-art design

Econavi features an in-built human activity sensor and a new sunlight detection technology to adjust output thereby giving you the best comfort at anytime whilst saving energy. Econavi not only optimizes air flow orientation and volume according to human presence, it also reduces cooling power automatically by no/less sunshine. With Econavi, energy savings of up to 38% are possible, whilst increasing your comfort.
Furthermore, the Nanoe-G revolutionary air-purifying system utilises nano technology fine particles to remove and deactivate 99% of both airborne and adhesive micro-organisms like bacteria, viruses and mould.
Using a Multi Split 3x1 Inverter+ system with the outdoor unit CU-3E18PBE instead of 3 individual mono split Inverter+ systems, you reduce consumption and thus save more! Up to 34%! Furthermore, using a Multi Split system, you save space on the outdoor unit, making it easier to install in small spaces.

product design award 2013

Awarded with the prestigious IF Design Award 2013



INTERNET CONTROL READY: Optional. SEER and SCOP: For KIT-3E557-QBE.

Silver Kit			—	**KIT-3XE7712-QBE**	—
Silver Kit with Smartphone Control			—	**KIT-3XE7712-QBE-WIFI**	—
Indoor			—	**CS-XE7QKEW (x2) + CS-XE12QKEW (x1)**	—
White Kit			**KIT-3E557-QBE**	**KIT-3E7712-QBE**	**KIT-3E7715-QBE***
White Kit with Smartphone Control			**KIT-3E557-QBE-WIFI**	**KIT-3E7712-QBE-WIFI**	**KIT-3E7715-QBE-WIFI**
Indoor			**CS-ME5PKE (x2) + CS-E7QKEW (x1)**	**CS-E7QKEW (x2) + CS-E12QKEW (x1)**	**CS-E7QKEW (x2) + CS-E15QKEW (x1)**
Outdoor			**CU-3E18PBE**	**CU-3E18PBE**	**CU-3E18PBE**
Cooling capacity	Nominal (Min - Max)	kW	5,20 (1,80 - 7,30)	5,20 (1,90 - 7,20)	5,20 (1,80 - 7,30)
	Nominal (Min - Max)	kCal/h	4.472 (1.548 - 6.278)	4.470 (1.634 - 6.190)	4.472 (1.548 - 6.278)
SEER	**Nominal**	**Energy Saving**	**7,00** A++		
Pdesign (cooling)		kW	5,20		
Power input cooling	Nominal (Min - Max)	kW	1,200 (0,360 - 2,180)	1,210 (0,360 - 2,180)	1,210 (0,360 - 2,180)
Annual electricity consumption (cooling) [1]		kWh/a	260		
Heating capacity	Nominal (Min - Max)	kW	6,80 (1,60 - 8,30)	6,80 (1,40 - 8,30)	6,80 (1,60 - 8,30)
	Nominal (Min - Max)	kCal/h	5.848 (1.376 - 7.138)	5.848 (1.204 - 7.138)	5.848 (1.376 - 7.138)
Heating capacity at -7°C	Nominal	kW	4,90	4,90	4,90
SCOP	**Nominal**	**Energy Saving**	**4,00** A+		
Pdesign at -10°C		kW	4,80		
Power input heating	Nominal (Min - Max)	kW	1,450 (0,320 - 2,110)	1,470 (0,320 - 2,110)	1,440 (0,320 - 2,110)
Annual electricity consumption (heating) [1]		kWh/a	1.680		
Indoor unit					
Connection		mm^2	4 x 1,5	4 x 1,5	4 x 1,5
Current (Nominal)	Cooling / Heating	A	5,3 / 7,9	5,3 / 8,2	5,3 / 7,9
Air volume	Cooling	m^3/h	690 (E5) / 690 (E5) / 714 (E7)	714 (E7) / 714 (E7) / 762 (E12)	714 (E7) / 714 (E7) / 786 (E15)
Moisture removal volume		l/h	1,0 (E5) / 1,0 (E5) / 1,3 (E7)	1,3 (E7) / 1,3 (E7) / 1,8 (E12)	0,8 (E7) / 0,8 (E7) / 2,3 (E15)
Sound pressure level [2]	Cooling (S-Lo)	dB(A)	23 (E5) / 23 (E5) / 23 (E7)	23 (E7) / 23 (E7) / 23 (E12)	23 (E7) / 23 (E7) / 28 (E15)
Sound power level	Cooling (Hi)	dB	56 (E5) / 56 (E5) / 56 (E7)	56 (E7) / 56 (E7) / 60 (E12)	56 (E7) / 56 (E7) / 60 (E15)
Dimensions	H x W x D	mm	295 x 870 x 255	295 x 870 x 255	295 x 870 x 255
Net weight		kg	10	10	10
Air purifier filter			Nanoe-G	Nanoe-G	Nanoe-G
Outdoor unit					
Power source		V	230	230	230
Recommended fuse		A	16	16	16
Recommended power cable section		mm^2	1,5	1,5	1,5
Air volume	Cooling / Heating	m^3/h	2.464 / 2.464	2.464 / 2.464	2.464 / 2.464
Sound pressure level [2]	Cooling / Heating (Hi)	dB(A)	46 / 47	46 / 47	46 / 47
Sound power level	Cooling / Heating (Hi)	dB	60 / 61	60 / 61	60 / 61
Dimensions [3]	H x W x D	mm	795 x 875 (+95) x 320	795 x 875 (+95) x 320	795 x 875 (+95) x 320
Net weight		kg	71	71	71
Piping connections	Liquid pipe / Gas pipe	inch (mm)	1/4 (6,35) / 3/8 (9,52)	1/4 (6,35) / 3/8 (9,52)	1/4 (6,35) / 3/8 (9,52)
Refrigerent Loading	R410A	kg	2,64	2,64	2,64
Elevation difference (in/out) [4]	Max	m	15	15	15
Piping length (total)	Min / Max	m	3 / 50	3 / 50	3 / 50
Piping length (one unit)	Min / Max	m	3 / 25	3 / 25	3 / 25
Precharge length	Max	m	30	30	30
Additional charge		g/m	20	20	20
Operating range	Cooling Min / Max	°C	-10 / 46	-10 / 46	-10 / 46
	Heating Min / Max	°C	-15 / 24	-15 / 24	-15 / 24

Rating Conditions: Cooling Indoor 27°C DB / 19°C WB. Cooling Outdoor 35°C DB / 24°C WB. Heating Indoor 20°C DB. Heating Outdoor 7°C DB / 6°C WB. (DB: Dry Bulb; WB: Wet Bulb)
Connectivity restriction: CS-E/XE_QKE units are only compatible with CU-2E15PBE, CU-2E18PBE, CU-3E18PBE, CU-4E27PBE and CU-4E27PBE outdoor units. No other outdoor unit can be connected.

1) The annual energy consumption is calculated in accordance with the ErP directive. 2) The Sound pressure level of the units shows the value measured of a position 1 metre in front of the main body and 0,8 m below the unit. The sound pressure is measured in accordance with Eurovent 6/C/006-97 specification. 3) Add 70 mm for piping port. 4) When installing the outdoor unit at a higher position than the indoor unit.
Specifications subject to change without notice.
For detailed information about ErP, please visit our page http://www.ptc.panasonic.eu
*CZ-MA1P reduced needed and Not included on the Kit.





Included with the indoor unit

KIT SILVER PLATED: KIT-3XE7712-QBE

KIT WHITE: KIT-3E557-QBE // KIT-3E7712-QBE // KIT-3E7715-QBE

Technical focus

- New! This units can be installed on R22 pipings
- Maximum efficiency and comfort with Econavi, now with sunlight detection
- Nanoe-G air purifying system, 99% effective on both airborne and adhesive mould, viruses and bacteria
- Optional smartphone control
- More powerful airflow to quickly reach the desired temperature

Features

HEALTHY AIR
- Nanoe-G air purifying system

ENERGY, EFFICIENCY AND ECOLOGY
- Maximum efficiency Inverter system, for bigger savings
- -45% consumption with Econavi on heat pump, and -35% on cooling mode
- R410A refrigerant gas

COMFORT
- Powerful mode
- Uniform dispersion of airflow
- Automatic vertical airflow control
- Hot start mode, increased comfort on heat pump mode, no cool airflow when process starts
- Automatic restart after power cut

EASE OF USE
- Real time clock with dual ON&OFF timer
- User friendly infrared remote control
- Optional wired weekly timer with 6 settings per day and 42 settings per week
- Connectivity function (indoor unit equipped with PCB port which can be connected to outside network)
- Optional Smartphone control

EASY INSTALLATION AND MAINTENANCE
- Removable, washable panel
- 50 m maximum connection distance
- 15 m maximum elevation difference
- Maintenance access through the top panel of the outdoor unit
- Self-diagnosis function



CS-ME5PKE // CS-E7QKEW // CS-E12QKEW // CS-E15QKEW



CU-3E18PBE

ETHEREA MULTI SPLIT 4x1 AND 5x1 INVERTER+

Etherea with enhanced Econavi sensor and new Nanoe-G air-purifying system: outstanding efficiency, comfort and healthy air combined with state-of-the-art design

Econavi features an in-built human activity sensor and a new sunlight detection technology to adjust output thereby giving you the best comfort at anytime whilst saving energy. Econavi not only optimizes air flow orientation and volume according to human presence, it also reduces cooling power automatically by no/less sunshine. With Econavi, energy savings of up to 38% are possible, whilst increasing your comfort. Furthermore, the Nanoe-G revolutionary air-purifying system utilises nano technology fine particles to remove and deactivate 99% of both airborne and adhesive micro-organisms like bacteria, viruses and mould. Using a Multi Split 4x1 or 5x1 Inverter+ system with the outdoors units CU-4E23PBE, CU-4E27PBE or CU-5E34PBE instead of 4 or 5 individual mono split Inverter+ systems, you reduce consumption and thus save more! Up to 36%! Furthermore, using a Multi Split system, you save space on the outdoor unit, making it easier to install in small spaces.

product design award 2013

Awarded with the prestigious IF Design Award 2013



INTERNET CONTROL READY: Optional. SEER and SCOP: For KIT-4E5557-QBE, KIT-4XE7777-QKE and KIT-4E7777-QKE.

Silver Kit			—	KIT-4XE77712-QBE	—	KIT-4XE7777-QKE	KIT-4XE77712-QKE*	—	KIT-5XE77777-QBE
Silver Kit with Smartphone Control			—	KIT-4XE77712-QBE-WIFI	—	KIT-4XE7777-QKE-WIFI	KIT-4XE77712-QKE-WIFI	—	KIT-5XE77777-QBE-WIFI
Indoor			—	CS-XE7QKEW (x3) + CS-XE12QKEW (x1)	—	CS-XE7QKEW(x4)	CS-XE7QKEW (x3) + CS-XE12QKEW (x1)	—	CS-XE7QKEW (x5)
White Kit			KIT-4E5557-QBE	KIT-4E77712-QBE	KIT-4E77715-QBE*	KIT-4E7777-QKE	KIT-4E77712-QKE*	KIT-4E77715-QKE*	KIT-5E77777-QBE
White Kit with Smartphone Control			KIT-4E5557-QBE-WIFI	KIT-4E77712-QBE-WIFI	KIT-4E77715-QBE-WIFI	KIT-4E7777-QKE-WIFI	KIT-4E77712-QKE-WIFI	KIT-4E77715-QKE-WIFI	KIT-5E77777-QBE-WIFI
Indoor			CS-ME5PKE (x3) + CS-E7QKEW (x1)	CS-E7QKEW (x3) + CS-E12QKEW (x1)	CS-E7QKEW (x3) + CS-E15QKEW (x1)	CS-E7QKEW(x4)	CS-E7QKEW (x3) + CS-E12QKEW (x1)	CS-E7QKEW (x3) + CS-E15QKEW (x1)	CS-E7QKEW (x5)
Outdoor			CU-4E23PBE	CU-4E23PBE	CU-4E23PBE	CU-4E27PBE	CU-4E27PBE	CU-4E27PBE	CU-5E34PBE
Cooling capacity	Nominal (Min-Max)	kW	6,80 (1,90 - 8,80)	6,80 (1,90 - 8,80)	6,80 (1,90 - 8,80)	8,00 (3,00 - 9,20)	8,00 (2,80 - 8,90)	8,00 (2,80 - 8,90)	10,00 (2,90 - 11,50)
	Nominal (Min-Max)	kCal/h	5.850 (1.630 - 7.570)	5.850 (1.630 - 7.570)	5.850 (1.630 - 7.650)	6.880 (2.580 - 7.912)	6.880 (2.410 - 7.650)	6.880 (2.410 - 7.650)	8.600 (2.494 - 9.890)
SEER	**Nominal**	**Energy Saving**	**7,00 A++**			**7,00 A++**			**6,50 A++**
Pdesign (cooling)		kW	6,80			8,00			10,00
Power input cooling	Nominal (Min-Max)	kW	1,680 (0,340 - 2,470)	1,640 (0,340 - 2,330)	1,640 (0,340 - 2,330)	1,980 (0,530 - 2,870)	2,130 (0,490 - 2,880)	2,100 (0,490 - 2,870)	2,860 (0,550 - 3,860)
Annual electricity consumption (cooling) [1]		kWh/a	340			412			538
Heating capacity	Nominal (Min-Max)	kW	8,50 (3,00 - 10,60)	8,50 (3,00 - 10,60)	8,50 (3,00 - 10,60)	9,40 (4,20 - 10,60)	9,40 (3,40 - 10,50)	9,40 (3,80 - 10,50)	12,00 (3,40 - 14,50)
	Nominal (Min-Max)	kCal/h	7.130 (2.580 - 9.120)	7.130 (2.580 - 9.120)	7.130 (2.580 - 9.120)	8.084 (3.612 - 9.116)	8.080 (2.920 - 9.030)	8.080 (3.270 - 9.030)	10.320 (2.924 - 12.470)
Heating capacity at -7°C	Nominal	kW	6,05	6,05	6,05	7,08	7,08	7,08	8,85
SCOP	**Nominal**	**Energy Saving**	**4,00 A+**			**4,00 A+**			**4,00 A+**
Pdesign at -10°C		kW	5,50			8,00			10,00
Power input heating	Nominal (Min-Max)	kW	1,900 (0,580 - 2,600)	1,860 (0,610 - 2,550)	1,850 (0,610 - 2,540)	2,080 (0,700 - 3,060)	2,120 (0,590 - 3,180)	2,090 (0,640 - 3,140)	2,860 (0,530 - 4,240)
Annual electricity consumption (heating) [1]		kWh/a	1925			2667			3.500
Indoor unit									
Connection		mm²	4 x 1,5	4 x 1,5	4 x 1,5	4 x 1,5	4 x 1,5	4 x 1,5	4 x 1,5
Current	Cool / Heat	A	7,6 / 8,8	7,3 / 8,6	7,3 / 8,5	9,4 / 9,8	9,1 / 9,8	9,1 / 9,7	13,2 / 13,4
Air volume	Cool	m³/h	690 (E5) / 714 (E7)	714 (E7) / 762 (E12)	714 (E7) / 786 (E15)	714 (E7)	714 (E7) / 762 (E12)	714 (E7) / 786 (E15)	690
Moisture removal volume		l/h	1 (E5) / 1,3 (E17)	1,3 (E7) / 1,8 (E12)	0,8 (E7) / 2,3 (E15)	1,3 (E7)	1,3 (E7) / 1,8 (E12)	1,3 (E7) / 2,3 (E15)	1,3
Sound pressure level [2]	Cool & Heat (S-Lo)	dB(A)	23	23	23 (E7) / 28 (E15)	23	23	23 (E7) / 28 (E15)	23
Sound power level	Cool & Heat (Hi)	dB	56	56	56	56	56	56	56
Dimensions / Net weight	H x W x D	mm	295 x 870 x 255 / 10	295 x 870 x 255 / 10	295 x 870 x 255 / 10	295 x 870 x 255 / 9	295 x 870 x 255 / 9	295 x 870 x 255 / 9	295 x 870 x 255 / 9
Air purifier filter			Nanoe-G	Nanoe-G	Nanoe-G	Nanoe-G	Nanoe-G	Nanoe-G	Nanoe-G
Outdoor unit									
Power source		V	230	230	230	230	230	230	230
Recommended fuse		A	20	20	20	20	20	20	25
Recommended power cable section		mm²	2,5	2,5	2,5	2,5	2,5	2,5	3,5
Air volume	Cool / Heat	m³/h	2.550	2.550	2.550	3.024 / 3.336	3.024 / 3.336	3.024 / 3.336	3.648 / 4.206
Sound pressure level [2]	Cool / Heat (Hi)	dB(A)	48 / 49	48 / 49	48 / 49	51 / 52	51 / 52	51 / 52	53 / 54
Sound power level	Cool / Heat (Hi)	dB	62 / 63	62 / 63	62 / 63	67 / 68	67 / 68	67 / 68	69 / 70
Dimensions [3]	H x W x D	mm	795 x 875 (+95) x 320	795 x 875 (+95) x 320	795 x 875 (+95) x 320	999 x 940 x 340	999 x 940 x 340	999 x 940 x 340	999 x 940 x 340
Net weight		kg	72	72	72	80	80	80	81
Piping connections	Liquid pipe	inch (mm)	1/4 (6,35)	1/4 (6,35)	1/4 (6,35)	1/4 (6,35)	1/4 (6,35)	1/4 (6,35)	1/4 (6,35)
	Gas pipe	inch (mm)	2x 3/8 (9,52) , 2x 1/2 (12,7)	2x 3/8 (9,52) , 2x 1/2 (12,7)	2x 3/8 (9,52) , 2x 1/2 (12,7)	2x 3/8 (9,52), 2x 1/2 (12,7)	2x 3/8 (9,52), 2x 1/2 (12,7)	2x 3/8 (9,52), 2x 1/2 (12,7)	3/8 (9,52)
Refrigerent Loading	R410A	kg	2,64	2,64	2,64	3,4	3,4	3,4	3,4
Elevation dif. (in/out) [4]	Max	m	15	15	15	15	15	15	15
Piping length total (1 unit)	Max (Min / Max)	m	60 (3 / 25)	60 (3 / 25)	60 (3 / 25)	70 (3 / 25)	70 (3 / 25)	70 (3 / 25)	80 (3 / 25)
Precharge length	Max	m	30	30	30	45	45	45	45
Additional charge		g/m	20	20	20	20	20	20	20
Operating range	Cool Min / Max	°C	-10 / 46	-10 / 46	-10 / 46	-10 / 46	-10 / 46	-10 / 46	-10 / 46
	Heat Min / Max	°C	-15 / 24	-15 / 24	-15 / 24	-15 / 24	-15 / 24	-15 / 24	-15 / 24

Rating Conditions: Cooling Indoor 27°C DB / 19°C WB. Cooling Outdoor 35°C DB / 24°C WB. Heating Indoor 20°C DB. Heating Outdoor 7°C DB / 6°C WB. (DB: Dry Bulb; WB: Wet Bulb)

1) The annual energy consumption is calculated in accordance with the ErP directive. 2) The Sound pressure level of the units shows the value measured of a position 1 metre in front of the main body and 0,8 m below the unit. The sound pressure is measured in accordance with Eurovent 6/C/006-97 specification. 3) Add 70 mm for piping port. 4) When installing the outdoor unit at a higher position than the indoor unit.
Specifications subject to change without notice.
For detailed information about ErP, please visit our page http://www.ptc.panasonic.eu
*CZ-MA1P reduced needed and Not included on the Kit.



Included with the indoor unit

KIT SILVER PLATED: KIT-4XE77712-QBE // KIT-4XE7777-QKE // KIT-4XE77712-QKE

KIT WHITE: KIT-4E5557-QBE // KIT-4E77712-QBE // KIT-4E77715-QBE // KIT-4E7777-QKE // KIT-4E77712-QKE // KIT-4E77715-QKE

5x1 KIT SILVER PLATED: KIT-5XE77777-QBE

5x1 KIT WHITE: KIT-5E77777-QBE

Technical focus

- **New!** This units can be installed on R22 pipings
- Maximum efficiency and comfort with Econavi, now with sunlight detection
- Nanoe-G air purifying system, 99% effective on both airborne and adhesive mould, viruses and bacteria
- Optional smartphone control
- More powerful airflow to quickly reach the desired temperature

Features

HEALTHY AIR
- Nanoe-G air purifying system

ENERGY, EFFICIENCY AND ECOLOGY
- Maximum efficiency Inverter system, for bigger savings
- -45% consumption with Econavi on heat pump, and -35% on cooling mode
- R410A refrigerant gas

COMFORT
- Powerful mode
- Uniform dispersion of airflow
- Automatic vertical airflow control
- Hot start mode, increased comfort on heat pump mode, no cool airflow when process starts
- Automatic restart after power cut

EASE OF USE
- Real time clock with dual ON&OFF timer
- User friendly infrared remote control
- Optional wired weekly timer with 6 settings per day and 42 settings per week
- Connectivity function (indoor unit equipped with PCB port which can be connected to outside network)
- Optional Smartphone control

EASY INSTALLATION AND MAINTENANCE
- Removable, washable panel
- 70 m maximum connection distance
- 15 m maximum elevation difference
- Maintenance access through the top panel of the outdoor unit
- Self-diagnosis function



CS-ME5PKE // CS-E7QKEW // CS-E12QKEW // CS-E15QKEW



CU-4E23PBE



CU-4E27PBE CU-5E34PBE

FREE MULTI SYSTEM

Up to 5 indoor units with a single outdoor unit

Connect up to five different rooms with a single outdoor unit using the Free Multi system.
With Free Multi you can take care of 2, 3, 4 or 5 rooms with a single outdoor unit.
With the Free Multi range, your clients will be able to save space at the time of installing the outdoor unit, and they will have more energy efficiency than with conventional 1x1 systems. They will be able to achieve energy savings of up to 30%.
Choose the indoor units according to the individual requirements of each of your client's rooms, and calculate which outdoor unit best adapts itself to the combinations of indoor units.
The combination table will help you to select the best option.



INTERNET CONTROL READY and EASY CONTROL by BMS: Optional only for Etherea, Low Static Pressure Hide Away (CS-E9PD3EA and CS-E12PD3EA) and 4 Way 60x60 Cassette (CS-E9PB4EA and CS-E12PB4EA).

Possible outdoor/indoor units combinations

	Models	Capacity connected (Min-Max)	Piping connections		Pipe length					Capacity combinations	Indoor Unit Capacities								
			Liquid pipe (Inch)	Gas pipe (Inch)	Max. pipe length (1 room)	Max. pipe length (total)	Precharge length	Additional charge	Elevation difference (in/out)		5 1,6 kW	7 2,0 kW	9 2,5 kW	9 2,8 kW	12 3,2 kW	15 4,0 kW	18 5,0 kW	21 6,8 kW	24 7,1 kW
2 ROOMS	CU-2E15PBE 	3,2-5,6 kW	1/4	3/8	20 m	30 m	20 m	15 g/m	10 m	For 2 indoor units	✔	✔	✔	✔	✔				
2 ROOMS	CU-2E18PBE 	3,2-6,4 kW	1/4	3/8	20 m	30 m	20 m	15 g/m	10 m	For 2 indoor units	✔	✔	✔	✔	✔				
3 ROOMS	CU-3E18PBE 	4,5-9,0 kW	1/4	3/8	25 m	50 m	30 m	20 g/m	15 m	For 3 indoor units	✔	✔	✔	✔	✔	✔	✔		
4 ROOMS	CU-4E23PBE 	4,5-11,0 kW	1/4	3/8	25 m	60 m	30 m	20 g/m	15 m	For 4 indoor units	✔	✔	✔	✔	✔	✔	✔	✔	
4 ROOMS	CU-4E27PBE 	4,5-13,6 kW	1/4	3/8	25 m	70 m	45 m	20 g/m	15 m	For 4 indoor units	✔	✔	✔	✔	✔	✔	✔	✔	✔
5 ROOMS	CU-5E34PBE 	4,5-17,5 kW	1/4	3/8	25 m	80 m	45 m	20 g/m	15 m	For 5 indoor units	✔	✔	✔	✔	✔	✔	✔	✔	✔

1) At least two indoor units must be connected.
2) The total nominal cooling capacity of indoor units that will be connected to outdoor unit must be within connectable capacity range of indoor unit.



Indoor Unit Capacities				
Capacity	**Split Etherea**	**Floor Console**	**Low Static Pressure Hide Away**	**4 Way 60x60 Cassette**
5 - 1,6 kW	 CS-ME5PKE			
7 - 2,0 kW	 CS-XE7QKEW / CS-E7QKEW			
9 - 2,5 kW (9 - 2,8 kW for Floor Console only)	 CS-XE9QKEW / CS-E9QKEW	 CS-E9GFEW	 CS-E9PD3EA	 CS-E9PB4EA
12 - 3,2 kW	 CS-XE12QKEW / CS-E12QKEW	 CS-E12GFEW	 CS-E12PD3EA[1]	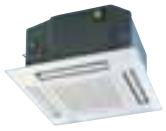 CS-E12PB4EA[1]
15 - 4,0 kW	 CS-E15QKEW[1]			
18 - 5,0 kW	 CS-XE18QKEW[1] / CS-E18QKEW[1]	 CS-E18GFEW[1]	 CS-ME18PD3EA	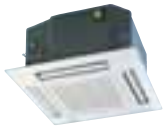 CS-ME18PB4EA[1]
21 - 6,8 kW	 CS-E21QKEW[1]			 CS-ME21PB4EA[1]
24 - 7,1 kW	 CS-E24QKEW[1]			

1) A CZ-MA1P pipe reducer is needed on the E15 and E18, a CZ-MA2P pipe expander is needed on the E21. And a CZ-MA2P pipe expander plus a CZ-MA3P pipe reducer are needed on the E24.
* At least two indoor units must be connected.

Indoor Units for Free Multi combinations







Optional wired remote control
CZ-RD514C



INTERNET CONTROL READY: Optional.

Etherea // Silver or White			1,6 kW	2,0 kW	2,5 kW	3,2 kW	4,0 kW	5,0 kW	6,8 kW	7,1 kW
Silver Indoor			—	CS-XE7QKEW	CS-XE9QKEW	CS-XE12QKEW	—	CS-XE18QKEW	—	—
White Indoor			CS-ME5PKE*	CS-E7QKEW	CS-E9QKEW	CS-E12QKEW	CS-E15QKEW	CS-E18QKEW	CS-E21QKEW	CS-E24QKEW
Cooling capacity	Nominal	kW/kCal/h	1,6 / 1.380	2,00 / 1.720	2,50 / 2.150	3,20 / 2.750	4,00 / 3.440	5,00 / 4.300	6,00 / 5.160	7,65 / 6.580
Heating capacity	Nominal	kW/kCal/h	2,6 / 2.240	3,20 / 2.750	3,60 / 3.010	4,50 / 3.870	5,60 / 4.820	6,80 / 5.850	8,50 / 7.310	9,60 / 8.260
Connection		mm²	4 x 1,5	4 x 1,5	4 x 1,5	4 x 1,5	4 x 1,5	4 x 1,5	4 x 1,5	4 x 1,5
Sound pressure level[1]	Cooling (Hi / Lo / S-Lo)	dB(A)	39 / 29 / 23	40 / 26 / 23	40 / 26 / 23	44 / 32 / 26	44 / 32 / 26	46 / 33 / 30	46 / 33 / 30	49 / 38 / 35
	Heating (Hi / Lo / S-Lo)	dB(A)	39 / 29 / 23	40 / 26 / 23	40 / 26 / 23	44 / 32 / 26	44 / 33 / 32	46 / 35 / 32	46 / 35 / 32	48 / 38 / 35
Sound power level	Cooling (Hi)	dB	55	54	56	60	60	62	62	65
	Heating (Hi)	dB	55	56	56	60	60	62	62	64
Dimensions	H x W x D	mm	295 x 870 x 255	295 x 870 x 255	295 x 870 x 255	295 x 870 x 255	295 x 870 x 255	290 x 1.070 x 255	290 x 1.070 x 255	290 x 1.070 x 255
Net weight		kg	9	9	9	9	9	12	12	12
Air purifier filter			Nanoe-G	Nanoe-G	Nanoe-G	Nanoe-G	Nanoe-G	Nanoe-G	Nanoe-G	Nanoe-G
Piping connections	Liquid pipe	inch (mm)	1/4 (6,35)	1/4 (6,35)	1/4 (6,35)	1/4 (6,35)	1/4 (6,35)	1/4 (6,35)	1/4 (6,35)	1/4 (6,35)
	Gas pipe	inch (mm)	3/8 (9,52)	3/8 (9,52)	3/8 (9,52)	3/8 (9,52)	1/2 (12,70)	1/2 (12,70)	1/2 (12,70)	5/8 (15,88)

* NEW also for the 4x1 and 5x1.





Include on the indoor unit



Optional wired remote control
CZ-RD52CP



Panel
CZ-BT20E (sold separately)

INTERNET CONTROL READY and EASY CONTROL by BMS: Optional only for E9 and E12. OPTIONAL: CZ-SA22P.

4 Way 60x60 Cassette			2,5 kW	3,2 kW	5,0 kW	6,0 kW
Indoor			CS-E9PB4EA	CS-E12PB4EA	CS-ME18PB4EA	CS-ME21PB4EA
Panel			CZ-BT20E	CZ-BT20E	CZ-BT20E	CZ-BT20E
Cooling capacity	Nominal	kW / kCal/h	2,50 / 2.150	3,4 / 2.920	5,00 / 4.300	6,00 / 5.160
Heating capacity	Nominal	kW / kCal/h	3,20 / 2.752	4,5 / 3.870	6,80 / 5.850	8,50 / 7.310
Connection		mm²	4 x 1,5 to 2,5	4 x 1,5 to 2,5	4 x 1,5	4 x 1,5
Sound pressure level[1]	Cooling (Hi / Lo / S-Lo)	dB(A)	34 / 26 / 23	34 / 26 / 23	36 / 28 / 25	41 / 33 / 30
	Heating (Hi / Lo / S-Lo)	dB(A)	35 / 28 / 25	35 / 28 / 25	37 / 29 / 26	42 / 34 / 31
Sound power level	Cooling (Hi)	dB	50	50	49	54
	Heating (Hi)	dB	51	51	50	55
Dimensions (H x W x D)	Indoor	mm	260 x 575 x 575	260 x 575 x 575	260 x 575 x 575	260 x 575 x 575
	Panel	mm	51 x 700 x 700	51 x 700 x 700	51 x 700 x 700	51 x 700 x 700
Net weight	Indoor / Panel	kg	18 / 2,5	18 / 2,5	18 (2,5)	18 (2,5)
Antiallergic filter	Optional		CZ-SA22P	CZ-SA22P	CZ-SA22P	CZ-SA22P
Piping connections	Liquid pipe	Inch (mm)	1/4 (6,35)	1/4 (6,35)	1/4 (6,35)	1/4 (6,35)
	Gas pipe	Inch (mm)	3/8 (9,52)	1/2 (12,70)	1/2 (12,70)	1/2 (12,70)





Floor Console			2,8 kW	3,2 kW	5,0 kW
Indoor			CS-E9GFEW	CS-E12GFEW	CS-E18GFEW
Cooling capacity	Nominal	kW/kCal/h	2,80 / 2.410	3,20 / 2.750	5,00 / 4.300
Heating capacity	Nominal	kW/kCal/h	4,00 / 3.440	4,50 / 3.870	6,80 / 5.850
Connection		mm²	4 x 1,5	4 x 1,5	4 x 1,5
Sound pressure level[1]	Cooling (Hi / Lo / S-Lo)	dB(A)	38 / 27 / 23	39 / 28 / 24	44 / 36 / 32
	Heating (Hi / Lo / S-Lo)	dB(A)	38 / 27 / 23	39 / 27 / 23	46 / 36 / 32
Sound power level	Cooling (Hi)	dB	54	55	60
	Heating (Hi)	dB	54	55	62
Dimensions	H x W x D	mm	600 x 700 x 210	600 x 700 x 210	600 x 700 x 210
Net weight		kg	14	14	14
Piping connections	Liquid pipe	inch (mm)	1/4 (6,35)	1/4 (6,35)	1/4 (6,35)
	Gas pipe	inch (mm)	3/8 (9,52)	3/8 (9,52)	1/2 (12,70)

Outdoor Multi combination model		Accessory needed
CS-XE7***	CU-2E15***	—
CS-E7***	CU-2E18***	
CS-XE9***	CU-3E18***	
CS-E9***	CU-4E23***	
CS-XE12***	CU-4E27***	
CS-E12***	CU-5E34***	
CS-E15***	CU-3E18***	CZ-MA1P
CS-XE18***	CU-4E23***	
CS-E18***	CU-4E27***	
	CU-5E34***	
CS-E21***	CU-4E23***	CZ-MA2P
	CU-4E27***	
	CU-5E34***	
CS-E24***	CU-4E27***	CZ-MA2P and CZ-MA3P
	CU-5E34***	



CZ-MA1P is to be used to reduce the connection size on the indoor unit from 1/2" to 3/8".
CZ-MA2P is to be used to increase the connection size on the outdoor unit from 3/8" to 1/2".
CZ-MA3P is to be used to reduce the connection size on the indoor unit from 5/8" to 1/2".

Rating Conditions: Cooling Indoor 27°C DB / 19°C WB. Cooling Outdoor 35°C DB / 24°C WB. Heating Indoor 20°C DB. Heating Outdoor 7°C DB / 6°C WB. (DB: Dry Bulb; WB: Wet Bulb)

1) The Sound pressure level of the units shows the value measured of a position 1 metre in front of the main body. The sound pressure is measured in accordance with Eurovent 6/C/006-97 specification. 2) The specification listed on the table indicates values under the condition of 29 Pa (3,0 mmAq) which are applied for factory default setting. Change switch on PCB from Hi to Shi to have more than 6,0 mmAq.
Specifications subject to change without notice.





Include on the indoor unit

INTERNET CONTROL READY and EASY CONTROL by BMS: Optional only for E9 and E12.

Low Static Pressure Hide Away			2,5 kW	3,2 kW	5,0 kW
Indoor			**CS-E9PD3EA**	**CS-E12PD3EA**	**CS-ME18PD3EA**
Cooling capacity	Nominal	kW / kCal/h	2,50 / 2.150	3,4 / 2.920	5,00 / 4.300
Heating capacity	Nominal	kW / kCal/h	3,20 / 2.752	4,00 / 3.440	6,80 / 5.850
Connection		mm²	4 x 1,5 to 2,5	4 x 1,5 to 2,5	4 x 1,5
External static pressure[2]	S-Hi / Hi / Me / Lo	Pa	110 / 60 / 30 / 20	80 / 50 / 25 / 10	34 / 78 (3,47 / 7,95)
Air volume	Cooling / Heating	m³/h	414 / 486	540 / 630	624 / 528 / 444
Sound pressure level[1]	Cooling (Hi / Lo / S-Lo)	dB(A)	33 / 27 / 24	33 / 27 / 24	27 / 30 / 41
	Heating (Hi / Lo / S-Lo)	dB(A)	35 / 28 / 25	35 / 28 / 25	29 / 32 / 41
Sound power level	Cooling (Hi)	dB	49	49	57
	Heating (Hi)	dB	51	51	57
Dimensions	H x W x D	mm	235 x 750 x 370	285 x 750 x 370	285 x 750 (+65) x 370
Net weight		kg	17	17	18
Piping connections	Liquid / Gas pipe	Inch (mm)	1/4 (6,35	1/4 (6,35)	1/4 (6,35)
	Liquid / Gas pipe	Inch (mm)	3/8 (9,52)	3/8 (9,52)	1/2 (12,70)

Outdoor Units for Free Multi combinations

5 year compressor warranty


CU-2E15PBE


CU-2E18PBE


CU-3E18PBE


CU-4E23PBE


CU-4E27PBE


CU-5E34PBE

Energy saving INVERTER+ | 7,00 A++ SEER SEASONAL ENERGY EFFICIENCY RATIO | 4,00 A+ SCOP SEASONAL COEFFICIENT OF PERFORMANCE | Down to -15°C in heating mode OUTDOOR TEMPERATURE | Possible to use on R22 pipings R22 RENEWAL

Outdoor Unit //Inverter+			3,2 to 5,6 kW	3,2 to 6,4 kW	4,5 to 9,0 kW	4,5 to 11,0 kW	4,5 to 13,6 kW	4,5 to 17,5 kW
Unit			**CU-2E15PBE**	**CU-2E18PBE**	**CU-3E18PBE**	**CU-4E23PBE**	**CU-4E27PBE**	**CU-5E34PBE**
Cooling capacity	Nominal (Min - Max)	kW	4,50 (1,50 - 5,20)	5,20 (1,50 - 5,40)	5,20 (1,80-7,30)	6,80 (1,90 - 8,80)	8,00 (3,00 - 9,20)	10,00 (2,9 - 11,5)
	Nominal (Min - Max)	kCal/h	3.870 (1.290 - 4.470)	4.472 (1.290 - 4.644)	4.470 (1.548-6.278)	5.850 (1.630 - 7.570)	6.880 (2.580 - 7.912)	8.600 (2.494 - 9.890)
SEER	**Nominal**	**W/W**	**6,50** A++	**6,50** A++	**7,00** A++	**7,00** A++	**7,00** A++	**6,50** A++
Pdesign (cooling)			**4,50**	**5,20**	**5,20**	**6,80**	**8,00**	**10,00**
Power input cooling	Nominal (Min - Max)	kW	1,230 (0,250 - 1,520)	1,490 (0,250 - 1,540)	1,210 (0,360-2,180)	1,680 (0,340 - 2,470)	1,980 (0,530 - 2,870)	2,860 (0,550 - 3,860)
Annual electricity consumption (cooling)		kW	242	280	260	340	400	538
Heating capacity	Nominal (Min - Max)	kWh/a	5,40 (1,10 - 7,00)	5,60 (1,10 - 7,20)	6,80 (1,60-8,30)	8,50 (3,00 - 10,60)	9,40 (4,20 - 10,60)	12,00 (3,40 - 14,50)
	Nominal (Min - Max)	kCal/h	4.640 (950 - 6.020)	4.820 (950 - 6.190)	5.850 (1.200-7.140)	7.130 (2.580 - 9.120)	8.084 (3.612 - 9.116)	10.320 (2.924 - 12.470)
Heating capacity at -7°C	Nominal	kW	3,54	3,65	4,90	6,05	7,08	8,85
SCOP	**Nominal**	**W/W**	**4,00** A+	**4,00** A+	**4,00** A+	**4,00** A+	**4,00** A+	**4,00** A+
Pdesign at -10°C		**kW**	**4,00**	**3,80**	**4,80**	**5,50**	**8,00**	**10,00**
Power input heating	Nominal (Min - Max)	kW	1,170 (0,210 - 1,670)	1,300 (0,240 - 1,700)	1,450 (0,320 - 2,110)	1,850 (0,580 - 2,600)	2,080 (0,700 - 3,060)	2,860 (0,530 - 4,240)
Annual electricity consumption (heating)		kWh/a	1.400	1.330	1.680	1.925	2.800	3.500
Current	Cooling	A	5,75	7,10	5,30	7,50	9,40	13,20
	Heating	A	5,20	5,35	6,70	8,80	9,80	13,40
Power source		V	230	230	230	230	230	230
Recommended fuse		A	16	16	16	20	20	25
Recommended power cable section		mm²	1,5	1,5	2,5	2,5	2,5	3,5
Sound pressure level[1]	Cooling / Heating (Hi)	dB(A)	47 / 49	49 / 51	46 / 47	48 / 49	51 / 52	53 / 54
Sound power level	Cooling / Heating (Hi)	dB	62 / 64	64 / 66	60 / 61	62 / 63	67 / 68	69 / 70
Dimensions	H x W x D	mm	619 x 824 +70 x 299	619 x 824 x 229	795 x 875 (+95) x 320	795 x 875 (+95) x 320	999 x 940 x 340	999 x 940 x 340
Net weight		kg	39	39	71	72	80	81
Piping connections	Liquid pipe	inch (mm)	1/4 (6,35)	1/4 (6,35)	1/4 (6,35)	1/4 (6,35)	1/4 (6,35)	1/4 (6,35)
	Gas pipe	inch (mm)	3/8 (9,52)	3/8 (9,52)	3/8 (9,52)	3/8 (9,52)	3/8 (9,52)	3/8 (9,52)
Refrigerant loading	R410A	kg	1,40	1,40	2,64	2,64	3,4	3,4
Elevation diff. (in/out)	Max	m	10	10	15	15	15	15
Piping length total	Min / Max	m	3 / 30	3 / 30	3 / 50	60	80	80
Piping length to one unit	Min / Max	m	3 / 20	3 / 20	3 / 25	3 / 25	3 / 25	3 / 25
Precharge length		m (Max)	20	20	30	30	45	45
Additional charge		g/m	15	15	20	20	20	20
Operating range	Cooling Min/Max	°C	-10 / +46	-10 / +46	-10 / +46	-10 / +46	-10 / +46	-10 / +46
	Heating Min/Max	°C	-15 / +24	-15 / +24	-15 / +24	-15 / +24	-15 / +24	-15 / +24

For detailed information about ErP, please visit our page http://www.ptc.panasonic.eu

Free Multi combinations table

Free Multi 2x1 CU-2E15PBE. Minimum capacity connected: 3,2 kW. Maximum capacity connected: 5,6 kW

Indoor unit capacity	Cooling capacity (kW)			EER	SEER	Pdesign	Input power rating	Annual consumption	Current	Moisture removal	Heating capacity (kW)			COP	SCOP	Pdesign at -10°C	Input power rating	Annual consumption	Current
	Room A	Room B	Total (Min - Max)	W/W	W/W	kWh	W	kWh	230V (A)	Volume (l/h)	Room A	Room B	Total (Min - Max)	W/W	W/W	kWh	W	kWh	230V (A)
1 Room																			
5	1,60		1,60 (1,10 - 2,30)	3,90 A			410 (220 - 600)	205	1,95	1,0	2,60		2,60 (0,70 - 3,80)	3,77 A			690 (170 - 1.110)	345	3,05
7	2,00		2,00 (1,10 - 2,90)	3,85 A			520 (220 - 750)	260	2,45	1,3	3,20		3,20 (0,70 - 4,80)	3,76 A			850 (170 - 1.410)	425	3,75
9[1]	2,50		2,50 (1,10 - 3,50)	3,73 A			670 (220 - 1.000)	335	3,15	1,5	3,60		3,60 (0,70 - 5,50)	3,50 B			1.030 (170 - 1.700)	515	4,55
9[2]	2,80		2,80 (1,10 - 3,50)	3,73 A			750 (220 - 1.000)	375	3,50	1,6	4,00		4,00 (0,70 - 5,50)	3,48 B			1.150 (170 - 1.700)	575	5,10
12	3,20		3,20 (1,10 - 4,00)	3,48 A			920 (220 - 1.220)	460	4,30	1,8	4,50		4,50 (0,70 - 6,20)	3,60 B			1.250 (170 - 1.810)	625	5,55
2 Rooms																			
5 + 5	1,60	1,60	3,20 (1,50 - 4,00)	3,76 A			850 (250 - 1.100)	425	4,00	1,0 + 1,0	2,60	2,60	5,40 (1,10 - 7,00)	4,60 A			1.130 (210 - 1.710)	565	5,00
5 + 7	1,60	2,00	3,60 (1,50 - 4,50)	3,71 A			970 (250 - 1.280)	485	4,55	1,0 + 1,3	2,40	3,00	5,40 (1,10 - 7,00)	4,58 A			1.180 (210 - 1.690)	590	5,25
5 + 9[1]	1,60	2,50	4,10 (1,50 - 5,10)	3,63 A			1.130 (250 - 1.480)	565	5,30	1,0 + 1,5	2,11	3,29	5,40 (1,10 - 7,00)	4,58 A			1.180 (210 - 1.690)	590	5,25
5 + 9[2]	1,60	2,80	4,40 (1,50 - 5,20)	3,61 A			1.220 (250 - 1.520)	610	5,70	1,0 + 1,6	1,96	3,44	5,40 (1,10 - 7,00)	4,58 A			1.180 (210 - 1.690)	590	5,25
5 + 12	1,50	3,00	4,50 (1,50 - 5,20)	3,66 A			1.230 (250 - 1.520)	615	5,75	1,0 + 1,7	1,80	3,60	5,40 (1,10 - 7,00)	4,58 A			1.180 (210 - 1.690)	590	5,25
7 + 7	2,00	2,00	4,00 (1,50 - 5,00)	3,67 A			1.090 (250 - 1.460)	545	5,10	1,3 + 1,3	2,70	2,70	5,40 (1,10 - 7,00)	4,62 A			1.170 (210 - 1.670)	585	5,20
7 + 9[1]	2,00	2,50	4,50 (1,50 - 5,20)		6,50 A+++[3]	4,50	1.230 (250 - 1.520)	242	5,75	1,3 + 1,5	2,40	3,00	5,40 (1,10 - 7,00)		4,00 A+[3]	4,00	1.170 (210 - 1.670)	1.400	5,20
7 + 9[2]	1,85	2,65	4,50 (1,50 - 5,20)	3,66 A			1.230 (250 - 1.520)	615	5,75	1,2 + 1,6	2,25	3,15	5,40 (1,10 - 7,00)	4,62 A			1.170 (210 - 1.670)	585	5,20
7 + 12	1,75	2,75	4,50 (1,50 - 5,20)	3,66 A			1.230 (250 - 1.520)	615	5,75	1,1 + 1,6	2,10	3,30	5,40 (1,10 - 7,00)	4,62 A			1.170 (210 - 1.670)	585	5,20
9[1] + 9[1]	2,25	2,25	4,50 (1,50 - 5,20)		6,50 A+++[3]	4,50	1.230 (250 - 1.520)	242	5,75	1,5 + 1,5	2,70	2,70	5,40 (1,10 - 7,00)		4,00 A+[3]	4,00	1.170 (210 - 1.670)	1.400	5,20
9[1] + 9[2]	2,10	2,40	4,50 (1,50 - 5,20)	3,66 A			1.230 (250 - 1.520)	615	5,75	1,4 + 1,5	2,55	2,85	5,40 (1,10 - 7,00)	4,62 A			1.170 (210 - 1.670)	585	5,20
9[2] + 9[2]	2,25	2,25	4,50 (1,50 - 5,20)	3,66 A			1.230 (250 - 1.520)	615	5,75	1,5 + 1,5	2,70	2,70	5,40 (1,10 - 7,00)	4,62 A			1.170 (210 - 1.670)	585	5,20

1) For Etherea, 4 Way 60x60 cassette and Low static pressure hide away. 2) For Floor console. 3) SEER and SCOP are showed only on the 100% capacity combination as requested by the ErP directive. On the other capacity combinations, EER and COP are show. Input Power, Annual consumption is show following the ErP directive only on the 100% capacity combination as requested by the ErP directive.
* Data for not simultaneous operation.

Free Multi 2x1 CU-2E18PBE. Minimum capacity connected: 3,2 kW. Maximum capacity connected: 6,4 kW

Indoor unit capacity	Cooling capacity (kW)			EER	SEER	Pdesign	Input power rating	Annual consumption	Current	Moisture removal	Heating capacity (kW)			COP	SCOP	Pdesign at -10°C	Input power rating	Annual consumption	Current
	Room A	Room B	Total (Min - Max)	W/W	W/W	kWh	W	kWh	230V (A)	Volume (l/h)	Room A	Room B	Total (Min - Max)	W/W	W/W	kWh	W	kWh	230V (A)
1 Room																			
5	1,60		1,60 (1,10 - 2,30)	3,90 A			410 (220 - 600)	205	1,95	1,0	2,60		2,60 (0,70 - 3,80)	3,77 A			690 (170 - 1.110)	345	3,05
7	2,00		2,00 (1,10 - 2,90)	3,85 A			520 (220 - 750)	260	2,45	1,3	3,20		3,20 (0,70 - 4,80)	3,76 A			850 (170 - 1.410)	425	3,75
9[1]	2,50		2,50 (1,10 - 3,50)	3,73 A			670 (220 - 1.000)	335	3,15	1,5	3,60		3,60 (0,70 - 5,50)	3,50 B			1.030 (170 - 1.700)	515	4,55
9[2]	2,80		2,80 (1,10 - 3,50)	3,73 A			750 (220 - 1.000)	375	3,50	1,6	4,00		4,00 (0,70 - 5,50)	3,48 B			1.150 (170 - 1.700)	575	5,10
12	3,20		3,20 (1,10 - 4,00)	3,48 A			920 (220 - 1.220)	460	4,30	1,8	4,50		4,50 (0,70 - 6,20)	3,60 B			1.250 (170 - 1.810)	625	5,55
2 Rooms																			
5 + 5	1,60	1,60	3,20 (1,50 - 4,00)	3,76 A			850 (250 - 1.100)	425	4,00	1,0 + 1,0	2,60	2,60	5,20 (1,10 - 7,00)	4,60 A			1.130 (210 - 1.710)	565	5,00
5 + 7	1,60	2,00	3,60 (1,50 - 4,50)	3,71 A			970 (250 - 1.280)	485	4,55	1,0 + 1,3	2,40	3,00	5,40 (1,10 - 7,00)	4,58 A			1.180 (210 - 1.690)	590	5,25
5 + 9[1]	1,60	2,50	4,10 (1,50 - 5,10)	3,63 A			1.130 (250 - 1.480)	565	5,30	1,0 + 1,5	2,11	3,29	5,40 (1,10 - 7,00)	4,58 A			1.180 (210 - 1.690)	590	5,25
5 + 9[2]	1,60	2,80	4,40 (1,50 - 5,20)	3,61 A			1.220 (250 - 1.520)	610	5,70	1,0 + 1,6	1,96	3,44	5,40 (1,10 - 7,00)	4,58 A			1.180 (210 - 1.690)	590	5,25
5 + 12	1,50	3,00	4,50 (1,50 - 5,20)	3,66 A			1.230 (250 - 1.520)	615	5,75	1,0 + 1,7	1,80	3,60	5,40 (1,10 - 7,00)	4,58 A			1.180 (210 - 1.690)	590	5,25
7 + 7	2,00	2,00	4,00 (1,50 - 5,00)	3,67 A			1.090 (250 - 1.460)	545	5,10	1,3 + 1,3	2,70	2,70	5,40 (1,10 - 7,00)	4,62 A			1.170 (210 - 1.670)	585	5,20
7 + 9[1]	2,00	2,50	4,50 (1,50 - 5,20)	3,66 A			1.230 (250 - 1.520)	615	5,75	1,3 + 1,5	2,40	3,00	5,40 (1,10 - 7,00)	4,62 A			1.170 (210 - 1.670)	585	5,20
7 + 9[2]	1,85	2,65	4,50 (1,50 - 5,20)	3,66 A			1.230 (250 - 1.520)	615	5,75	1,2 + 1,6	2,25	3,15	5,40 (1,10 - 7,00)	4,62 A			1.170 (210 - 1.670)	585	5,20
7 + 12	2,00	3,20	4,80 (1,50 - 5,30)		6,50 A+++[3]	5,20	1.520 (250 - 1.580)	280	7,10	1,3 + 1,8	2,15	3,45	5,60 (1,10 - 7,20)		4,0 A+[3]	4,20	1.210 (210 - 1.700)	1.470	5,35
9[1] + 9[1]	2,50	2,50	4,80 (1,50 - 5,20)	3,47 A			1.440 (250 - 1.520)	720	6,70	1,5 + 1,5	2,80	2,80	5,60 (1,10 - 7,20)	4,63 A			1.210 (210 - 1.700)	605	5,35
9[1] + 9[2]	2,45	2,75	4,80 (1,50 - 5,20)		6,50 A+++[3]	5,20	1.520 (250 - 1.580)	280	7,10	1,5 + 1,6	2,65	2,95	5,60 (1,10 - 7,20)		4,0 A+[3]	4,20	1.210 (210 - 1.700)	1.470	5,35
9[1] + 12	2,30	2,90	5,00 (1,50 - 5,30)	3,42 A			1.520 (250 - 1.580)	760	7,10	1,5 + 1,7	2,45	3,15	5,60 (1,10 - 7,20)	4,63 A			1.210 (210 - 1.700)	605	5,35
9[2] + 9[2]	2,60	2,60	4,80 (1,50 - 5,20)	3,42 A			1.520 (250 - 1.580)	760	7,10	1,6 + 1,6	2,80	2,80	5,60 (1,10 - 7,20)	4,63 A			1.210 (210 - 1.700)	605	5,35
9[2] + 12	2,45	2,75	5,00 (1,50 - 5,30)	3,42 A			1.520 (250 - 1.580)	760	7,10	1,5 + 1,6	2,60	3,00	5,60 (1,10 - 7,20)	4,63 A			1.210 (210 - 1.700)	605	5,35
12 + 12	2,60	2,60	5,20 (1,50 - 5,40)	3,42 A			1.520 (250 - 1.580)	760	7,10	1,6 + 1,6	2,80	2,80	5,60 (1,10 - 7,20)	4,63 A			1.210 (210 - 1.700)	605	5,35

1) For Etherea, 4 Way 60x60 cassette and Low static pressure hide away. 2) For Floor console. 3) SEER and SCOP are showed only on the 100% capacity combination as requested by the ErP directive. On the other capacity combinations, EER and COP are show. Input Power, Annual consumption is show following the ErP directive only on the 100% capacity combination as requested by the ErP directive.
* Data for not simultaneous operation.

Free Multi 3x1 CU-3E18PBE. Minimum capacity connected: 4,5 kW. Maximum capacity connected: 9,0 kW

Indoor unit capacity	Cooling capacity (kW)				EER	SEER	Pdesign	Input power rating	Annual consumption	Current	Moisture removal	Heating capacity (kW)				COP	SCOP	Pdesign at -10°C	Input power rating	Annual consumption	Current
	Room A	Room B	Room C	Total (Min - Max)	W/W	W/W	kWh	W	kWh	230V (A)	Volume (l/h)	Room A	Room B	Room C	Total (Min - Max)	W/W	W/W	kWh	W	kWh	230V (A)
1 Room																					
5	1,60			1,60 (1,30 - 2,30)	4,00 A			400 (250 - 640)	200	2,00	1,0	2,60			2,60 (1,20 - 3,20)	4,33 A			600 (300 - 960)	300	3,00
7	2,00			2,00 (1,80 - 2,90)	4,00 A			500 (340 - 810)	250	2,50	1,3	3,20			3,20 (1,20 - 4,10)	4,32 A			740 (300 - 1.230)	370	3,70
9[1]	2,50			2,50 (1,80 - 2,90)	3,97 A			630 (340 - 810)	315	3,00	1,5	3,60			3,60 (1,20 - 4,30)	3,83 A			940 (300 - 1.230)	470	4,50
9[2]	2,80			2,80 (1,80 - 2,90)	4,00 A			700 (340 - 810)	350	3,30	1,6	4,00			4,00 (1,20 - 4,30)	3,81 A			1.050 (300 - 1.230)	525	5,20
12	3,20			3,20 (1,80 - 3,80)	4,00 A			800 (340 - 1.360)	400	3,70	1,8	4,50			4,50 (1,20 - 5,80)	3,66 A			1.230 (300 - 2.100)	615	5,80
15	4,00			4,00 (1,80 - 4,30)	3,23 A			1.240 (340 - 1.990)	620	5,60	2,3	5,60			5,60 (1,20 - 6,80)	3,26 C			1.720 (300 - 2.930)	860	7,70
18	5,00			5,00 (1,90 - 5,70)	3,23 A			1.550 (340 - 2.130	775	6,80	2,7	6,80			6,80 (1,20 - 6,90)	3,24 C			2.100 (300 - 2.520)	1050	9,20
2 Rooms																					
5 + 5	1,60	1,60		3,20 (1,80 - 6,20)	4,92 A			650 (330 - 2.090)	325	3,00	1,0 + 1,0	2,60	2,60		5,20 (1,40 - 7,00)	4,19 A			1.240 (340 - 1.930)	620	5,70
5 + 7	1,60	2,00		3,60 (1,80 - 6,20)	4,50 A			800 (330 - 2.050)	400	3,70	1,0 + 1,3	2,49	3,11		5,60 (1,40 - 7,00)	4,12 A			1.360 (330 - 1.900)	680	6,30
5 + 9[1]	1,60	2,50		4,10 (1,80 - 6,20)	4,27 A			960 (330 - 2.050)	480	4,30	1,0 + 1,5	2,42	3,78		6,20 (1,40 - 7,00)	4,03 A			1.540 (330 - 1.900)	770	7,10
5 + 9[2]	1,60	2,80		4,40 (1,80 - 6,20)	4,00 A			1.100 (330 - 2.050)	550	4,90	1,0 + 1,6	2,33	4,07		6,40 (1,40 - 7,00)	3,98 A			1.610 (330 - 1.900)	805	7,40
5 + 12	1,60	3,20		4,80 (1,80 - 6,30)	3,72 A			1.290 (330 - 2.060)	645	5,70	1,0 + 1,8	2,13	4,27		6,40 (1,40 - 7,30)	4,10 A			1.560 (310 - 1.990)	780	7,20
5 + 15	1,49	3,71		5,20 (1,90 - 6,40)	3,51 A			1.480 (350 - 2.100)	740	6,50	0,9 + 2,2	1,94	4,86		6,80 (1,40 - 7,30)	4,05 A			1.680 (310 - 1.980)	840	7,80
5 + 18	1,26	3,94		5,20 (1,90 - 6,80)	4,06 A			1.280 (340 - 2.040)	640	5,60	0,8 + 2,3	1,65	5,15		6,80 (1,40 - 8,00)	4,42 A			1.540 (240 - 2.090)	770	7,10
7 + 7	2,00	2,00		4,00 (1,80 - 6,20)	4,30 A			930 (330 - 2.010)	465	4,20	1,3 + 1,3	2,90	2,90		5,80 (1,40 - 7,00)	4,20 A			1.380 (320 - 1.890)	690	6,40
7 + 9[1]	2,00	2,50		4,50 (1,80 - 6,20)	3,95 A			1.140 (330 - 2.010)	570	5,10	1,3 + 1,5	2,84	3,56		6,40 (1,40 - 7,00)	4,00 A			1.600 (320 - 1.890)	800	7,40
7 + 9[2]	2,00	2,80		4,80 (1,80 - 6,20)	3,72 A			1.290 (330 - 2.010)	645	5,70	1,3 + 1,6	2,67	3,73		6,40 (1,40 - 7,00)	4,00 A			1.600 (320 - 1.890)	800	7,40
7 + 12	2,00	3,20		5,20 (1,80 - 6,30)		6,40 A++[3]	5,20	1.480 (330 - 2.020)	260	6,50	1,3 + 1,8	2,62	4,18		6,80 (1,40 - 7,30)		3,80 A+[3]	4,80	1.680 (310 - 1.980)	1.680	7,80
7 + 15	1,73	3,47		5,20 (1,90 - 6,40)	3,61 A			1.440 (350 - 2.060)	720	6,30	1,1 + 2,0	2,27	4,53		6,80 (1,40 - 7,30)	4,05 A			1.680 (280 - 1.940)	840	7,80
7 + 18	1,49	3,71		5,20 (1,90 - 6,80)	4,06 A			1.280 (340 - 2.040)	640	5,60	0,9 + 2,2	1,94	4,86		6,80 (1,40 - 8,00)	4,44 A			1.530 (240 - 2.080)	765	7,10
9[1] + 9[1]	2,50	2,50		5,00 (1,80 - 6,20)	3,57 A			1.400 (330 - 2.010)	700	6,10	1,5 + 1,5	3,40	3,40		6,80 (1,40 - 7,00)	3,93 A			1.730 (320 - 1.890)	865	8,00
9[1] + 9[2]	2,45	2,75		5,20 (1,90 - 6,20)		6,40 A++[3]	5,20	1.520 (360 - 2.010)	760	6,70	1,5 + 1,6	3,21	3,59		6,80 (1,40 - 7,00)		3,80 A+[3]	4,80	1.730 (320 - 1.890)	1.680	8,00
9[1] + 12	2,28	2,92		5,20 (1,90 - 6,30)	3,51 A			1.480 (350 - 2.020)	740	6,50	1,5 + 1,7	2,98	3,82		6,80 (1,40 - 7,30)	4,05 A			1.680 (310 - 1.980)	840	7,80
9[1] + 15	2,00	3,20		5,20 (1,90 - 6,40)	3,61 A			1.440 (350 - 2.060)	720	6,30	1,3 + 1,8	2,62	4,18		6,80 (1,40 - 7,30)	4,05 A			1.680 (280 - 1.940)	840	7,80
9[1] + 18	1,73	3,47		5,20 (1,90 - 6,80)	4,06 A			1.280 (340 - 2.040)	640	5,60	1,1 + 2,0	2,27	4,53		6,80 (1,40 - 8,00)	4,44 A			1.530 (240 - 2.080)	765	7,10
9[2] + 9[2]	2,60	2,60		5,20 (1,90 - 6,20)	3,42 A			1.520 (360 - 2.010)	760	6,70	1,6 + 1,6	3,40	3,40		6,80 (1,40 - 7,00)	3,93 A			1.730 (320 - 1.890)	865	8,00
9[2] + 12	2,43	2,77		5,20 (1,90 - 6,30)	3,51 A			1.480 (350 - 2.020)	740	6,50	1,5 + 1,6	3,17	3,63		6,80 (1,40 - 7,30)	4,05 A			1.680 (310 - 1.980)	840	7,80
9[2] + 15	2,14	3,06		5,20 (1,90 - 6,40)	3,61 A			1.440 (350 - 2.060)	720	6,30	1,4 + 1,7	2,80	4,00		6,80 (1,40 - 7,30)	4,05 A			1.680 (280 - 1.940)	840	7,80
9[2] + 18	1,87	3,33		5,20 (1,90 - 6,80)	4,06 A			1.280 (340 - 2.040)	640	5,60	1,2 + 1,9	2,44	4,36		6,80 (1,40 - 8,00)	4,44 A			1.530 (240 - 2.080)	765	7,10
12 + 12	2,60	2,60		5,20 (1,90 - 6,40)	3,71 A			1.400 (350 - 2.020)	700	6,10	1,6 + 1,6	3,40	3,40		6,80 (1,40 - 7,50)	4,07 A			1.670 (270 - 2.000)	835	7,70
12 + 15	2,31	2,89		5,20 (1,90 - 6,50)	3,71 A			1.400 (350 - 2.070)	700	6,10	1,5 + 1,7	3,02	3,78		6,80 (1,40 - 7,50)	4,10 A			1.660 (260 - 2.000)	830	7,70
12 + 18	2,03	3,17		5,20 (1,90 - 6,90)	4,19 A			1.240 (360 - 2.040)	620	5,40	1,3 + 1,8	2,65	4,15		6,80 (1,40 - 8,00)	4,50 A			1.510 (240 - 2.020)	755	7,00
15 + 15	2,60	2,60		5,20 (1,90 - 6,50)	3,71 A			1.400 (350 - 2.070)	700	6,10	1,6 + 1,6	3,40	3,40		6,80 (1,40 - 7,60)	4,20 A			1.620 (260 - 2.030)	810	7,50
15 + 18	2,31	2,89		5,20 (1,90 - 6,90)	4,19 A			1.240 (360 - 2.040)	620	5,40	1,5 + 1,7	3,02	3,78		6,80 (1,40 - 8,00)	4,53 A			1.500 (240 - 2.020)	750	6,90
3 Rooms																					
5 + 5 + 5	1,60	1,60	1,60	4,80 (1,80 - 7,20)	4,57 A			1.050 (360 - 2.130)	525	4,70	1,0 + 1,0 + 1,0	2,26	2,26	2,26	6,78 (1,50 - 8,10)	4,64 A			1.460 (290 - 2.040)	730	6,70
5 + 5 + 7	1,60	1,60	2,00	5,20 (1,80 - 7,30)		7,00 A++[3]	5,20	1.200 (360 - 2.180)	260	5,30	1,0 + 1,0 + 1,3	2,09	2,09	2,62	6,80 (1,60 - 8,30)		4,00 A+[3]	4,80	1.450 (320 - 2.110)	1.680	6,70
5 + 5 + 9[1]	1,46	1,46	2,28	5,20 (1,90 - 7,20)	4,33 A			1.200 (390 - 2.090)	600	5,30	0,9 + 0,9 + 1,5	1,91	1,91	2,98	6,80 (1,60 - 8,30)	4,69 A			1.450 (320 - 2.110)	725	6,70
5 + 5 + 9[2]	1,39	1,39	2,42	5,20 (1,90 - 7,20)	4,33 A			1.200 (390 - 2.090)	600	5,30	0,9 + 0,9 + 1,5	1,81	1,81	3,18	6,80 (1,60 - 8,30)	4,69 A			1.450 (320 - 2.110)	725	6,70
5 + 5 + 12	1,30	1,30	2,60	5,20 (1,90 - 7,20)	4,33 A			1.200 (390 - 2.040)	600	5,30	0,8 + 0,8 + 1,6	1,70	1,70	3,40	6,80 (1,60 - 8,30)	4,76 A			1.430 (310 - 2.040)	715	6,60
5 + 5 + 15	1,16	1,16	2,88	5,20 (1,80 - 7,30)	4,33 A			1.200 (390 - 2.090)	600	5,30	0,7 + 0,7 + 1,7	1,51	1,51	3,78	6,80 (1,60 - 8,30)	4,79 A			1.420 (310 - 2.040)	710	6,60
5 + 5 + 18	1,01	1,01	3,18	5,20 (1,80 - 7,30)	4,64 A			1.120 (420 - 1.910)	560	5,00	0,7 + 0,7 + 1,8	1,33	1,33	4,14	6,80 (1,60 - 8,30)	5,15 A			1.320 (360 - 1.900)	660	6,10
5 + 7 + 7	1,48	1,86	1,86	5,20 (1,90 - 7,20)	4,33 A			1.200 (390 - 2.090)	600	5,30	0,9 + 1,2 + 1,2	1,94	2,43	2,43	6,80 (1,60 - 8,30)	4,72 A			1.440 (310 - 2.060)	720	6,60
5 + 7 + 9[1]	1,36	1,70	2,14	5,20 (1,90 - 7,20)	4,33 A			1.200 (390 - 2.090)	600	5,30	0,9 + 1,1 + 1,4	1,78	2,23	2,79	6,80 (1,60 - 8,30)	4,72 A			1.440 (310 - 2.060)	720	6,60
5 + 7 + 9[2]	1,30	1,63	2,27	5,20 (1,90 - 7,20)	4,33 A			1.200 (390 - 2.090)	600	5,30	0,8 + 1,0 + 1,5	1,69	2,13	2,98	6,80 (1,60 - 8,30)	4,72 A			1.440 (310 - 2.060)	720	6,60
5 + 7 + 12	1,22	1,53	2,45	5,20 (1,90 - 7,20)	4,33 A			1.200 (390 - 2.000)	600	5,30	0,8 + 1,0 + 1,5	1,60	2,00	3,20	6,80 (1,60 - 8,30)	4,79 A			1.420 (310 - 2.040)	710	6,60
5 + 7 + 15	1,09	1,37	2,74	5,20 (1,80 - 7,30)	4,33 A			1.200 (390 - 2.090)	600	5,30	0,7 + 0,9 + 1,6	1,43	1,79	3,58	6,80 (1,60 - 8,30)	4,79 A			1.420 (310 - 2.030)	710	6,60
5 + 7 + 18	0,97	1,21	3,02	5,20 (1,80 - 7,30)	4,64 A			1.120 (420 - 1.860)	560	5,00	0,7 + 0,8 + 1,7	1,27	1,58	3,95	6,80 (1,60 - 8,30)	5,19 A			1.310 (360 - 1.900)	655	6,00
5 + 9[1] + 9[1]	1,26	1,97	1,97	5,20 (1,90 - 7,20)	4,33 A			1.200 (390 - 2.090)	600	5,30	0,8 + 1,3 + 1,3	1,64	2,58	2,58	6,80 (1,60 - 8,30)	4,72 A			1.440 (310 - 2.060)	720	6,60
5 + 9[1] + 9[2]	1,21	1,88	2,11	5,20 (1,90 - 7,20)	4,33 A			1.200 (390 - 2.090)	600	5,30	0,8 + 1,2 + 1,4	1,58	2,46	2,76	6,80 (1,60 - 8,30)	4,72 A			1.440 (310 - 2.060)	720	6,60
5 + 9[1] + 12	1,14	1,78	2,28	5,20 (1,80 - 7,30)	4,33 A			1.200 (390 - 2.090)	600	5,30	0,7 + 1,1 + 1,5	1,49	2,33	2,98	6,80 (1,60 - 8,30)	4,79 A			1.420 (310 - 2.040)	710	6,60
5 + 9[1] + 15	1,03	1,60	2,57	5,20 (1,80 - 7,30)	4,33 A			1.200 (390 - 2.090)	600	5,30	0,7 + 1,0 + 1,6	1,34	2,10	3,36	6,80 (1,60 - 8,30)	4,79 A			1.420 (310 - 2.030)	710	6,60
5 + 9[2] + 9[2]	1,16	2,02	2,02	5,20 (1,90 - 7,20)	4,33 A			1.200 (390 - 2.090)	600	5,30	0,7 + 1,3 + 1,3	1,52	2,64	2,64	6,80 (1,60 - 8,30)	4,72 A			1.440 (310 - 2.060)	720	6,60
5 + 9[2] + 12	1,09	1,92	2,19	5,20 (1,90 - 7,20)	4,33 A			1.200 (390 - 2.000)	600	5,30	0,7 + 1,2 + 1,4	1,43	2,51	2,86	6,80 (1,60 - 8,30)	4,79 A			1.420 (310 - 2.040)	710	6,60
5 + 9[2] + 15	0,99	1,73	2,48	5,20 (1,80 - 7,30)	4,33 A			1.200 (390 - 2.090)	600	5,30	0,7 + 1,1 + 1,5	1,29	2,27	3,24	6,80 (1,60 - 8,30)	4,79 A			1.420 (310 - 2.030)	710	6,60
5 + 12 + 12	1,04	2,08	2,08	5,20 (1,80 - 7,30)	4,48 A			1.160 (390 - 2.040)	580	5,10	0,7 + 1,3 + 1,3	1,36	2,72	2,72	6,80 (1,60 - 8,30)	4,86 A			1.400 (320 - 2.010)	700	6,50
5 + 12 + 15	0,95	1,89	2,36	5,20 (1,80 - 7,30)	4,48 A			1.160 (390 - 2.040)	580	5,10	0,7 + 1,2 + 1,5	1,24	2,47	3,09	6,80 (1,60 - 8,30)	4,86 A			1.400 (320 - 2.000)	700	6,50
7 + 7 + 7	1,73	1,73	1,73	5,19 (1,90 - 7,20)	4,33 A			1.200 (390 - 2.040)	600	5,30	1,1 + 1,1 + 1,1	2,26	2,26	2,26	6,78 (1,60 - 8,30)	4,71 A			1.440 (310 - 2.050)	720	6,60
7 + 7 + 9[1]	1,60	1,60	2,00	5,20 (1,90 - 7,20)	4,33 A			1.200 (390 - 2.040)	600	5,30	1,0 + 1,0 + 1,3	2,09	2,09	2,62	6,80 (1,60 - 8,30)	4,72 A			1.440 (310 - 2.050)	720	6,60
7 + 7 + 9[2]	1,53	1,53	2,14	5,20 (1,90 - 7,20)	4,33 A			1.200 (390 - 2.040)	600	5,30	1,0 + 1,0 + 1,4	2,00	2,00	2,80	6,80 (1,60 - 8,30)	4,72 A			1.440 (310 - 2.050)	720	6,60
7 + 7 + 12	1,44	1,44	2,32	5,20 (1,90 - 7,20)	4,48 A			1.160 (390 - 2.000)	580	5,10	0,9 + 0,9 + 1,5	1,89	1,89	3,02	6,80 (1,60 - 8,30)	4,79 A			1.420 (310 - 2.030)	710	6,60
7 + 7 + 15	1,30	1,30	2,60	5,20 (1,80 - 7,30)	4,48 A			1.160 (390 - 2.040)	580	5,10	0,8 + 0,8 + 1,6	1,70	1,70	3,40	6,80 (1,60 - 8,30)	4,82 A			1.410 (320 - 2.020)	705	6,50
7 + 7 + 18	1,16	1,16	2,88	5,20 (1,80 - 7,30)	4,64 A			1.120 (420 - 1.860)	560	5,00	0,7 + 0,7 + 1,7	1,51	1,51	3,78	6,80 (1,60 - 8,30)	5,19 A			1.310 (360 - 1.890)	655	6,00
7 + 9[1] + 9[1]	1,48	1,86	1,86	5,20 (1,90 - 7,20)	4,33 A			1.200 (390 - 2.040)	600	5,30	0,9 + 1,2 + 1,2	1,94	2,43	2,43	6,80 (1,60 - 8,30)	4,72 A			1.440 (310 - 2.050)	720	6,60
7 + 9[1] + 9[2]	1,42	1,78	2,00	5,20 (1,90 - 7,20)	4,33 A			1.200 (390 - 2.040)	600	5,30	0,9 + 1,1 + 1,3	1,86	2,33	2,61	6,80 (1,60 - 8,30)	4,72 A			1.440 (310 - 2.050)	720	6,60
7 + 9[1] + 12	1,35	1,69	2,16	5,20 (1,90 - 7,20)	4,48 A			1.160 (390 - 2.000)	580	5,10	0,9 + 1,1 + 1,4	1,76	2,21	2,83	6,80 (1,60 - 8,30)	4,79 A			1.420 (310 - 2.030)	710	6,60
7 + 9[1] + 15	1,22	1,53	2,45	5,20 (1,80 - 7,30)	4,48 A			1.160 (390 - 2.040)	580	5,10	0,8 + 1,0 + 1,5	1,60	2,00	3,20	6,80 (1,60 - 8,30)	4,82 A			1.410 (320 - 2.020)	705	6,50
7 + 9[2] + 9[2]	1,36	1,92	1,92	5,20 (1,90 - 7,20)	4,33 A			1.200 (390 - 2.040)	600	5,30	0,9 + 1,2 + 1,2	1,78	2,51	2,51	6,80 (1,60 - 8,30)	4,72 A			1.440 (310 - 2.050)	720	6,60
7 + 9[2] + 12	1,30	1,82	2,08	5,20 (1,90 - 7,20)	4,48 A			1.160 (390 - 2.000)	580	5,10	0,8 + 1,2 + 1,3	1,70	2,38	2,72	6,80 (1,60 - 8,30)	4,79 A			1.420 (310 - 2.030)	710	6,60
7 + 9[2] + 15	1,18	1,65	2,37	5,20 (1,80 - 7,30)	4,48 A			1.160 (390 - 2.040)	580	5,10	0,7 + 1,1 + 1,5	1,55	2,16	3,09	6,80 (1,60 - 8,30)	4,82 A			1.410 (320 - 2.020)	705	6,50
7 + 12 + 12	1,24	1,98	1,98	5,20 (1,80 - 7,30)	4,48 A			1.160 (390 - 2.000)	580	5,10	0,8 + 1,3 + 1,3	1,62	2,59	2,59	6,80 (1,60 - 8,30)	4,86 A			1.400 (320 - 2.000)	700	6,50
9[1] + 9[1] + 9[1]	1,73	1,73	1,73	5,19 (1,90 - 7,20)	4,33 A			1.200 (390 - 2.040)	600	5,30	1,1 + 1,1 + 1,1	2,26	2,26	2,26	6,78 (1,60 - 8,30)	4,71 A			1.440 (310 - 2.050)	720	6,60
9[1] + 9[1] + 9[2]	1,67	1,67	1,86	5,20 (1,90 - 7,20)	4,33 A			1.200 (390 - 2.040)	600	5,30	1,1 + 1,1 + 1,2	2,18	2,18	2,44	6,80 (1,60 - 8,30)	4,72 A			1.440 (310 - 2.050)	720	6,60
9[1] + 9[1] + 12	1,59	1,59	2,02	5,20 (1,90 - 7,20)	4,48 A			1.160 (390 - 2.000)	580	5,10	1,0 + 1,0 + 1,3	2,07	2,07	2,66	6,80 (1,60 - 8,30)	4,79 A			1.420 (310 - 2.030)	710	6,60
9[1] + 9[1] + 15	1,44	1,44	2,32	5,20 (1,80 - 7,30)	4,48 A			1.160 (390 - 2.040)	580	5,10	0,9 + 0,9 + 1,5	1,89	1,89	3,02	6,80 (1,60 - 8,30)	4,82 A			1.410 (320 - 2.020)	705	6,50
9[1] + 9[2] + 9[2]	1,60	1,80	1,80	5,20 (1,90 - 7,20)	4,33 A			1.200 (390 - 2.040)	600	5,30	1,0 + 1,2 + 1,2	2,10	2,35	2,35	6,80 (1,60 - 8,30)	4,72 A			1.440 (310 - 2.050)	720	6,60
9[1] + 9[2] + 12	1,53	1,71	1,96	5,20 (1,90 - 7,20)	4,48 A			1.160 (390 - 2.000)	580	5,10	1,0 + 1,1 + 1,3	2,00	2,24	2,56	6,80 (1,60 - 8,30)	4,79 A			1.420 (310 - 2.030)	710	6,60
9[1] + 12 + 12	1,46	1,87	1,87	5,20 (1,80 - 7,30)	4,48 A			1.160 (390 - 2.000)	580	5,10	0,9 + 1,2 + 1,2	1,92	2,44	2,44	6,80 (1,60 - 8,30)	4,86 A			1.400 (320 - 2.000)	700	6,50
9[2] + 9[2] + 9[2]	1,73	1,73	1,73	5,19 (1,90 - 7,20)	4,33 A			1.200 (390 - 2.040)	600	5,30	1,1 + 1,1 + 1,1	2,26	2,26	2,26	6,78 (1,60 - 8,30)	4,71 A			1.440 (310 - 2.050)	720	6,60
9[2] + 9[2] + 12	1,65	1,65	1,90	5,20 (1,90 - 7,20)	4,48 A			1.160 (390 - 2.000)	580	5,10	1,1 + 1,1 + 1,2	2,16	2,16	2,48	6,80 (1,60 - 8,30)	4,79 A			1.420 (310 - 2.030)	710	6,60

1) For Etherea, 4 Way 60x60 cassette and Low static pressure hide away. 2) For Floor console. 3) SEER and SCOP are showed only on the 100% capacity combination as requested by the ErP directive. On the other capacity combinations, EER and COP are show. Input Power, Annual consumption is show following the ErP directive only on the 100% capacity combination as requested by the ErP directive.
* Data for not simultaneous operation.

Free Multi combinations table

Free Multi 4x1 CU-4E23PBE. Minimum capacity connected: 4,5 kW. Maximum capacity connected: 11,0 kW

Indoor unit capacity	Cooling capacity (kW)					EER	SEER	Pdesign	Input power rating	Annual consumption	Current	Moisture removal	Heating capacity (kW) Rooms					COP	SCOP	Pdesign at -10°C	Input power rating	Annual consumption	Current
	Room A	Room B	Room C	Room D	Total (Min - Max)	W/W	W/W	kWh	W	kWh	230V (A)	Volume (l/h)	Room A	Room B	Room C	Room D	Total (Min - Max)	W/W	W/W	kWh	W	kWh	230V (A)
1 Room																							
5	1,60				1,60 (1,30 - 2,30)	4,00 A			400 (250 - 640)	200	2,00	1,00	2,60				2,60 (1,20 - 3,20)	4,33 A			600 (300 - 960)	300	3,00
7	2,00				2,00 (1,80 - 2,90)	4,00 A			500 (340 - 810)	250	2,50	1,30	3,20				3,20 (1,20 - 4,10)	4,32 A			740 (300 - 1.230)	370	3,70
9[1]	2,50				2,50 (1,80 - 2,90)	3,97 A			630 (340 - 810)	315	3,20	1,50	3,60				3,60 (1,20 - 4,30)	3,83 A			940 (300 - 1.230)	470	4,70
9[2]	2,80				2,80 (1,80 - 2,90)	4,00 A			700 (340 - 810)	350	3,50	1,60	4,00				4,00 (1,20 - 4,30)	3,81 A			1.050 (300 - 1.230)	525	5,20
12	3,20				3,20 (1,80 - 3,80)	4,00 A			800 (340 - 1.360)	400	3,90	1,80	4,50				4,50 (1,20 - 5,80)	3,66 A			1.230 (300 - 2.100)	615	6,00
15	4,00				4,00 (1,80 - 4,30)	3,23 A			1.240 (340 - 1.990)	620	5,80	2,30	5,60				5,60 (1,20 - 6,80)	3,26 C			1.720 (300 - 2.930)	860	8,00
18	5,00				5,00 (1,90 - 5,70)	3,23 A			1.550 (340 - 2.130)	775	7,20	2,70	6,80				6,80 (1,20 - 6,90)	3,24 C			2.100 (300 - 2.520)	1.050	9,70
21	6,00				6,00 (1,90 - 6,20)	2,96 C			2.030 (340 - 2.330)	1.015	9,20	3,30	8,50				8,50 (1,30 - 9,0)	3,54 B			2.400 (620 - 2.530)	1.200	11,10
2 Rooms																							
5 + 5	1,60	1,60			3,20 (1,90 - 6,40)	5,08 A			630 (270 - 2.010)	315	3,00	1,00 + 1,00	2,60	2,60			5,20 (2,70 - 9,80)	4,00 A			1.300 (660 - 2.920)	650	6,10
5 + 7	1,60	2,00			3,60 (1,90 - 6,40)	4,68 A			770 (270 - 1.970)	385	3,60	1,00 + 1,30	2,58	3,22			5,80 (2,70 - 9,80)	3,92 A			1.480 (650 - 2.920)	740	6,90
5 + 9[1]	1,60	2,50			4,10 (1,90 - 6,40)	4,41 A			930 (270 - 1.970)	465	4,20	1,00 + 1,50	2,38	3,72			6,10 (2,70 - 9,80)	3,86 A			1.580 (650 - 2.920)	790	7,40
5 + 9[2]	1,60	2,80			4,40 (1,90 - 6,40)	4,11 A			1.070 (270 - 1.970)	535	4,80	1,00 + 1,60	2,22	3,88			6,10 (2,70 - 9,80)	3,86 A			1.580 (650 - 2.920)	790	7,40
5 + 12	1,60	3,20			4,80 (1,90 - 6,90)	3,87 A			1.240 (270 - 2.360)	620	5,50	1,00 + 1,80	2,13	4,27			6,40 (2,70 - 9,90)	3,95 A			1.620 (630 - 2.930)	810	7,50
5 + 15	1,60	4,00			5,60 (1,90 - 6,90)	3,33 A			1.680 (270 - 2.320)	840	7,50	1,00 + 2,30	2,29	5,71			8,00 (2,70 - 9,90)	3,60 A			2.220 (630 - 2.930)	1.110	10,20
5 + 18	1,60	5,00			6,60 (2,00 - 7,50)	3,24 A			2.040 (280 - 2.400)	1.020	9,00	1,00 + 2,70	2,06	6,44			8,50 (2,80 - 10,20)	3,76 A			2.260 (560 - 2.900)	1.130	10,40
5 + 21	1,43	5,37			6,80 (2,00 - 7,50)	3,12 B			2.180 (280 - 2.400)	1.090	9,60	0,90 + 2,90	1,79	6,71			8,50 (2,80 - 10,20)	3,76 A			2.260 (560 - 2.900)	1.130	10,40
7 + 7	2,00	2,00			4,00 (1,90 - 6,40)	4,44 A			900 (270 - 1.940)	450	4,10	1,30 + 1,30	2,90	2,90			5,80 (2,70 - 9,80)	4,03 A			1.440 (640 - 2.930)	720	6,70
7 + 9[1]	2,00	2,50			4,50 (1,90 - 6,40)	4,09 A			1.100 (270 - 1.940)	550	4,90	1,30 + 1,50	2,71	3,39			6,10 (2,70 - 9,80)	3,89 A			1.570 (640 - 2.930)	785	7,30
7 + 9[2]	2,00	2,80			4,80 (1,90 - 6,40)	3,87 A			1.240 (270 - 1.940)	620	5,50	1,30 + 1,60	2,67	3,73			6,40 (2,70 - 9,80)	3,83 A			1.670 (640 - 2.930)	835	7,80
7 + 12	2,00	3,20			5,20 (1,90 - 6,90)	3,61 A			1.440 (270 - 2.320)	720	6,40	1,30 + 1,80	2,69	4,31			7,00 (2,70 - 9,90)	3,76 A			1.860 (630 - 2.930)	930	8,60
7 + 15	2,00	4,00			6,00 (1,90 - 6,90)	3,17 B			1.890 (270 - 2.280)	945	8,30	1,30 + 2,30	2,73	5,47			8,20 (2,70 - 9,90)	3,58 B			2.290 (620 - 2.930)	1.145	10,60
7 + 18	1,94	4,86			6,80 (2,00 - 7,50)		5,80 A++[3]	6,80	2.180 (280 - 2.350)	340	9,60	1,30 + 2,60	2,43	6,07			8,50 (2,80 - 10,20)		3,80 A[3]	5,50	2.260 (560 - 2.890)	1.925	10,40
7 + 21	1,70	5,10			6,80 (2,00 - 7,50)	3,12 B			2.180 (280 - 2.350)	1.090	9,60	1,10 + 2,80	2,12	6,38			8,50 (2,80 - 10,20)	3,76 A			2.260 (560 - 2.890)	1.130	10,40
9[1] + 9[1]	2,50	2,50			5,00 (1,90 - 6,80)	3,68 A			1.360 (270 - 2.310)	680	6,00	1,50 + 1,50	3,20	3,20			6,40 (2,70 - 9,80)	3,83 A			1.670 (640 - 2.930)	835	7,80
9[1] + 9[2]	2,50	2,80			5,30 (1,90 - 6,80)	3,51 A			1.510 (270 - 2.310)	755	6,70	1,50 + 1,60	3,30	3,70			7,00 (2,70 - 9,80)	3,74 A			1.870 (640 - 2.930)	935	8,60
9[1] + 12	2,50	3,20			5,70 (1,90 - 6,90)	3,31 A			1.720 (270 - 2.320)	860	7,60	1,50 + 1,80	3,55	4,55			8,10 (2,70 - 9,90)	3,60 B			2.250 (630 - 2.930)	1.125	10,40
9[1] + 15	2,50	4,00			6,50 (1,90 - 6,90)	2,81 C			2.310 (270 - 2.280)	1.155	10,10	1,50 + 2,30	3,27	5,23			8,50 (2,70 - 9,90)	3,48 B			2.440 (620 - 2.930)	1.220	11,30
9[1] + 18	2,27	4,53			6,80 (1,90 - 7,50)	3,12 B			2.180 (260 - 2.350)	1.090	9,60	1,50 + 2,50	2,83	5,67			8,50 (2,80 - 10,20)	3,76 A			2.260 (560 - 2.890)	1.130	10,40
9[1] + 21	2,00	4,80			6,80 (1,90 - 7,50)	3,12 B			2.180 (260 - 2.350)	1.090	9,60	1,30 + 2,60	2,50	6,00			8,50 (2,80 - 10,20)	3,76 A			2.260 (560 - 2.890)	1.130	10,40
9[2] + 9[2]	2,80	2,80			5,60 (1,90 - 6,80)	3,26 A			1.720 (270 - 2.310)	860	7,60	1,60 + 1,60	4,00	4,00			8,00 (2,70 - 9,80)	3,54 B			2.260 (640 - 2.930)	1.130	10,40
9[2] + 12	2,80	3,20			6,00 (1,90 - 6,90)	3,09 B			1.940 (270 - 2.320)	970	8,50	1,60 + 1,80	3,97	4,53			8,50 (2,70 - 9,90)	3,48 B			2.440 (630 - 2.930)	1.220	11,30
9[2] + 15	2,80	4,00			6,80 (1,90 - 6,90)		5,60 A++[3]	6,80	2.650 (270 - 2.280)	340	11,60	1,60 + 2,30	3,50	5,00			8,50 (2,70 - 9,90)		3,80 A[3]	5,50	2.440 (620 - 2.930)	1.925	11,30
9[2] + 18	2,44	4,36			6,80 (1,90 - 7,50)	3,12 B			2.180 (260 - 2.350)	1.090	9,60	1,50 + 2,40	3,05	5,45			8,50 (2,80 - 10,20)	3,76 A			2.260 (560 - 2.890)	1.130	10,40
9[2] + 21	2,16	4,64			6,80 (1,90 - 7,50)	3,12 B			2.180 (260 - 2.350)	1.090	9,60	1,40 + 2,50	2,70	5,80			8,50 (2,80 - 10,20)	3,76 A			2.260 (560 - 2.890)	1.130	10,40
12 + 12	3,20	3,20			6,40 (1,90 - 7,00)	2,95 C			2.170 (270 - 2.280)	1.085	9,50	1,80 + 1,80	4,25	4,25			8,50 (2,80 - 10,00)	3,56 B			2.390 (640 - 2.930)	1.195	11,00
12 + 15	3,02	3,78			6,80 (1,90 - 7,10)	2,71 D			2.510 (270 - 2.370)	1.255	11,00	1,70 + 2,20	3,78	4,72			8,50 (2,80 - 10,00)	3,56 B			2.390 (600 - 2.930)	1.195	11,00
12 + 18	2,65	4,15			6,80 (2,00 - 7,60)	3,25 A			2.090 (280 - 2.360)	1.045	9,20	1,60 + 2,40	3,32	5,18			8,50 (2,80 - 10,30)	3,86 A			2.200 (540 - 2.880)	1.100	10,10
12 + 21	2,37	4,43			6,80 (2,00 - 7,60)	3,25 A			2.090 (280 - 2.360)	1.045	9,20	1,50 + 2,50	2,96	5,54			8,50 (2,80 - 10,30)	3,86 A			2.200 (540 - 2.880)	1.100	10,10
15 + 15	3,40	3,40			6,80 (1,90 - 7,10)	2,71 D			2.510 (260 - 2.330)	1.255	11,00	1,90 + 1,90	4,25	4,25			8,50 (2,80 - 10,00)	3,57 B			2.380 (600 - 2.890)	1.190	11,00
15 + 18	3,02	3,78			6,80 (2,00 - 7,60)	3,25 A			2.090 (280 - 2.310)	1.045	9,20	1,70 + 2,20	3,78	4,72			8,50 (2,80 - 10,30)	3,88 A			2.190 (540 - 2.870)	1.095	10,10
15 + 21	2,72	4,08			6,80 (2,00 - 7,60)	3,25 A			2.090 (280 - 2.310)	1.045	9,20	1,60 + 2,30	3,40	5,10			8,50 (2,80 - 10,30)	3,88 A			2.190 (540 - 2.870)	1.095	10,10
18 + 18	3,40	3,40			6,80 (2,10 - 8,10)	3,66 A			1.860 (320 - 2.370)	930	8,20	1,90 + 1,90	4,25	4,25			8,50 (2,80 - 10,50)	4,15 A			2.050 (510 - 2.780)	1.025	9,50
18 + 21	3,09	3,71			6,80 (2,10 - 8,10)	3,66 A			1.860 (320 - 2.370)	930	8,20	1,70 + 2,20	3,86	4,64			8,50 (2,80 - 10,50)	4,15 A			2.050 (510 - 2.780)	1.025	9,50
3 Rooms																							
5 + 5 + 5	1,60	1,60	1,60		4,80 (1,90 - 8,00)	4,71 A			1.020 (270 - 2.500)	510	4,60	1,00 + 1,00 + 1,00	2,60	2,60	2,60		7,80 (3,30 - 10,40)	4,11 A			1.900 (640 - 2.860)	950	8,80
5 + 5 + 7	1,60	1,60	2,00		5,20 (1,90 - 8,00)	4,48 A			1.160 (270 - 2.460)	580	5,20	1,00 + 1,00 + 1,30	2,58	2,58	3,24		8,40 (3,30 - 10,40)	3,96 A			2.120 (640 - 2.850)	1.060	9,80
5 + 5 + 9[1]	1,60	1,60	2,50		5,70 (1,90 - 8,00)	4,10 A			1.390 (270 - 2.460)	695	6,20	1,00 + 1,00 + 1,50	2,39	2,39	3,72		8,50 (3,30 - 10,40)	3,94 A			2.160 (640 - 2.850)	1.080	10,00
5 + 5 + 9[2]	1,60	1,60	2,80		6,00 (1,90 - 8,00)	3,97 A			1.510 (270 - 2.460)	755	6,70	1,00 + 1,00 + 1,60	2,27	2,27	3,96		8,50 (3,30 - 10,40)	3,94 A			2.160 (640 - 2.850)	1.080	10,00
5 + 5 + 12	1,60	1,60	3,20		6,40 (1,90 - 8,00)	3,81 A			1.680 (270 - 2.370)	840	7,50	1,00 + 1,00 + 1,80	2,13	2,13	4,24		8,50 (3,30 - 10,40)	4,05 A			2.100 (630 - 2.830)	1.050	9,70
5 + 5 + 15	1,51	1,51	3,78		6,80 (1,90 - 8,10)	3,56 A			1.910 (270 - 2.460)	955	8,40	1,00 + 1,00 + 2,20	1,89	1,89	4,72		8,50 (3,30 - 10,50)	4,07 A			2.090 (620 - 2.860)	1.045	9,60
5 + 5 + 18	1,33	1,33	4,14		6,80 (2,00 - 8,50)	3,84 A			1.770 (320 - 2.420)	885	7,80	0,80 + 0,80 + 2,40	1,66	1,66	5,18		8,50 (3,20 - 10,60)	4,34 A			1.960 (600 - 2.720)	980	9,00
5 + 5 + 21	1,18	1,18	4,44		6,80 (2,00 - 8,50)	3,84 A			1.770 (320 - 2.420)	885	7,80	0,70 + 0,70 + 2,50	1,48	1,48	5,54		8,50 (3,20 - 10,60)	4,34 A			1.960 (600 - 2.720)	980	9,00
5 + 7 + 7	1,60	2,00	2,00		5,60 (1,90 - 8,00)	4,27 A			1.310 (270 - 2.460)	655	5,80	1,00 + 1,30 + 1,30	2,42	3,04	3,04		8,50 (3,30 - 10,40)	3,95 A			2.150 (630 - 2.840)	1.075	9,90
5 + 7 + 9[1]	1,60	2,00	2,50		6,10 (1,90 - 8,00)	3,91 A			1.560 (270 - 2.460)	780	6,90	1,00 + 1,30 + 1,50	2,23	2,79	3,48		8,50 (3,30 - 10,40)	3,95 A			2.150 (630 - 2.840)	1.075	9,90
5 + 7 + 9[2]	1,60	2,00	2,80		6,40 (1,90 - 8,00)	3,70 A			1.730 (270 - 2.460)	865	7,70	1,00 + 1,30 + 1,60	2,12	2,66	3,72		8,50 (3,30 - 10,40)	3,95 A			2.150 (630 - 2.840)	1.075	9,90
5 + 7 + 12	1,60	2,00	3,20		6,80 (1,90 - 8,00)		6,4 A++[3]	6,80	1.910 (270 - 2.370)	340	8,40	1,00 + 1,30 + 1,80	2,00	2,50	4,00		8,50 (3,30 - 10,40)		3,80 A[3]	5,50	2.090 (620 - 2.780)	1.925	9,60
5 + 7 + 15	1,43	1,79	3,58		6,80 (1,90 - 8,10)	3,56 A			1.910 (270 - 2.420)	955	8,40	0,90 + 1,20 + 2,10	1,79	2,24	4,47		8,50 (3,30 - 10,50)	4,09 A			2.080 (620 - 2.810)	1.040	9,60
5 + 7 + 18	1,27	1,58	3,95		6,80 (2,00 - 8,50)	3,95 A			1.720 (320 - 2.420)	860	7,60	0,80 + 1,00 + 2,30	1,58	1,98	4,94		8,50 (3,20 - 10,60)	4,36 A			1.950 (600 - 2.710)	975	9,00
5 + 7 + 21	1,13	1,42	4,25		6,80 (2,00 - 8,50)	3,95 A			1.720 (320 - 2.420)	860	7,60	0,70 + 0,90 + 2,40	1,42	1,77	5,31		8,50 (3,20 - 10,60)	4,36 A			1.950 (600 - 2.710)	975	9,00
5 + 9[1] + 9[1]	1,60	2,50	2,50		6,60 (1,90 - 8,00)	3,63 A			1.820 (270 - 2.460)	910	8,00	1,00 + 1,50 + 1,50	2,06	3,22	3,22		8,50 (3,30 - 10,40)	3,95 A			2.150 (630 - 2.840)	1.075	9,90
5 + 9[1] + 9[2]	1,58	2,46	2,76		6,80 (1,90 - 8,00)		6,00 A++[3]	6,80	1.950 (270 - 2.460)	340	8,60	1,00 + 1,50 + 1,60	1,97	3,08	3,45		8,50 (3,30 - 10,40)		3,80 A[3]	5,50	2.150 (630 - 2.840)	1.925	9,90
5 + 9[1] + 12	1,49	2,33	2,98		6,80 (1,90 - 8,00)	3,56 A			1.910 (270 - 2.370)	955	8,40	0,90 + 1,50 + 1,70	1,86	2,91	3,73		8,50 (3,30 - 10,40)	4,07 A			2.090 (620 - 2.780)	1.045	9,60
5 + 9[1] + 15	1,34	2,10	3,36		6,80 (1,90 - 8,10)	3,56 A			1.910 (270 - 2.420)	955	8,40	0,80 + 1,40 + 1,90	1,68	2,62	4,20		8,50 (3,30 - 10,50)	4,09 A			2.080 (620 - 2.810)	1.040	9,60
5 + 9[1] + 18	1,19	1,87	3,74		6,80 (2,00 - 8,50)	3,95 A			1.720 (320 - 2.420)	860	7,60	0,70 + 1,20 + 2,20	1,49	2,34	4,67		8,50 (3,20 - 10,60)	4,36 A			1.950 (600 - 2.710)	975	9,00
5 + 9[1] + 21	1,08	1,68	4,04		6,80 (2,00 - 8,50)	3,95 A			1.720 (320 - 2.420)	860	7,60	0,70 + 1,10 + 2,30	1,35	2,10	5,05		8,50 (3,20 - 10,60)	4,36 A			1.950 (600 - 2.710)	975	9,00
5 + 9[2] + 9[2]	1,52	2,64	2,64		6,80 (1,90 - 8,00)	3,49 A			1.950 (270 - 2.460)	975	8,60	1,00 + 1,60 + 1,60	1,88	3,31	3,31		8,50 (3,30 - 10,40)	3,95 A			2.150 (630 - 2.840)	1.075	9,90
5 + 9[2] + 12	1,43	2,51	2,86		6,80 (1,90 - 8,00)	3,56 A			1.910 (270 - 2.370)	955	8,40	0,90 + 1,50 + 1,70	1,79	3,13	3,58		8,50 (3,30 - 10,40)	4,07 A			2.090 (620 - 2.780)	1.045	9,60
5 + 9[2] + 15	1,29	2,27	3,24		6,80 (1,90 - 8,10)	3,56 A			1.910 (270 - 2.420)	955	8,40	0,80 + 1,50 + 1,80	1,62	2,83	4,05		8,50 (3,30 - 10,50)	4,09 A			2.080 (620 - 2.810)	1.040	9,60
5 + 9[2] + 18	1,15	2,03	3,62		6,80 (2,00 - 8,50)	3,95 A			1.720 (320 - 2.420)	860	7,60	0,70 + 1,30 + 2,10	1,45	2,53	4,52		8,50 (3,20 - 10,60)	4,36 A			1.950 (600 - 2.710)	975	9,00
5 + 9[2] + 21	1,05	1,83	3,92		6,80 (2,00 - 8,50)	3,95 A			1.720 (320 - 2.420)	860	7,60	0,70 + 1,20 + 2,30	1,31	2,29	4,90		8,50 (3,20 - 10,60)	4,36 A			1.950 (600 - 2.710)	975	9,00
5 + 12 + 12	1,36	2,72	2,72		6,80 (1,90 - 8,10)	3,66 A			1.860 (290 - 2.370)	930	8,20	0,90 + 1,60 + 1,60	1,70	3,40	3,40		8,50 (3,30 - 10,50)	4,11 A			2.070 (640 - 2.790)	1.035	9,50
5 + 12 + 15	1,24	2,47	3,09		6,80 (1,90 - 8,20)	3,66 A			1.860 (290 - 2.420)	930	8,20	0,80 + 1,50 + 1,70	1,55	3,09	3,86		8,50 (3,30 - 10,50)	4,13 A			2.060 (640 - 2.790)	1.030	9,50
5 + 12 + 18	1,11	2,22	3,47		6,80 (2,00 - 8,50)	3,95 A			1.720 (340 - 2.380)	860	7,60	0,70 + 1,40 + 2,00	1,38	2,78	4,34		8,50 (3,20 - 10,60)	4,40 A			1.930 (600 - 2.680)	965	8,90
5 + 12 + 21	1,01	2,01	3,78		6,80 (2,00 - 8,50)	3,95 A			1.720 (340 - 2.380)	860	7,60	0,70 + 1,30 + 2,20	1,26	2,52	4,72		8,50 (3,20 - 10,60)	4,40 A			1.930 (600 - 2.680)	965	8,90
5 + 15 + 15	1,14	2,83	2,83		6,80 (1,90 - 8,20)	3,66 A			1.860 (290 - 2.420)	930	8,20	0,70 + 1,70 + 1,70	1,42	3,54	3,54		8,50 (3,30 - 10,50)	4,15 A			2.050 (640 - 2.780)	1.025	9,50
5 + 15 + 18	1,02	2,57	3,21		6,80 (2,00 - 8,50)	3,95 A			1.720 (340 - 2.330)	860	7,60	0,70 + 1,60 + 1,80	1,28	3,21	4,01		8,50 (3,20 - 10,60)	4,43 A			1.920 (600 - 2.670)	960	8,90
7 + 7 + 7	2,00	2,00	2,00		6,00 (1,90 - 8,00)	3,97 A			1.510 (270 - 2.410)	755	6,70	1,30 + 1,30 + 1,30	2,83	2,83	2,83		8,49 (3,30 - 10,40)	4,02 A			2.110 (630 - 2.830)	1.055	9,70
7 + 7 + 9[1]	2,00	2,00	2,50		6,50 (1,90 - 8,00)	3,67 A			1.770 (270 - 2.410)	885	7,80	1,30 + 1,30 + 1,50	2,62	2,62	3,26		8,50 (3,30 - 10,40)	4,03 A			2.110 (630 - 2.830)	1.055	9,70
7 + 7 + 9[2]	2,00	2,00	2,80		6,80 (1,90 - 8,00)		6,40 A++[3]	6,80	1.910 (270 - 2.410)	340	8,40	1,30 + 1,30 + 1,60	2,50	2,50	3,50		8,50 (3,30 - 10,40)		3,80 A[3]	5,50	2.110 (630 - 2.830)	1.925	9,70
7 + 7 + 12	1,89	1,89	3,02		6,80 (1,90 - 8,00)	3,56 A			1.910 (270 - 2.320)	955	8,40	1,20 + 1,20 + 1,70	2,36	2,36	3,78		8,50 (3,30 - 10,40)	4,09 A			2.080 (620 - 2.770)	1.040	9,60
7 + 7 + 15	1,70	1,70	3,40		6,80 (1,90 - 8,10)	3,66 A			1.860 (290 - 2.420)	930	8,20	1,10 + 1,10 + 1,90	2,13	2,13	4,24		8,50 (3,30 - 10,50)	4,11 A			2.070 (620 - 2.800)	1.035	9,50
7 + 7 + 18	1,51	1,51	3,78		6,80 (2,00 - 8,50)	3,95 A			1.720 (340 - 2.380)	860	7,60	1,00 + 1,00 + 2,20	1,89	1,89	4,72		8,50 (3,20 - 10,60)	4,38 A			1.940 (600 - 2.700)	970	8,90
7 + 7 + 21	1,36	1,36	4,08		6,80 (2,00 - 8,50)	3,95 A			1.720 (340 - 2.380)	860	7,60	0,90 + 0,90 + 2,30	1,70	1,70	5,10		8,50 (3,20 - 10,60)	4,38 A			1.940 (600 - 2.700)	970	8,90
7 + 9[1] + 9[1]	1,94	2,43	2,43		6,80 (1,90 - 8,00)		6,40 A++[3]	6,80	1.910 (270 - 2.410)	340	8,40	1,30 + 1,50 + 1,50	2,42	3,04	3,04		8,50 (3,30 - 10,40)		3,80 A[3]	5,50	2.110 (630 - 2.830)	1.925	9,70
7 + 9[1] + 9[2]	1,86	2,33	2,61		6,80 (1,90 - 8,00)	3,56 A			1.910 (270 - 2.410)	955	8,40	1,20 + 1,50 + 1,60	2,33	2,91	3,26		8,50 (3,30 - 10,40)	4,03 A			2.110 (630 - 2.830)	1.055	9,70
7 + 9[1] + 12	1,76	2,21	2,83		6,80 (1,90 - 8,00)	3,56 A			1.910 (270 - 2.320)	955	8,40	1,10 + 1,40 + 1,70	2,21	2,76	3,53		8,50 (3,30 - 10,40)	4,09 A			2.080 (620 - 2.770)	1.040	9,60
7 + 9[1] + 15	1,60	2,00	3,20		6,80 (1,90 - 8,10)	3,66 A			1.860 (290 - 2.420)	930	8,20	1,00 + 1,30 + 1,80	2,00	2,50	4,00		8,50 (3,30 - 10,50)	4,11 A			2.070 (620 - 2.800)	1.035	9,50
7 + 9[1] + 18	1,43	1,79	3,58		6,80 (2,00 - 8,50)	3,95 A			1.720 (340 - 2.380)	860	7,60	0,90 + 1,20 + 2,10	1,79	2,24	4,47		8,50 (3,20 - 10,60)	4,38 A			1.940 (600 - 2.700)	970	8,90
7 + 9[1] + 21	1,29	1,62	3,89		6,80 (2,00 - 8,50)	3,95 A			1.720 (340 - 2.380)	860	7,60	0,80 + 1,00 + 2,30	1,62	2,02	4,86		8,50 (3,20 - 10,60)	4,38 A			1.940 (600 - 2.700)	970	8,90
7 + 9[2] + 9[2]	1,78	2,51	2,51		6,80 (1,90 - 8,00)	3,56 A			1.910 (270 - 2.410)	955	8,40	1,10 + 1,50 + 1,50	2,24	3,13	3,13		8,50 (3,30 - 10,40)	4,03 A			2.110 (630 - 2.830)	1.055	9,70
7 + 9[2] + 12	1,70	2,38	2,72		6,80 (1,90 - 8,00)	3,56 A			1.910 (270 - 2.320)	955	8,40	1,10 + 1,50 + 1,60	2,12	2,98	3,40		8,50 (3,30 - 10,40)	4,09 A			2.080 (620 - 2.770)	1.040	9,60
7 + 9[2] + 15	1,55	2,16	3,09		6,80 (1,90 - 8,10)	3,66 A			1.860 (290 - 2.420)	930	8,20	1,00 + 1,40 + 1,70	1,93	2,70	3,87		8,50 (3,30 - 10,50)	4,11 A			2.070 (620 - 2.800)	1.035	9,50
7 + 9[2] + 18	1,39	1,94	3,47		6,80 (2,00 - 8,50)	3,95 A			1.720 (340 - 2.380)	860	7,60	0,90 + 1,30 + 2,00	1,73	2,43	4,34		8,50 (3,20 - 10,60)	4,38 A			1.940 (600 - 2.700)	970	8,90
7 + 9[2] + 21	1,26	1,76	3,78		6,80 (2,00 - 8,50)	3,95 A			1.720 (340 - 2.380)	860	7,60	0,80 + 1,10 + 2,20	1,57	2,20	4,73		8,50 (3,20 - 10,60)	4,38 A			1.940 (600 - 2.700)	970	8,90
7 + 12 + 12	1,62	2,59	2,59		6,80 (1,90 - 8,10)	3,66 A			1.860 (290 - 2.330)	930	8,20	1,00 + 1,60 + 1,60	2,02	3,24	3,24		8,50 (3,30 - 10,50)	4,13 A			2.060 (640 - 2.790)	1.030	9,50
7 + 12 + 15	1,47	2,37	2,96		6

Free Multi 4x1 CU-4E23PBE. Minimum capacity connected: 4,5 kW. Maximum capacity connected: 11,0 kW

Indoor unit capacity	Cooling capacity (kW) Rooms					EER	SEER	Pdesign	Input power rating	Annual consumption	Current	Moisture removal	Heating capacity (kW) Rooms					COP	SCOP	Pdesign at -10°C	Input power rating	Annual consumption	Current
	Room A	Room B	Room C	Room D	Total (Min - Max)	W/W	W/W	kWh	W	kWh	230V (A)	Volume (l/h)	Room A	Room B	Room C	Room D	Total (Min - Max)	W/W	W/W	kWh	W	kWh	230V (A)
4 Rooms																							
5 + 5 + 5 + 5	1,60	1,60	1,60	1,60	6,40 (1,90 - 8,70)	4,24 A			1.510 (340 - 2.380)	755	6,70	1,00 + 1,00 + 1,00 + 1,00	2,12	2,12	2,12	2,12	8,48 (3,00 - 10,60)	4,44 A			1.910 (580 - 2.610)	955	8,80
5 + 5 + 5 + 7	1,60	1,60	1,60	2,00	6,80 (1,90 - 8,80)		7,00 A+++ [3]	6,80	1.680 (340 - 2.470)	340	7,50	1,00 + 1,00 + 1,00 + 1,30	2,00	2,00	2,00	2,50	8,50 (3,00 - 10,60)		4,00 A+ [3]	5,50	1.900 (580 - 2.600)	1.925	8,80
5 + 5 + 5 + 9[1]	1,49	1,49	1,49	2,33	6,80 (1,90 - 8,80)	4,05 A			1.680 (340 - 2.470)	840	7,50	0,90 + 0,90 + 0,90 + 1,50	1,86	1,86	1,86	2,92	8,50 (3,00 - 10,60)	4,47 A			1.900 (580 - 2.600)	950	8,80
5 + 5 + 5 + 9[2]	1,43	1,43	1,43	2,51	6,80 (1,90 - 8,80)	4,05 A			1.680 (340 - 2.470)	840	7,50	0,90 + 0,90 + 0,90 + 1,50	1,79	1,79	1,79	3,13	8,50 (3,00 - 10,60)	4,47 A			1.900 (580 - 2.600)	950	8,80
5 + 5 + 5 + 12	1,36	1,36	1,36	2,72	6,80 (1,90 - 8,80)	4,05 A			1.680 (340 - 2.380)	840	7,50	0,90 + 0,90 + 0,90 + 1,60	1,70	1,70	1,70	3,40	8,50 (3,00 - 10,60)	4,52 A			1.880 (580 - 2.580)	940	8,70
5 + 5 + 5 + 15	1,24	1,24	1,24	3,08	6,80 (1,90 - 8,80)	4,15 A			1.640 (340 - 2.380)	820	7,30	0,80 + 0,80 + 0,80 + 1,70	1,55	1,55	1,55	3,85	8,50 (3,00 - 10,60)	4,55 A			1.870 (580 - 2.570)	935	8,60
5 + 5 + 5 + 18	1,11	1,11	1,11	3,47	6,80 (1,90 - 8,80)	4,15 A			1.640 (400 - 2.240)	820	7,30	0,70 + 0,70 + 0,70 + 2,00	1,39	1,39	1,39	4,33	8,50 (3,00 - 10,60)	4,64 A			1.830 (650 - 2.470)	915	8,40
5 + 5 + 5 + 21	1,01	1,01	1,01	3,77	6,80 (1,90 - 8,80)	4,15 A			1.640 (400 - 2.240)	820	7,30	0,70 + 0,70 + 0,70 + 2,20	1,26	1,26	1,26	4,72	8,50 (3,00 - 10,60)	4,64 A			1.830 (650 - 2.470)	915	8,40
5 + 5 + 7 + 7	1,51	1,51	1,89	1,89	6,80 (1,90 - 8,80)	4,05 A			1.680 (340 - 2.430)	840	7,50	1,00 + 1,00 + 1,20 + 1,20	1,89	1,89	2,36	2,36	8,50 (3,10 - 10,60)	4,50 A			1.890 (600 - 2.590)	945	8,70
5 + 5 + 7 + 9[1]	1,41	1,41	1,77	2,21	6,80 (1,90 - 8,80)	4,05 A			1.680 (340 - 2.430)	840	7,50	0,90 + 0,90 + 1,10 + 1,40	1,77	1,77	2,20	2,76	8,50 (3,10 - 10,60)	4,50 A			1.890 (600 - 2.590)	945	8,70
5 + 5 + 7 + 9[2]	1,36	1,36	1,70	2,38	6,80 (1,90 - 8,80)	4,05 A			1.680 (340 - 2.430)	840	7,50	0,90 + 0,90 + 1,10 + 1,50	1,70	1,70	2,12	2,98	8,50 (3,10 - 10,60)	4,50 A			1.890 (600 - 2.590)	945	8,70
5 + 5 + 7 + 12	1,30	1,30	1,61	2,59	6,80 (1,90 - 8,80)	4,15 A			1.640 (340 - 2.380)	820	7,30	0,80 + 0,80 + 1,00 + 1,60	1,62	1,62	2,02	3,24	8,50 (3,00 - 10,60)	4,55 A			1.870 (580 - 2.570)	935	8,60
5 + 5 + 7 + 15	1,18	1,18	1,48	2,96	6,80 (1,90 - 8,80)	4,15 A			1.640 (370 - 2.380)	820	7,30	0,70 + 0,70 + 0,90 + 1,70	1,48	1,48	1,84	3,70	8,50 (3,00 - 10,60)	4,57 A			1.860 (600 - 2.560)	930	8,60
5 + 5 + 7 + 18	1,07	1,07	1,33	3,33	6,80 (1,90 - 8,80)	4,15 A			1.640 (400 - 2.200)	820	7,30	0,70 + 0,70 + 0,80 + 1,90	1,33	1,33	1,67	4,17	8,50 (3,00 - 10,60)	4,64 A			1.830 (660 - 2.460)	915	8,40
5 + 5 + 9[1] + 9[1]	1,33	1,33	2,07	2,07	6,80 (1,90 - 8,80)	4,05 A			1.680 (340 - 2.430)	840	7,50	0,80 + 0,80 + 1,30 + 1,30	1,66	1,66	2,59	2,59	8,50 (3,10 - 10,60)	4,50 A			1.890 (600 - 2.590)	945	8,70
5 + 5 + 9[1] + 9[2]	1,28	1,28	2,00	2,24	6,80 (1,90 - 8,80)	4,05 A			1.680 (340 - 2.430)	840	7,50	0,80 + 0,80 + 1,30 + 1,50	1,60	1,60	2,50	2,80	8,50 (3,10 - 10,60)	4,50 A			1.890 (600 - 2.590)	945	8,70
5 + 5 + 9[1] + 12	1,22	1,22	1,91	2,45	6,80 (1,90 - 8,80)	4,15 A			1.640 (340 - 2.380)	820	7,30	0,80 + 0,80 + 1,20 + 1,50	1,53	1,53	2,38	3,06	8,50 (3,00 - 10,60)	4,55 A			1.870 (580 - 2.570)	935	8,60
5 + 5 + 9[1] + 15	1,12	1,12	1,76	2,80	6,80 (1,90 - 8,80)	4,15 A			1.640 (370 - 2.380)	820	7,30	0,70 + 0,70 + 1,10 + 1,60	1,40	1,40	2,19	3,51	8,50 (3,00 - 10,60)	4,57 A			1.860 (600 - 2.560)	930	8,60
5 + 5 + 9[1] + 18	1,02	1,02	1,58	3,18	6,80 (1,90 - 8,80)	4,15 A			1.640 (400 - 2.200)	820	7,30	0,70 + 0,70 + 1,00 + 1,80	1,27	1,27	1,99	3,97	8,50 (3,00 - 10,60)	4,64 A			1.830 (660 - 2.460)	915	8,40
5 + 5 + 9[2] + 9[2]	1,24	1,24	2,16	2,16	6,80 (1,90 - 8,80)	4,05 A			1.680 (340 - 2.430)	840	7,50	0,80 + 0,80 + 1,40 + 1,40	1,55	1,55	2,70	2,70	8,50 (3,10 - 10,60)	4,50 A			1.890 (600 - 2.590)	945	8,70
5 + 5 + 9[2] + 12	1,18	1,18	2,07	2,37	6,80 (1,90 - 8,80)	4,15 A			1.640 (340 - 2.380)	820	7,30	0,70 + 0,70 + 1,30 + 1,50	1,48	1,48	2,58	2,96	8,50 (3,00 - 10,60)	4,55 A			1.870 (580 - 2.570)	935	8,60
5 + 5 + 9[2] + 15	1,09	1,09	1,90	2,72	6,80 (1,90 - 8,80)	4,15 A			1.640 (370 - 2.380)	820	7,30	0,70 + 0,70 + 1,20 + 1,60	1,36	1,36	2,38	3,40	8,50 (3,00 - 10,60)	4,57 A			1.860 (600 - 2.560)	930	8,60
5 + 5 + 9[2] + 18	0,99	0,99	1,73	3,09	6,80 (1,90 - 8,80)	4,15 A			1.640 (400 - 2.200)	820	7,30	0,70 + 0,70 + 1,10 + 1,70	1,24	1,24	2,16	3,86	8,50 (3,00 - 10,60)	4,64 A			1.830 (660 - 2.460)	915	8,40
5 + 5 + 12 + 12	1,13	1,13	2,27	2,27	6,80 (1,90 - 8,80)	4,15 A			1.640 (370 - 2.330)	820	7,30	0,70 + 0,70 + 1,50 + 1,50	1,42	1,42	2,83	2,83	8,50 (3,00 - 10,60)	4,59 A			1.850 (610 - 2.540)	925	8,50
5 + 5 + 12 + 15	1,05	1,05	2,08	2,62	6,80 (1,90 - 8,80)	4,15 A			1.640 (370 - 2.330)	820	7,30	0,70 + 0,70 + 1,30 + 1,60	1,31	1,31	2,61	3,27	8,50 (3,00 - 10,60)	4,62 A			1.840 (610 - 2.530)	920	8,50
5 + 7 + 7 + 7	1,43	1,79	1,79	1,79	6,80 (1,90 - 8,80)	4,05 A			1.680 (340 - 2.430)	840	7,50	0,90 + 1,20 + 1,20 + 1,20	1,78	2,24	2,24	2,24	8,50 (3,10 - 10,60)	4,52 A			1.880 (600 - 2.580)	940	8,70
5 + 7 + 7 + 9[1]	1,34	1,68	1,68	2,10	6,80 (1,90 - 8,80)	4,05 A			1.680 (340 - 2.430)	840	7,50	0,80 + 1,10 + 1,10 + 1,40	1,68	2,10	2,10	2,62	8,50 (3,10 - 10,60)	4,52 A			1.880 (600 - 2.580)	940	8,70
5 + 7 + 7 + 9[2]	1,29	1,62	1,62	2,27	6,80 (1,90 - 8,80)	4,05 A			1.680 (340 - 2.430)	840	7,50	0,80 + 1,00 + 1,00 + 1,50	1,62	2,02	2,02	2,84	8,50 (3,10 - 10,60)	4,52 A			1.880 (600 - 2.580)	940	8,70
5 + 7 + 7 + 12	1,23	1,55	1,55	2,47	6,80 (1,90 - 8,80)	4,15 A			1.640 (370 - 2.380)	820	7,30	0,80 + 1,00 + 1,00 + 1,50	1,55	1,93	1,93	3,09	8,50 (3,00 - 10,60)	4,57 A			1.860 (600 - 2.560)	930	8,60
5 + 7 + 7 + 15	1,13	1,42	1,42	2,83	6,80 (1,90 - 8,80)	4,15 A			1.640 (370 - 2.380)	820	7,30	0,70 + 0,90 + 0,90 + 1,70	1,42	1,77	1,77	3,54	8,50 (3,00 - 10,60)	4,57 A			1.860 (610 - 2.550)	930	8,60
5 + 7 + 7 + 18	1,03	1,28	1,28	3,21	6,80 (1,90 - 8,80)	4,15 A			1.640 (420 - 2.200)	820	7,30	0,70 + 0,80 + 0,80 + 1,80	1,28	1,60	1,60	4,02	8,50 (3,00 - 10,60)	4,67 A			1.820 (680 - 2.450)	910	8,40
5 + 7 + 9[1] + 9[1]	1,26	1,58	1,98	1,98	6,80 (1,90 - 8,80)	4,05 A			1.680 (340 - 2.430)	840	7,50	0,80 + 1,00 + 1,30 + 1,30	1,58	1,98	2,47	2,47	8,50 (3,10 - 10,60)	4,52 A			1.880 (600 - 2.580)	940	8,70
5 + 7 + 9[1] + 9[2]	1,22	1,53	1,91	2,14	6,80 (1,90 - 8,80)	4,05 A			1.680 (340 - 2.430)	840	7,50	0,80 + 1,00 + 1,20 + 1,40	1,53	1,91	2,39	2,67	8,50 (3,10 - 10,60)	4,52 A			1.880 (600 - 2.580)	940	8,70
5 + 7 + 9[1] + 12	1,17	1,46	1,83	2,34	6,80 (1,90 - 8,80)	4,15 A			1.640 (370 - 2.380)	820	7,30	0,70 + 0,90 + 1,20 + 1,50	1,46	1,83	2,28	2,93	8,50 (3,00 - 10,60)	4,57 A			1.860 (600 - 2.560)	930	8,60
5 + 7 + 9[1] + 15	1,08	1,35	1,68	2,69	6,80 (1,90 - 8,80)	4,15 A			1.640 (370 - 2.380)	820	7,30	0,70 + 0,90 + 1,10 + 1,60	1,35	1,68	2,10	3,37	8,50 (3,00 - 10,60)	4,57 A			1.860 (610 - 2.550)	930	8,60
5 + 7 + 9[2] + 9[2]	1,18	1,48	2,07	2,07	6,80 (1,90 - 8,80)	4,05 A			1.680 (340 - 2.430)	840	7,50	0,70 + 0,90 + 1,30 + 1,30	1,47	1,85	2,59	2,59	8,50 (3,10 - 10,60)	4,52 A			1.880 (600 - 2.580)	940	8,70
5 + 7 + 9[2] + 12	1,13	1,42	1,98	2,27	6,80 (1,90 - 8,80)	4,15 A			1.640 (370 - 2.380)	820	7,30	0,70 + 0,90 + 1,30 + 1,50	1,42	1,77	2,48	2,83	8,50 (3,00 - 10,60)	4,57 A			1.860 (600 - 2.560)	930	8,60
5 + 7 + 9[2] + 15	1,04	1,31	1,83	2,62	6,80 (1,90 - 8,80)	4,15 A			1.640 (370 - 2.380)	820	7,30	0,70 + 0,80 + 1,20 + 1,60	1,31	1,63	2,29	3,27	8,50 (3,00 - 10,60)	4,57 A			1.860 (610 - 2.550)	930	8,60
5 + 7 + 12 + 12	1,08	1,36	2,18	2,18	6,80 (1,90 - 8,80)	4,15 A			1.640 (370 - 2.330)	820	7,30	0,70 + 0,90 + 1,40 + 1,40	1,36	1,70	2,72	2,72	8,50 (3,00 - 10,60)	4,62 A			1.840 (610 - 2.530)	920	8,50
5 + 7 + 12 + 15	1,01	1,26	2,01	2,52	6,80 (1,90 - 8,80)	4,15 A			1.640 (370 - 2.330)	820	7,30	0,70 + 0,80 + 1,30 + 1,50	1,26	1,57	2,52	3,15	8,50 (3,00 - 10,60)	4,62 A			1.840 (610 - 2.530)	920	8,50
5 + 9[1] + 9[1] + 9[1]	1,19	1,87	1,87	1,87	6,80 (1,90 - 8,80)	4,05 A			1.680 (340 - 2.430)	840	7,50	0,70 + 1,20 + 1,20 + 1,20	1,48	2,34	2,34	2,34	8,50 (3,10 - 10,60)	4,52 A			1.880 (600 - 2.580)	940	8,70
5 + 9[1] + 9[1] + 9[2]	1,15	1,81	1,81	2,03	6,80 (1,90 - 8,80)	4,05 A			1.680 (340 - 2.430)	840	7,50	0,70 + 1,20 + 1,20 + 1,30	1,45	2,26	2,26	2,53	8,50 (3,10 - 10,60)	4,52 A			1.880 (600 - 2.580)	940	8,70
5 + 9[1] + 9[1] + 12	1,11	1,73	1,73	2,23	6,80 (1,90 - 8,80)	4,15 A			1.640 (370 - 2.380)	820	7,30	0,70 + 1,10 + 1,10 + 1,50	1,38	2,17	2,17	2,78	8,50 (3,00 - 10,60)	4,57 A			1.860 (600 - 2.560)	930	8,60
5 + 9[1] + 9[1] + 15	1,03	1,60	1,60	2,57	6,80 (1,90 - 8,80)	4,15 A			1.640 (370 - 2.380)	820	7,30	0,70 + 1,00 + 1,00 + 1,60	1,28	2,00	2,00	3,22	8,50 (3,00 - 10,60)	4,57 A			1.860 (610 - 2.550)	930	8,60
5 + 9[1] + 9[2] + 9[2]	1,12	1,76	1,96	1,96	6,80 (1,90 - 8,80)	4,05 A			1.680 (340 - 2.430)	840	7,50	0,70 + 1,10 + 1,30 + 1,30	1,40	2,20	2,45	2,45	8,50 (3,10 - 10,60)	4,52 A			1.880 (600 - 2.580)	940	8,70
5 + 9[1] + 9[2] + 12	1,08	1,68	1,89	2,15	6,80 (1,90 - 8,80)	4,15 A			1.640 (370 - 2.380)	820	7,30	0,70 + 1,10 + 1,20 + 1,40	1,35	2,10	2,36	2,69	8,50 (3,00 - 10,60)	4,57 A			1.860 (600 - 2.560)	930	8,60
5 + 9[1] + 9[2] + 15	0,99	1,56	1,75	2,50	6,80 (1,90 - 8,80)	4,15 A			1.640 (370 - 2.380)	820	7,30	0,70 + 1,00 + 1,10 + 1,50	1,25	1,95	2,18	3,12	8,50 (3,00 - 10,60)	4,57 A			1.860 (610 - 2.550)	930	8,60
5 + 9[1] + 12 + 12	1,04	1,62	2,07	2,07	6,80 (1,90 - 8,80)	4,15 A			1.640 (370 - 2.330)	820	7,30	0,70 + 1,00 + 1,30 + 1,30	1,30	2,02	2,59	2,59	8,50 (3,00 - 10,60)	4,62 A			1.840 (610 - 2.530)	920	8,50
5 + 9[2] + 9[2] + 9[2]	1,10	1,90	1,90	1,90	6,80 (1,90 - 8,80)	4,05 A			1.680 (340 - 2.430)	840	7,50	0,70 + 1,20 + 1,20 + 1,20	1,36	2,38	2,38	2,38	8,50 (3,10 - 10,60)	4,52 A			1.880 (600 - 2.580)	940	8,70
5 + 9[2] + 9[2] + 12	1,05	1,83	1,83	2,09	6,80 (1,90 - 8,80)	4,15 A			1.640 (370 - 2.380)	820	7,30	0,70 + 1,20 + 1,20 + 1,40	1,30	2,29	2,29	2,62	8,50 (3,00 - 10,60)	4,57 A			1.860 (600 - 2.560)	930	8,60
5 + 9[2] + 12 + 12	1,01	1,77	2,01	2,01	6,80 (1,90 - 8,80)	4,15 A			1.640 (370 - 2.330)	820	7,30	0,70 + 1,10 + 1,30 + 1,30	1,26	2,20	2,52	2,52	8,50 (3,00 - 10,60)	4,62 A			1.840 (610 - 2.530)	920	8,50
7 + 7 + 7 + 7	1,70	1,70	1,70	1,70	6,80 (1,90 - 8,80)	4,05 A			1.680 (340 - 2.380)	840	7,50	1,10 + 1,10 + 1,10 + 1,10	2,12	2,12	2,12	2,12	8,48 (3,10 - 10,60)	4,51 A			1.880 (600 - 2.570)	940	8,70
7 + 7 + 7 + 9[1]	1,60	1,60	1,60	2,00	6,80 (1,90 - 8,80)	4,05 A			1.680 (340 - 2.380)	840	7,50	1,00 + 1,00 + 1,00 + 1,30	2,00	2,00	2,00	2,50	8,50 (3,10 - 10,60)	4,52 A			1.880 (600 - 2.570)	940	8,70
7 + 7 + 7 + 9[2]	1,55	1,55	1,55	2,15	6,80 (1,90 - 8,80)	4,05 A			1.680 (340 - 2.380)	840	7,50	1,00 + 1,00 + 1,00 + 1,40	1,93	1,93	1,93	2,71	8,50 (3,10 - 10,60)	4,52 A			1.880 (600 - 2.570)	940	8,70
7 + 7 + 7 + 12	1,48	1,48	1,48	2,36	6,80 (1,90 - 8,80)	4,15 A			1.640 (370 - 2.330)	820	7,30	0,90 + 0,90 + 0,90 + 1,50	1,85	1,85	1,85	2,95	8,50 (3,00 - 10,60)	4,57 A			1.860 (610 - 2.550)	930	8,60
7 + 7 + 7 + 15	1,36	1,36	1,36	2,72	6,80 (1,90 - 8,80)	4,15 A			1.640 (370 - 2.330)	820	7,30	0,90 + 0,90 + 0,90 + 1,60	1,70	1,70	1,70	3,40	8,50 (3,00 - 10,60)	4,59 A			1.850 (610 - 2.540)	925	8,50
7 + 7 + 7 + 18	1,24	1,24	1,24	3,08	6,80 (1,90 - 8,80)	4,15 A			1.640 (420 - 2.200)	820	7,30	0,80 + 0,80 + 0,80 + 1,70	1,55	1,55	1,55	3,85	8,50 (3,00 - 10,60)	4,70 A			1.810 (680 - 2.440)	905	8,30
7 + 7 + 9[1] + 9[1]	1,51	1,51	1,89	1,89	6,80 (1,90 - 8,80)	4,05 A			1.680 (340 - 2.380)	840	7,50	1,00 + 1,00 + 1,20 + 1,20	1,89	1,89	2,36	2,36	8,50 (3,10 - 10,60)	4,52 A			1.880 (600 - 2.570)	940	8,70
7 + 7 + 9[1] + 9[2]	1,46	1,46	1,83	2,05	6,80 (1,90 - 8,80)	4,05 A			1.680 (340 - 2.380)	840	7,50	0,90 + 0,90 + 1,20 + 1,30	1,83	1,83	2,28	2,56	8,50 (3,10 - 10,60)	4,52 A			1.880 (600 - 2.570)	940	8,70
7 + 7 + 9[1] + 12	1,40	1,40	1,75	2,25	6,80 (1,90 - 8,80)	4,15 A			1.640 (370 - 2.330)	820	7,30	0,90 + 0,90 + 1,10 + 1,50	1,75	1,75	2,19	2,81	8,50 (3,00 - 10,60)	4,57 A			1.860 (610 - 2.550)	930	8,60
7 + 7 + 9[1] + 15	1,30	1,30	1,61	2,59	6,80 (1,90 - 8,80)	4,15 A			1.640 (370 - 2.330)	820	7,30	0,80 + 0,80 + 1,00 + 1,60	1,62	1,62	2,02	3,24	8,50 (3,00 - 10,60)	4,59 A			1.850 (610 - 2.540)	925	8,50
7 + 7 + 9[2] + 9[2]	1,42	1,42	1,98	1,98	6,80 (1,90 - 8,80)	4,05 A			1.680 (340 - 2.380)	840	7,50	0,90 + 0,90 + 1,30 + 1,30	1,77	1,77	2,48	2,48	8,50 (3,10 - 10,60)	4,52 A			1.880 (600 - 2.570)	940	8,70
7 + 7 + 9[2] + 12	1,36	1,36	1,90	2,18	6,80 (1,90 - 8,80)	4,15 A			1.640 (370 - 2.330)	820	7,30	0,90 + 0,90 + 1,20 + 1,40	1,70	1,70	2,38	2,72	8,50 (3,00 - 10,60)	4,57 A			1.860 (610 - 2.550)	930	8,60
7 + 7 + 9[2] + 15	1,26	1,26	1,76	2,52	6,80 (1,90 - 8,80)	4,15 A			1.640 (370 - 2.330)	820	7,30	0,80 + 0,80 + 1,10 + 1,50	1,57	1,57	2,20	3,16	8,50 (3,00 - 10,60)	4,59 A			1.850 (610 - 2.540)	925	8,50
7 + 7 + 12 + 12	1,31	1,31	2,09	2,09	6,80 (1,90 - 8,80)	4,15 A			1.640 (370 - 2.330)	820	7,30	0,80 + 0,80 + 1,40 + 1,40	1,63	1,63	2,62	2,62	8,50 (3,00 - 10,60)	4,62 A			1.840 (610 - 2.530)	920	8,50
7 + 9[1] + 9[1] + 9[1]	1,43	1,79	1,79	1,79	6,80 (1,90 - 8,80)	4,05 A			1.680 (340 - 2.380)	840	7,50	0,90 + 1,20 + 1,20 + 1,20	1,78	2,24	2,24	2,24	8,50 (3,10 - 10,60)	4,52 A			1.880 (600 - 2.570)	940	8,70
7 + 9[1] + 9[1] + 9[2]	1,39	1,73	1,73	1,95	6,80 (1,90 - 8,80)	4,05 A			1.680 (340 - 2.380)	840	7,50	0,90 + 1,10 + 1,10 + 1,30	1,73	2,17	2,17	2,43	8,50 (3,10 - 10,60)	4,52 A			1.880 (600 - 2.570)	940	8,70
7 + 9[1] + 9[1] + 12	1,33	1,67	1,67	2,13	6,80 (1,90 - 8,80)	4,15 A			1.640 (370 - 2.330)	820	7,30	0,80 + 1,10 + 1,10 + 1,40	1,67	2,08	2,08	2,67	8,50 (3,00 - 10,60)	4,57 A			1.860 (610 - 2.550)	930	8,60
7 + 9[1] + 9[1] + 15	1,23	1,55	1,55	2,47	6,80 (1,90 - 8,80)	4,15 A			1.640 (370 - 2.330)	820	7,30	0,80 + 1,00 + 1,00 + 1,50	1,55	1,93	1,93	3,09	8,50 (3,00 - 10,60)	4,59 A			1.850 (610 - 2.540)	925	8,50
7 + 9[1] + 9[2] + 9[2]	1,34	1,68	1,89	1,89	6,80 (1,90 - 8,80)	4,05 A			1.680 (340 - 2.380)	840	7,50	0,80 + 1,10 + 1,20 + 1,20	1,68	2,10	2,36	2,36	8,50 (3,10 - 10,60)	4,52 A			1.880 (600 - 2.570)	940	8,70
7 + 9[1] + 9[2] + 12	1,30	1,62	1,81	2,07	6,80 (1,90 - 8,80)	4,15 A			1.640 (370 - 2.330)	820	7,30	0,80 + 1,00 + 1,20 + 1,30	1,62	2,02	2,27	2,59	8,50 (3,00 - 10,60)	4,57 A			1.860 (610 - 2.550)	930	8,60
7 + 9[1] + 12 + 12	1,24	1,56	2,00	2,00	6,80 (1,90 - 8,80)	4,15 A			1.640 (370 - 2.330)	820	7,30	0,80 + 1,00 + 1,30 + 1,30	1,55	1,95	2,50	2,50	8,50 (3,00 - 10,60)	4,62 A			1.840 (610 - 2.530)	920	8,50
7 + 9[2] + 9[2] + 9[2]	1,31	1,83	1,83	1,83	6,80 (1,90 - 8,80)	4,05 A			1.680 (340 - 2.380)	840	7,50	0,80 + 1,20 + 1,20 + 1,20	1,63	2,29	2,29	2,29	8,50 (3,10 - 10,60)	4,52 A			1.880 (600 - 2.570)	940	8,70
7 + 9[2] + 9[2] + 12	1,26	1,76	1,76	2,02	6,80 (1,90 - 8,80)	4,15 A			1.640 (370 - 2.330)	820	7,30	0,80 + 1,10 + 1,10 + 1,30	1,57	2,20	2,20	2,53	8,50 (3,00 - 10,60)	4,57 A			1.860 (610 - 2.550)	930	8,60
9[1] + 9[1] + 9[1] + 9[1]	1,70	1,70	1,70	1,70	6,80 (1,90 - 8,80)	4,05 A			1.680 (340 - 2.380)	840	7,50	1,10 + 1,10 + 1,10 + 1,10	2,12	2,12	2,12	2,12	8,48 (3,10 - 10,60)	4,51 A			1.880 (600 - 2.570)	940	8,70
9[1] + 9[1] + 9[1] + 9[2]	1,65	1,65	1,65	1,85	6,80 (1,90 - 8,80)	4,05 A			1.680 (340 - 2.380)	840	7,50	1,10 + 1,10 + 1,10 + 1,20	2,06	2,06	2,06	2,32	8,50 (3,10 - 10,60)	4,52 A			1.880 (600 - 2.570)	940	8,70
9[1] + 9[1] + 9[1] + 12	1,59	1,59	1,59	2,03	6,80 (1,90 - 8,80)	4,15 A			1.640 (370 - 2.330)	820	7,30	1,00 + 1,00 + 1,00 + 1,30	1,99	1,99	1,99	2,53	8,50 (3,00 - 10,60)	4,57 A			1.860 (610 - 2.550)	930	8,60
9[1] + 9[1] + 9[2] + 9[2]	1,60	1,60	1,80	1,80	6,80 (1,90 - 8,80)	4,05 A			1.680 (340 - 2.380)	840	7,50	1,00 + 1,00 + 1,20 + 1,20	2,00	2,00	2,25	2,25	8,50 (3,10 - 10,60)	4,52 A			1.880 (600 - 2.570)	940	8,70
9[1] + 9[1] + 9[2] + 12	1,55	1,55	1,72	1,98	6,80 (1,90 - 8,80)	4,15 A			1.640 (370 - 2.330)	820	7,30	1,00 + 1,00 + 1,10 + 1,30	1,93	1,93	2,16	2,48	8,50 (3,00 - 10,60)	4,57 A			1.860 (610 - 2.550)	930	8,60
9[1] + 9[2] + 9[2] + 9[2]	1,55	1,75	1,75	1,75	6,80 (1,90 - 8,80)	4,05 A			1.680 (340 - 2.380)	840	7,50	1,00 + 1,10 + 1,10 + 1,10	1,96	2,18	2,18	2,18	8,50 (3,10 - 10,60)	4,52 A			1.880 (600 -

Free Multi combinations table

Free Multi 4x1 CU-4E27PBE. Minimum capacity connected: 4,5 kW. Maximum capacity connected: 13,6 kW

Indoor unit capacity	Cooling capacity (kW)					EER	SEER	Pdesign	Input power rating	Annual consumption	Current	Moisture removal	Heating capacity (kW)					COP	SCOP	Pdesign at -10°C	Input power rating	Annual consumption	Current
	Room A	Room B	Room C	Room D	Total (Min - Max)	W/W	W/W	kWh	W	kWh	230V (A)	Volume (l/h)	Room A	Room B	Room C	Room D	Total (Min - Max)	W/W	W/W	kWh	W	kWh	230V (A)
1 Room																							
5	1,60				1,60 (1,30 - 2,30)	4,00 A			400 (250 - 640)	200	2,00	1,00	2,60				2,60 (1,20 - 3,20)		4,33 A		600 (300 - 960)	300	3,00
7	2,00				2,00 (1,80 - 2,90)	4,00 A			500 (340 - 810)	250	2,50	1,30	3,20				3,20 (1,20 - 4,10)		4,32 A		740 (300 - 1.230)	370	3,70
9[1]	2,50				2,50 (1,80 - 2,90)	3,97 A			630 (340 - 810)	315	3,20	1,50	3,60				3,60 (1,20 - 4,30)		3,83 A		940 (300 - 1.230)	470	4,70
9[2]	2,80				2,80 (1,80 - 2,90)	4,00 A			700 (340 - 810)	350	3,50	1,60	4,00				4,00 (1,20 - 4,30)		3,81 A		1.050 (300 - 1.230)	525	5,20
12	3,20				3,20 (1,80 - 3,80)	4,00 A			800 (340 - 1.360)	400	3,90	1,80	4,50				4,50 (1,20 - 5,80)		3,66 A		1.230 (300 - 2.100)	615	6,00
15	4,00				4,00 (1,80 - 4,30)	3,23 A			1.240 (340 - 1.990)	620	5,80	2,30	5,60				5,60 (1,20 - 6,80)		3,26 C		1.720 (300 - 2.930)	860	8,00
18	5,00				5,00 (1,90 - 5,70)	3,23 A			1.550 (340 - 2.130)	775	7,20	2,70	6,80				6,80 (1,20 - 6,90)		3,24 C		2.100 (300 - 2.520)	1.050	9,70
21	6,00				6,00 (1,90 - 6,20)	2,96 C			2.030 (340 - 2.330)	1.015	9,20	3,30	8,50				8,50 (1,30 - 9,00)		3,54 B		2.400 (620 - 2.530)	1.200	11,10
24	7,00				7,00 (2,00 - 7,20)	2,81 C			2.490 (370 - 2.770)	1.245	11,30	4,00	8,70				8,70 (1,40 - 9,20)		3,41 B		2.550 (680 - 2.720)	1.275	11,80
2 Rooms																							
5 + 5	1,60	1,60			3,20 (2,40 - 5,80)	4,38 A			730 (380 - 1.990)	365	3,70	1,00 + 1,00	2,35	2,35			4,70 (2,20 - 8,20)		3,36 C		1.400 (440 - 2.910)	700	6,60
5 + 7	1,60	2,00			3,60 (2,40 - 5,80)	4,14 A			870 (380 - 1.990)	435	4,30	1,00 + 1,30	2,31	2,89			5,20 (2,20 - 8,20)		3,29 C		1.580 (440 - 2.900)	790	7,50
5 + 9[1]	1,60	2,50			4,10 (2,40 - 5,80)	3,83 A			1.070 (380 - 1.990)	535	5,20	1,00 + 1,50	2,19	3,41			5,60 (2,20 - 8,20)		3,24 C		1.730 (440 - 2.900)	865	8,20
5 + 9[2]	1,60	2,80			4,40 (2,40 - 5,80)	3,76 A			1.170 (380 - 1.990)	585	5,70	1,00 + 1,60	2,15	3,75			5,90 (2,20 - 8,20)		3,33 C		1.770 (440 - 2.900)	885	8,30
5 + 12	1,60	3,20			4,80 (2,40 - 5,80)	3,64 A			1.320 (370 - 1.920)	660	6,30	1,00 + 1,80	2,13	4,27			6,40 (2,20 - 8,20)		3,40 B		1.880 (390 - 2.820)	940	8,80
5 + 15	1,60	4,00			5,60 (2,40 - 5,80)	3,41 A			1.640 (370 - 1.860)	820	7,90	1,00 + 2,30	2,11	5,29			7,40 (2,20 - 8,60)		3,47 B		2.130 (380 - 2.920)	1.065	10,00
5 + 18	1,60	5,00			6,60 (2,40 - 7,20)	3,33 A			1.980 (350 - 2.480)	990	9,40	1,00 + 2,70	2,06	6,44			8,50 (2,20 - 10,00)		3,62 A		2.350 (330 - 3.330)	1.175	11,00
5 + 21	1,60	6,00			7,60 (2,40 - 8,50)	3,02 B			2.520 (350 - 3.490)	1.260	12,00	1,00 + 3,30	1,98	7,42			9,40 (2,20 - 10,00)		3,73 A		2.520 (330 - 3.330)	1.260	11,80
5 + 24	1,49	6,51			8,00 (2,40 - 8,50)	3,05 B			2.620 (350 - 3.340)	1.310	12,40	0,90 + 3,70	1,75	7,65			9,40 (2,20 - 10,30)		3,82 A		2.460 (330 - 3.500)	1.230	11,60
7 + 7	2,00	2,00			4,00 (2,40 - 5,80)	3,96 A			1.010 (380 - 1.930)	505	4,90	1,30 + 1,30	2,90	2,90			5,80 (2,20 - 8,20)		3,39 C		1.710 (400 - 2.890)	855	8,10
7 + 9[1]	2,00	2,50			4,50 (2,40 - 5,80)	3,69 A			1.220 (380 - 1.930)	610	5,90	1,30 + 1,50	2,71	3,39			6,10 (2,20 - 8,20)		3,39 C		1.800 (400 - 2.890)	900	8,50
7 + 9[2]	2,00	2,80			4,80 (2,40 - 5,80)	3,64 A			1.320 (380 - 1.930)	660	6,30	1,30 + 1,60	2,71	3,79			6,50 (2,20 - 8,20)		3,57 B		1.820 (400 - 2.890)	910	8,60
7 + 12	2,00	3,20			5,20 (2,40 - 5,80)	3,66 A			1.420 (370 - 1.860)	710	6,80	1,30 + 1,80	2,65	4,25			6,90 (2,20 - 8,60)		3,58 B		1.930 (380 - 2.920)	965	9,10
7 + 15	2,00	4,00			6,00 (2,40 - 6,70)	3,23 A			1.860 (370 - 2.480)	930	8,80	1,30 + 2,30	2,63	5,27			7,90 (2,20 - 9,80)		3,42 B		2.310 (380 - 3.510)	1.155	10,90
7 + 18	2,00	5,00			7,00 (2,40 - 8,10)	3,38 A			2.070 (350 - 3.100)	1.035	9,80	1,30 + 2,70	2,57	6,43			9,00 (2,20 - 10,00)		3,88 A		2.320 (330 - 3.310)	1.160	10,90
7 + 21	2,00	6,00			8,00 (2,40 - 8,50)		5,60 A+[3]	8,00	2.690 (350 - 3.490)	500	12,80	1,30 + 3,30	2,35	7,05			9,40 (2,20 - 10,00)		3,80 A+[3]	8,00	2.510 (330 - 3.310)	2.497	11,80
7 + 24	1,78	6,22			8,00 (2,50 - 8,50)	3,14 B			2.550 (380 - 3.340)	1.275	12,10	1,10 + 3,50	2,09	7,31			9,40 (2,20 - 10,30)		3,84 A		2.450 (330 - 3.490)	1.225	11,50
9[1] + 9[1]	2,50	2,50			5,00 (2,40 - 5,80)	3,65 A			1.370 (380 - 1.930)	685	6,60	1,50 + 1,50	3,25	3,25			6,50 (2,20 - 8,60)		3,57 B		1.820 (400 - 3.000)	910	8,60
9[1] + 9[2]	2,50	2,80			5,30 (2,40 - 5,80)	3,46 A			1.530 (380 - 1.930)	765	7,30	1,50 + 1,60	3,21	3,59			6,80 (2,20 - 8,60)		3,47 B		1.960 (400 - 3.000)	980	9,20
9[1] + 12	2,50	3,20			5,70 (2,40 - 6,70)	3,37 A			1.690 (370 - 2.480)	845	8,10	1,50 + 1,80	3,20	4,10			7,30 (2,20 - 9,80)		3,51 B		2.080 (380 - 3.520)	1.040	9,80
9[1] + 15	2,50	4,00			6,50 (2,40 - 7,20)	3,00 C			2.170 (370 - 2.900)	1.085	10,30	1,50 + 2,30	3,19	5,11			8,30 (2,20 - 10,00)		3,36 C		2.470 (380 - 3.640)	1.235	11,60
9[1] + 18	2,50	5,00			7,50 (2,40 - 8,50)	3,14 B			2.390 (350 - 3.490)	1.195	11,30	1,50 + 2,70	3,13	6,27			9,40 (2,20 - 10,00)		3,75 A		2.510 (330 - 3.310)	1.255	11,80
9[1] + 21	2,35	5,65			8,00 (2,50 - 8,50)	2,97 C			2.690 (390 - 3.490)	1.345	12,80	1,50 + 3,10	2,76	6,64			9,40 (2,20 - 10,00)		3,75 A		2.510 (330 - 3.310)	1.255	11,80
9[1] + 24	2,11	5,89			8,00 (2,50 - 8,50)	3,14 B			2.550 (380 - 3.340)	1.275	12,10	1,40 + 3,20	2,47	6,93			9,40 (2,20 - 10,30)		3,84 A		2.450 (330 - 3.490)	1.225	11,50
9[2] + 9[2]	2,80	2,80			5,60 (2,40 - 5,80)	3,31 A			1.690 (380 - 1.930)	845	8,10	1,60 + 1,60	3,60	3,60			7,20 (2,20 - 8,60)		3,41 B		2.110 (400 - 3.000)	1.055	9,90
9[2] + 12	2,80	3,20			6,00 (2,40 - 6,70)	3,21 A			1.870 (370 - 2.480)	935	8,90	1,60 + 1,80	3,59	4,11			7,70 (2,20 - 9,80)		3,47 B		2.220 (380 - 3.520)	1.110	10,40
9[2] + 15	2,80	4,00			6,80 (2,40 - 7,20)	2,93 C			2.320 (370 - 2.900)	1.160	11,00	1,60 + 2,30	3,54	5,06			8,60 (2,20 - 10,00)		3,61 A		2.380 (380 - 3.640)	1.190	11,20
9[2] + 18	2,80	5,00			7,80 (2,40 - 8,50)	3,06 B			2.550 (350 - 3.490)	1.275	12,10	1,60 + 2,70	3,37	6,03			9,40 (2,20 - 10,00)		3,75 A		2.510 (330 - 3.310)	1.255	11,80
9[2] + 21	2,55	5,45			8,00 (2,50 - 8,50)	2,97 C			2.690 (390 - 3.490)	1.345	12,80	1,60 + 2,90	2,99	6,41			9,40 (2,20 - 10,30)		3,75 A		2.510 (330 - 3.500)	1.255	11,80
9[2] + 24	2,29	5,71			8,00 (2,50 - 8,50)	3,14 B			2.550 (380 - 3.340)	1.275	12,10	1,50 + 3,10	2,69	6,71			9,40 (2,20 - 10,30)		3,84 A		2.450 (330 - 3.490)	1.225	11,50
12 + 12	3,20	3,20			6,40 (2,40 - 7,20)	3,14 B			2.040 (370 - 2.760)	1.020	9,70	1,80 + 1,80	4,05	4,05			8,10 (2,20 - 10,00)		3,45 B		2.350 (370 - 3.560)	1.175	11,00
12 + 15	3,20	4,00			7,20 (2,40 - 8,10)	2,86 C			2.520 (370 - 3.630)	1.260	12,00	1,80 + 2,30	4,04	5,06			9,10 (2,20 - 10,00)		3,57 B		2.550 (360 - 3.550)	1.275	12,00
12 + 18	3,12	4,88			8,00 (2,50 - 8,50)		5,60 A+[3]	8,00	2.550 (380 - 3.340)	500	12,10	1,80 + 2,70	3,67	5,73			9,40 (2,20 - 10,00)		3,80 A+[3]	8,00	2.430 (320 - 3.280)	2.947	11,40
12 + 21	2,78	5,22			8,00 (2,50 - 8,50)	3,14 B			2.550 (380 - 3.340)	1.275	12,10	1,60 + 2,90	3,27	6,13			9,40 (2,20 - 10,30)		3,87 A		2.430 (320 - 3.400)	1.215	11,40
12 + 24	2,51	5,49			8,00 (2,50 - 8,60)	3,21 A			2.490 (380 - 3.340)	1.245	11,80	1,50 + 3,00	2,95	6,45			9,40 (2,20 - 10,30)		3,88 A		2.420 (320 - 3.380)	1.210	11,40
15 + 15	4,00	4,00			8,00 (2,50 - 8,50)		5,60 A+[3]	8,00	3.080 (400 - 4.040)	500	14,60	2,30 + 2,30	4,70	4,70			9,40 (2,20 - 10,00)		3,80 A+[3]	8,00	2.640 (360 - 3.530)	2.947	12,40
15 + 18	3,56	4,44			8,00 (2,50 - 8,50)	3,14 B			2.550 (380 - 3.340)	1.275	12,10	2,10 + 2,50	4,18	5,22			9,40 (2,20 - 10,30)		3,88 A		2.420 (320 - 3.390)	1.210	11,40
15 + 21	3,20	4,80			8,00 (2,50 - 8,60)	3,14 B			2.550 (380 - 3.420)	1.275	12,10	1,80 + 2,60	3,76	5,64			9,40 (2,20 - 10,30)		3,88 A		2.420 (320 - 3.390)	1.210	11,40
15 + 24	2,91	5,09			8,00 (2,50 - 8,60)	3,21 A			2.490 (380 - 3.260)	1.245	11,80	1,70 + 2,80	3,42	5,98			9,40 (2,20 - 10,50)		3,90 A		2.410 (320 - 3.500)	1.205	11,30
18 + 18	4,00	4,00			8,00 (2,50 - 8,60)	3,59 A			2.230 (380 - 2.950)	1.115	10,60	2,30 + 2,30	4,70	4,70			9,40 (2,20 - 10,30)		4,18 A		2.250 (320 - 3.170)	1.125	10,60
18 + 21	3,64	4,36			8,00 (2,50 - 8,60)	3,59 A			2.230 (380 - 2.950)	1.115	10,60	2,10 + 2,40	4,27	5,13			9,40 (2,20 - 10,50)		4,18 A		2.250 (320 - 3.230)	1.125	10,60
18 + 24	3,33	4,67			8,00 (2,50 - 8,60)	3,69 A			2.170 (380 - 2.880)	1.085	10,30	1,90 + 2,50	3,92	5,48			9,40 (2,20 - 10,50)		4,20 A		2.240 (320 - 3.210)	1.120	10,50
21 + 21	4,00	4,00			8,00 (2,50 - 8,60)	3,59 A			2.230 (380 - 2.950)	1.115	10,60	2,30 + 2,30	4,70	4,70			9,40 (2,20 - 10,50)		4,18 A		2.250 (320 - 3.230)	1.125	10,60
21 + 24	3,69	4,31			8,00 (2,50 - 8,60)	3,69 A			2.170 (380 - 2.880)	1.085	10,30	2,10 + 2,40	4,34	5,06			9,40 (2,20 - 10,50)		4,20 A		2.240 (320 - 3.210	1.120	10,50
3 Rooms																							
5 + 5 + 5	1,60	1,60	1,60		4,80 (3,00 - 8,50)	4,44 A			1.080 (490 - 3.110)	540	5,20	1,00 + 1,00 + 1,00	2,87	2,87	2,87		8,61 (3,20 - 10,40)		4,08 A		2.110 (510 - 3.420)	1.055	9,90
5 + 5 + 7	1,60	1,60	2,00		5,20 (3,00 - 8,50)	4,41 A			1.180 (490 - 3.110)	590	5,70	1,00 + 1,00 + 1,30	2,65	2,65	3,31		8,61 (3,20 - 10,40)		4,20 A		2.050 (510 - 3.350)	1.025	9,60
5 + 5 + 9[1]	1,60	1,60	2,50		5,70 (3,00 - 8,50)	4,10 A			1.390 (490 - 3.110)	695	6,70	1,00 + 1,00 + 1,50	2,42	2,42	3,77		8,61 (3,20 - 10,40)		4,20 A		2.050 (510 - 3.350)	1.025	9,60
5 + 5 + 9[2]	1,60	1,60	2,80		6,00 (3,00 - 8,50)	4,00 A			1.500 (490 - 3.110)	750	7,20	1,00 + 1,00 + 1,60	2,30	2,30	4,01		8,61 (3,20 - 10,40)		4,20 A		2.050 (510 - 3.350)	1.025	9,60
5 + 5 + 12	1,60	1,60	3,20		6,40 (3,00 - 8,50)	3,83 A			1.670 (480 - 3.030)	835	8,00	1,00 + 1,00 + 1,80	2,15	2,15	4,31		8,61 (3,20 - 10,40)		4,26 A		2.020 (500 - 3.310)	1.010	9,50
5 + 5 + 15	1,60	1,60	4,00		7,20 (3,00 - 8,50)	3,71 A			1.940 (480 - 2.950)	970	9,20	1,00 + 1,00 + 2,30	1,91	1,91	4,79		8,61 (3,20 - 10,40)		4,28 A		2.010 (500 - 3.290)	1.005	9,40
5 + 5 + 18	1,56	1,56	4,88		8,00 (3,00 - 8,60)	3,81 A			2.100 (520 - 2.730)	1.050	10,00	1,00 + 1,00 + 2,70	1,68	1,68	5,25		8,61 (3,20 - 10,40)		4,53 A		1.900 (490 - 3.070)	950	8,90
5 + 5 + 21	1,39	1,39	5,22		8,00 (3,00 - 8,60)	3,81 A			2.100 (520 - 2.730)	1.050	10,00	0,90 + 0,90 + 2,90	1,50	1,50	5,61		8,61 (3,20 - 10,50)		4,53 A+[3]		1.900 (490 - 3.140)	950	8,90
5 + 5 + 24	1,25	1,25	5,50		8,00 (3,00 - 8,80)	3,92 A			2.040 (520 - 2.800)	1.020	9,70	0,80 + 0,80 + 3,00	1,35	1,35	5,91		8,61 (3,20 - 10,50)		4,56 A		1.890 (520 - 3.120)	945	8,90
5 + 7 + 7	1,60	2,00	2,00		5,60 (3,00 - 8,50)	4,18 A			1.340 (490 - 3.030)	670	6,40	1,00 + 1,30 + 1,30	2,45	3,08	3,08		8,61 (3,20 - 10,40)		4,22 A		2.040 (510 - 3.330)	1.020	9,60
5 + 7 + 9[1]	1,60	2,00	2,50		6,10 (3,00 - 8,50)	3,94 A			1.550 (490 - 3.030)	775	7,40	1,00 + 1,30 + 1,50	2,26	2,82	3,53		8,61 (3,20 - 10,40)		4,22 A		2.040 (510 - 3.330)	1.020	9,60
5 + 7 + 9[2]	1,60	2,00	2,80		6,40 (3,00 - 8,50)	3,83 A			1.670 (490 - 3.030)	835	8,00	1,00 + 1,30 + 1,60	2,15	2,69	3,77		8,61 (3,20 - 10,40)		4,22 A		2.040 (510 - 3.330)	1.020	9,60
5 + 7 + 12	1,60	2,00	3,20		6,80 (3,00 - 8,50)	3,84 A			1.770 (480 - 2.950)	885	8,40	1,00 + 1,30 + 1,80	2,03	2,53	4,05		8,61 (3,20 - 10,40)		4,28 A		2.010 (500 - 3.290)	1.005	9,40
5 + 7 + 15	1,60	2,00	4,00		7,60 (3,00 - 8,50)	3,57 A			2.130 (480 - 2.950)	1.065	10,10	1,00 + 1,30 + 2,30	1,81	2,27	4,53		8,61 (3,20 - 10,40)		4,31 A		2.000 (500 - 3.280)	1.000	9,40
5 + 7 + 18	1,49	1,86	4,65		8,00 (3,00 - 8,60)	3,81 A			2.100 (520 - 2.730)	1.050	10,00	0,90 + 1,20 + 2,50	1,60	2,00	5,01		8,61 (3,20 - 10,50)		4,53 A		1.900 (520 - 3.120)	950	8,90
5 + 7 + 21	1,33	1,67	5,00		8,00 (3,00 - 8,60)	3,81 A			2.100 (520 - 2.730)	1.050	10,00	0,80 + 1,10 + 2,70	1,44	1,79	5,38		8,61 (3,20 - 10,50)		4,53 A		1.900 (520 - 3.120)	950	8,90
5 + 7 + 24	1,21	1,51	5,28		8,00 (3,00 - 8,80)	3,92 A			2.040 (520 - 2.800)	1.020	9,70	0,80 + 1,00 + 2,90	1,30	1,62	5,69		8,61 (3,20 - 10,50)		4,56 A		1.890 (520 - 3.100)	945	8,90
5 + 9[1] + 9[1]	1,60	2,50	2,50		6,60 (3,00 - 8,50)	3,69 A			1.790 (490 - 3.030)	895	8,50	1,00 + 1,50 + 1,50	2,09	3,26	3,26		8,61 (3,20 - 10,40)		4,22 A		2.040 (510 - 3.330)	1.020	9,60
5 + 9[1] + 9[2]	1,60	2,50	2,80		6,90 (3,00 - 8,50)	3,77 A			1.830 (490 - 3.030)	915	8,70	1,00 + 1,50 + 1,60	2,00	3,12	3,49		8,61 (3,20 - 10,40)		4,22 A		2.040 (510 - 3.330)	1.020	9,60
5 + 9[1] + 12	1,60	2,50	3,20		7,30 (3,00 - 8,50)	3,65 A			2.000 (480 - 2.950)	1.000	9,50	1,00 + 1,50 + 1,80	1,89	2,95	3,77		8,61 (3,20 - 10,40)		4,28 A		2.010 (500 - 3.290)	1.005	9,40
5 + 9[1] + 15	1,58	2,47	3,95		8,00 (3,00 - 8,60)	3,49 A			2.290 (480 - 3.030)	1.145	10,90	1,00 + 1,50 + 2,30	1,70	2,66	4,25		8,61 (3,20 - 10,40)		4,31 A		2.000 (500 - 3.280)	1.000	9,40
5 + 9[1] + 18	1,40	2,20	4,40		8,00 (3,00 - 8,60)	3,81 A			2.100 (520 - 2.730)	1.050	10,00	0,90 + 1,40 + 2,40	1,51	2,37	4,73		8,61 (3,20 - 10,50)		4,53 A		1.900 (520 - 3.120)	950	8,90
5 + 9[1] + 21	1,27	1,98	4,75		8,00 (3,00 - 8,80)	3,81 A			2.100 (520 - 2.800)	1.050	10,00	0,80 + 1,30 + 2,60	1,36	2,13	5,12		8,61 (3,20 - 10,50)		4,53 A		1.900 (520 - 3.120)	950	8,90
5 + 9[1] + 24	1,15	1,80	5,05		8,00 (3,00 - 8,80)	3,92 A			2.040 (520 - 2.800)	1.020	9,70	0,70 + 1,20 + 2,80	1,24	1,94	5,43		8,61 (3,20 - 10,60)		4,56 A		1.890 (520 - 3.170)	945	8,90
5 + 9[2] + 9[2]	1,60	2,80	2,80		7,20 (3,00 - 8,50)	3,58 A			2.010 (490 - 3.030)	1.005	9,50	1,00 + 1,60 + 1,60	1,91	3,35	3,35		8,61 (3,20 - 10,40)		4,22 A		2.040 (510 - 3.330)	1.020	9,60
5 + 9[2] + 12	1,60	2,80	3,20		7,60 (3,00 - 8,50)	3,47 A			2.190 (480 - 2.950)	1.095	10,40	1,00 + 1,60 + 1,80	1,81	3,17	3,63		8,61 (3,20 - 10,40)		4,28 A		2.010 (500 - 3.290)	1.005	9,40
5 + 9[2] + 15	1,52	2,67	3,81		8,00 (3,00 - 8,60)	3,49 A			2.290 (480 - 3.030)	1.145	10,90	1,00 + 1,60 + 2,20	1,64	2,87	4,10		8,61 (3,20 - 10,40)		4,31 A		2.000 (500 - 3.280)	1.000	9,40
5 + 9[2] + 18	1,36	2,38	4,26		8,00 (3,00 - 8,60)	3,81 A			2.100 (520 - 2.730)	1.050	10,00	0,90 + 1,50 + 2,40	1,47	2,56	4,58		8,61 (3,20 - 10,50)		4,53 A		1.900 (520 - 3.120)	950	8,90
5 + 9[2] + 21	1,23	2,15	4,62		8,00 (3,00 - 8,80)	3,81 A			2.100 (520 - 2.800)	1.050	10,00	0,80 + 1,40 + 2,50	1,32	2,32	4,97		8,61 (3,20 - 10,50)		4,53 A		1.900 (520 - 3.120)	950	8,90
5 + 9[2] + 24	1,12	1,96	4,92		8,00 (3,00 - 8,80)	3,92 A			2.040 (520 - 2.800)	1.020	9,70	0,70 + 1,30 + 2,70	1,21	2,11	5,29		8,61 (3,20 - 10,60)		4,56 A		1.890 (520 - 3.170)	945	8,90
5 + 12 + 12	1,60	3,20	3,20		8,00 (3,00 - 8,60)	3,59 A			2.230 (480 - 2.950)	1.115	10,60	1,00 + 1,80 + 1,80	1,73	3,44	3,44		8,61 (3,20 - 10,40)		4,35 A		1.980 (500 - 3.250)	990	9,30
5 + 12 + 15	1,45	2,91	3,64		8,00 (3,00 - 8,60)	3,59 A			2.230 (480 - 2.950)	1.115	10,60	0,90 + 1,70 + 2,10	1,57	3,13	3,91		8,61 (3,20 - 10,50)		4,37 A		1.970 (490 - 3.240)	985	9,30
5 + 12 + 18	1,31	2,61	4,08		8,00 (3,00 - 8,60)	3,92 A			2.040 (520 - 2.650)	1.020	9,70	0,80 + 1,60 + 2,30	1,41	2,81	4,39		8,61 (3,20 - 10,50)		4,60 A		1.870 (520 - 3.090)	935	8,80
5 + 12 + 21	1,19	2,37	4,44		8,00 (3,00 - 8,80)	3,92 A			2.040 (520 - 2.800)	1.020	9,70	0,70 + 1,50 + 2,50	1,28	2,55	4,78		8,61 (3,20 - 10,50)		4,60 A		1.870 (520 - 3.090)	935	8,80
5 + 12 + 24	1,08	2,17	4,75		8,00 (3,00 - 9,00)	3,92 A			2.040 (520 - 2.870)	1.020	9,70	0,70 + 1,40 + 2,60	1,17	2,33	5,11		8,61 (3,20 - 10,60)		4,63 A		1.860 (520 - 3.130)	930	8,70
5 + 15 + 15	1,34	3,33	3,33		8,00 (3,00 - 8,60)	3,59 A			2.230 (480 - 2.950)	1.115	10,60	0,80 + 1,90 + 1,90	1,43	3,59	3,59		8,61 (3,20 - 10,50)		4,37 A		1.970 (490 - 3.230)	985	9,30
5 + 15 + 18	1,21	3,02	3,77		8,00 (3,00 - 8,80)	3,92 A			2.040 (520 - 2.800)	1.020	9,70	0,80 + 1,70 + 2,20	1,30	3,25	4,06		8,61 (3,20 - 10,50)		4,60 A		1.870 (520 - 3.070)	935	8,80
5 + 15 + 21	1,10	2,76	4,14		8,00 (3,00 - 8,80)	3,92 A			2.040 (520 - 2.800)	1.020	9,70	0,70 + 1,60 + 2,40	1,19	2,97	4,45		8,61 (3,20 - 10,60)		4,60 A		1.870 (520 - 3.140)	935	8,80
5 + 15 + 24	1,02	2,54	4,44		8,00 (3,00 - 9,00)	4,04 A			1.980 (520 - 2.800)	990	9,40	0,70 + 1,60 + 2,50	1,09	2,73	4,79		8,61 (3,20 - 10,60)		4,63 A		1.860 (530 - 3.120)	930	8,70

Free Multi 4x1 CU-4E27PBE. Minimum capacity connected: 4,5 kW. Maximum capacity connected: 13,6 kW

Indoor unit capacity	Cooling capacity (kW)					EER	SEER	Pdesign	Input power rating	Annual consumption	Current	Moisture removal	Heating capacity (kW)					COP	SCOP	Pdesign at -10°C	Input power rating	Annual consumption	Current
	Room A	Room B	Room C	Room D	Total (Min - Max)	W/W	W/W	kWh	W	kWh	230V (A)	Volume (l/h)	Room A	Room B	Room C	Room D	Total (Min - Max)	W/W	W/W	kWh	W	kWh	230V (A)
5 + 18 + 18	1,10	3,45	3,45		8,00 (3,00 - 8,80)	4,17 A			1.920 (570 - 2.580)	960	9,10	0,70 + 2,00 + 2,00	1,19	3,71	3,71		8,61 (3,20 - 10,60)		4,81 A		1.790 (580 - 3.000)	895	8,40
5 + 18 + 21	1,02	3,17	3,81		8,00 (3,00 - 9,00)	4,17 A			1.920 (570 - 2.650)	960	9,10	0,70 + 1,80 + 2,20	1,09	3,42	4,10		8,61 (3,20 - 10,60)		4,81 A		1.790 (580 - 3.000)	895	8,40
5 + 18 + 24	0,94	2,94	4,12		8,00 (3,00 - 9,00)	4,17 A			1.920 (570 - 2.650)	960	9,10	0,70 + 1,70 + 2,30	1,01	3,17	4,43		8,61 (3,20 - 10,60)		4,73 A		1.820 (610 - 2.990)	910	8,60
5 + 21 + 21	0,94	3,53	3,53		8,00 (3,00 - 9,00)	4,17 A			1.920 (570 - 2.650)	960	9,10	0,70 + 2,00 + 2,00	1,01	3,80	3,80		8,61 (3,20 - 10,60)		4,81 A		1.790 (580 - 3.000)	895	8,40
7 + 7 + 7	2,00	2,00	2,00		6,00 (3,00 - 8,50)	4,00 A			1.500 (480 - 3.030)	750	7,20	1,30 + 1,30 + 1,30	2,87	2,87	2,87		8,61 (3,20 - 10,40)		4,24 A		2.030 (500 - 3.320)	1.015	9,50
7 + 7 + 9[1]	2,00	2,00	2,50		6,50 (3,00 - 8,50)	3,76 A			1.730 (480 - 3.030)	865	8,30	1,30 + 1,30 + 1,50	2,77	2,77	3,46		9,00 (3,20 - 10,40)		4,15 A		2.170 (500 - 3.320)	1.085	10,20
7 + 7 + 9[2]	2,00	2,00	2,80		6,80 (3,00 - 8,50)	3,84 A			1.770 (480 - 3.030)	885	8,40	1,30 + 1,30 + 1,60	2,76	2,76	3,88		9,40 (3,20 - 10,40)		4,05 A		2.320 (500 - 3.320)	1.160	10,90
7 + 7 + 12	2,00	2,00	3,20		7,20 (3,00 - 8,50)	3,71 A			1.940 (480 - 2.950)	970	9,20	1,30 + 1,30 + 1,80	2,61	2,61	4,18		9,40 (3,20 - 10,40)		4,10 A		2.290 (500 - 3.280)	1.145	10,80
7 + 7 + 15	2,00	2,00	4,00		8,00 (3,00 - 8,60)		5,60 A+++[3]	8,00	2.290 (480 - 3.030)	500	10,90	1,30 + 1,30 + 2,30	2,35	2,35	4,70		9,40 (3,20 - 10,40)		3,80 A[3]	8,00	2.280 (500 - 3.260)	2.947	10,70
7 + 7 + 18	1,78	1,78	4,44		8,00 (3,00 - 8,60)	3,92 A			2.040 (520 - 2.650)	1.020	9,70	1,10 + 1,10 + 2,50	2,09	2,09	5,22		9,40 (3,20 - 10,50)		4,35 A		2.160 (520 - 3.110)	1.080	10,20
7 + 7 + 21	1,60	1,60	4,80		8,00 (3,00 - 8,80)	3,92 A			2.040 (520 - 2.800)	1.020	9,70	1,00 + 1,00 + 2,60	1,88	1,88	5,64		9,40 (3,20 - 10,50)		4,35 A		2.160 (520 - 3.110)	1.080	10,20
7 + 7 + 24	1,45	1,45	5,10		8,00 (3,00 - 8,80)	3,92 A			2.040 (520 - 2.720)	1.020	9,70	0,90 + 0,90 + 2,80	1,71	1,71	5,98		9,40 (3,20 - 10,50)		4,37 A		2.150 (520 - 3.090)	1.075	10,10
7 + 9[1] + 9[1]	2,00	2,50	2,50		7,00 (3,00 - 8,50)	3,70 A			1.890 (480 - 3.030)	945	9,00	1,30 + 1,50 + 1,50	2,68	3,36	3,36		9,40 (3,20 - 10,40)		4,05 A		2.320 (500 - 3.320)	1.160	10,90
7 + 9[1] + 9[2]	2,00	2,50	2,80		7,30 (3,00 - 8,50)	3,63 A			2.010 (480 - 3.030)	1.005	9,50	1,30 + 1,50 + 1,60	2,57	3,22	3,61		9,40 (3,20 - 10,40)		4,05 A		2.320 (500 - 3.320)	1.160	10,90
7 + 9[1] + 12	2,00	2,50	3,20		7,70 (3,00 - 8,50)	3,65 A			2.110 (480 - 2.950)	1.055	10,00	1,30 + 1,50 + 1,80	2,44	3,05	3,91		9,40 (3,20 - 10,40)		4,10 A		2.290 (500 - 3.280)	1.145	10,80
7 + 9[1] + 15	1,88	2,35	3,77		8,00 (3,00 - 8,60)	3,49 A			2.290 (480 - 3.030)	1.145	10,90	1,20 + 1,50 + 2,20	2,21	2,76	4,43		9,40 (3,20 - 10,40)		4,12 A		2.280 (500 - 3.260)	1.140	10,70
7 + 9[1] + 18	1,68	2,11	4,21		8,00 (3,00 - 8,60)	3,92 A			2.040 (520 - 2.650)	1.020	9,70	1,10 + 1,40 + 2,40	1,98	2,47	4,95		9,40 (3,20 - 10,50)		4,35 A		2.160 (520 - 3.110)	1.080	10,20
7 + 9[1] + 21	1,52	1,90	4,58		8,00 (3,00 - 8,80)	3,92 A			2.040 (520 - 2.800)	1.020	9,70	1,00 + 1,20 + 2,50	1,79	2,24	5,37		9,40 (3,20 - 10,50)		4,35 A		2.160 (520 - 3.110)	1.080	10,20
7 + 9[1] + 24	1,39	1,74	4,87		8,00 (3,00 - 8,80)	3,92 A			2.040 (520 - 2.720)	1.020	9,70	0,90 + 1,10 + 2,70	1,63	2,04	5,73		9,40 (3,20 - 10,60)		4,37 A		2.150 (520 - 3.150)	1.075	10,10
7 + 9[2] + 9[2]	2,00	2,80	2,80		7,60 (3,00 - 8,50)	3,47 A			2.190 (480 - 3.030)	1.095	10,40	1,30 + 1,60 + 1,60	2,48	3,46	3,46		9,40 (3,20 - 10,40)		4,05 A		2.320 (500 - 3.320)	1.160	10,90
7 + 9[2] + 12	2,00	2,80	3,20		8,00 (3,00 - 8,60)		5,60 A+++[3]	8,00	2.290 (480 - 3.030)	500	10,90	1,30 + 1,60 + 1,80	2,35	3,29	3,76		9,40 (3,20 - 10,40)		3,80 A[3]	8,00	2.290 (500 - 3.280)	2.947	10,80
7 + 9[2] + 15	1,81	2,55	3,64		8,00 (3,00 - 8,60)	3,49 A			2.290 (480 - 3.030)	1.145	10,90	1,20 + 1,60 + 2,10	2,14	2,99	4,27		9,40 (3,20 - 10,50)		4,12 A		2.280 (500 - 3.330)	1.140	10,70
7 + 9[2] + 18	1,63	2,29	4,08		8,00 (3,00 - 8,60)	3,92 A			2.040 (520 - 2.650)	1.020	9,70	1,00 + 1,50 + 2,30	1,91	2,69	4,80		9,40 (3,20 - 10,50)		4,35 A		2.160 (520 - 3.110)	1.080	10,20
7 + 9[2] + 21	1,48	2,07	4,45		8,00 (3,00 - 8,80)	3,92 A			2.040 (520 - 2.800)	1.020	9,70	0,90 + 1,30 + 2,50	1,74	2,44	5,22		9,40 (3,20 - 10,50)		4,35 A		2.160 (520 - 3.110)	1.080	10,20
7 + 9[2] + 24	1,35	1,90	4,75		8,00 (3,00 - 9,00)	3,92 A			2.040 (520 - 2.870)	1.020	9,70	0,90 + 1,20 + 2,60	1,59	2,23	5,58		9,40 (3,20 - 10,60)		4,37 A		2.150 (520 - 3.150)	1.075	10,10
7 + 12 + 12	1,90	3,05	3,05		8,00 (3,00 - 8,60)		5,60 A+++[3]	8,00	2.230 (480 - 2.950)	500	10,60	1,20 + 1,70 + 1,70	2,24	3,58	3,58		9,40 (3,20 - 10,40)		3,80 A[3]	8,00	2.260 (490 - 3.240)	2.947	10,60
7 + 12 + 15	1,74	2,78	3,48		8,00 (3,00 - 8,60)	3,59 A			2.230 (480 - 2.950)	1.115	10,60	1,10 + 1,60 + 2,00	2,04	3,27	4,09		9,40 (3,20 - 10,50)		4,18 A		2.250 (490 - 3.230)	1.125	10,60
7 + 12 + 18	1,57	2,51	3,92		8,00 (3,00 - 8,80)	3,92 A			2.040 (520 - 2.800)	1.020	9,70	1,00 + 1,50 + 2,30	1,84	2,95	4,61		9,40 (3,20 - 10,50)		4,39 A		2.140 (520 - 3.070)	1.070	10,10
7 + 12 + 21	1,42	2,29	4,29		8,00 (3,00 - 8,80)	3,92 A			2.040 (520 - 2.800)	1.020	9,70	0,90 + 1,50 + 2,40	1,67	2,69	5,04		9,40 (3,20 - 10,60)		4,39 A		2.140 (520 - 3.140)	1.070	10,10
7 + 12 + 24	1,31	2,10	4,59		8,00 (3,00 - 9,00)	4,04 A			1.980 (520 - 2.800)	990	9,40	0,80 + 1,40 + 2,50	1,54	2,47	5,39		9,40 (3,20 - 10,60)		4,43 A		2.120 (530 - 3.120)	1.060	10,00
7 + 15 + 15	1,60	3,20	3,20		8,00 (3,00 - 8,80)	3,59 A			2.230 (480 - 3.030)	1.115	10,60	1,00 + 1,80 + 1,80	1,88	3,76	3,76		9,40 (3,20 - 10,50)		4,20 A		2.240 (490 - 3.210)	1.120	10,50
7 + 15 + 18	1,45	2,91	3,64		8,00 (3,00 - 8,80)	3,92 A			2.040 (520 - 2.720)	1.020	9,70	0,90 + 1,70 + 2,10	1,71	3,42	4,27		9,40 (3,20 - 10,50)		4,41 A		2.130 (530 - 3.060)	1.065	10,00
7 + 15 + 21	1,33	2,67	4,00		8,00 (3,00 - 9,00)	3,92 A			2.040 (520 - 2.870)	1.020	9,70	0,80 + 1,60 + 2,30	1,57	3,13	4,70		9,40 (3,20 - 10,60)		4,41 A		2.130 (530 - 3.120)	1.065	10,00
7 + 15 + 24	1,23	2,46	4,31		8,00 (3,00 - 9,00)	4,04 A			1.980 (520 - 2.800)	990	9,40	0,80 + 1,50 + 2,40	1,45	2,89	5,06		9,40 (3,20 - 10,60)		4,43 A		2.120 (530 - 3.110)	1.060	10,00
7 + 18 + 18	1,34	3,33	3,33		8,00 (3,00 - 9,00)	4,17 A			1.920 (570 - 2.650)	960	9,10	0,80 + 1,90 + 1,90	1,56	3,92	3,92		9,40 (3,20 - 10,60)		4,61 A		2.040 (600 - 2.990)	1.020	9,60
7 + 18 + 21	1,23	3,08	3,69		8,00 (3,00 - 9,00)	4,17 A			1.920 (570 - 2.650)	960	9,10	0,80 + 1,70 + 2,10	1,44	3,62	4,34		9,40 (3,20 - 10,60)		4,61 A		2.040 (600 - 2.990)	1.020	9,60
9[1] + 9[1] + 9[1]	2,50	2,50	2,50		7,50 (3,00 - 8,50)	3,52 A			2.130 (480 - 3.030)	1.065	10,10	1,50 + 1,50 + 1,50	3,13	3,13	3,13		9,39 (3,20 - 10,40)		4,05 A		2.320 (500 - 3.320)	1.160	10,90
9[1] + 9[1] + 9[2]	2,50	2,50	2,80		7,80 (3,00 - 8,50)	3,50 A			2.230 (480 - 3.030)	1.115	10,60	1,50 + 1,50 + 1,60	3,01	3,01	3,38		9,40 (3,20 - 10,40)		4,05 A		2.320 (500 - 3.320)	1.160	10,90
9[1] + 9[1] + 12	2,44	2,44	3,12		8,00 (3,00 - 8,60)		5,60 A+++[3]	8,00	2.290 (480 - 3.030)	500	10,90	1,50 + 1,50 + 1,80	2,87	2,87	3,66		9,40 (3,20 - 10,40)		3,80 A[3]	8,00	2.290 (500 - 3.280)	2.947	10,80
9[1] + 9[1] + 15	2,22	2,22	3,56		8,00 (3,00 - 8,60)	3,49 A			2.290 (480 - 3.030)	1.145	10,90	1,40 + 1,40 + 2,10	2,61	2,61	4,18		9,40 (3,20 - 10,50)		4,12 A		2.280 (500 - 3.330)	1.140	10,70
9[1] + 9[1] + 18	2,00	2,00	4,00		8,00 (3,00 - 8,80)	3,92 A			2.040 (520 - 2.800)	1.020	9,70	1,30 + 1,30 + 2,30	2,35	2,35	4,70		9,40 (3,20 - 10,50)		4,35 A		2.160 (520 - 3.110)	1.080	10,20
9[1] + 9[1] + 21	1,82	1,82	4,36		8,00 (3,00 - 8,80)	3,92 A			2.040 (520 - 2.800)	1.020	9,70	1,20 + 1,20 + 2,40	2,14	2,14	5,12		9,40 (3,20 - 10,50)		4,35 A		2.160 (520 - 3.110)	1.080	10,20
9[1] + 9[1] + 24	1,67	1,67	4,66		8,00 (3,00 - 9,00)	3,92 A			2.040 (520 - 2.870)	1.020	9,70	1,10 + 1,10 + 2,50	1,96	1,96	5,48		9,40 (3,20 - 10,60)		4,37 A		2.150 (520 - 3.150)	1.075	10,10
9[1] + 9[2] + 9[2]	2,46	2,77	2,77		8,00 (3,00 - 8,60)		5,60 A+++[3]	8,00	2.360 (480 - 3.110)	500	11,20	1,50 + 1,60 + 1,60	2,90	3,25	3,25		9,40 (3,20 - 10,40)		3,8 0 A[3]	8,00	2.320 (500 - 3.320)	2.947	10,90
9[1] + 9[2] + 12	2,35	2,64	3,01		8,00 (3,00 - 8,60)	3,49 A			2.290 (480 - 3.030)	1.145	10,90	1,50 + 1,60 + 1,70	2,76	3,10	3,54		9,40 (3,20 - 10,40)		4,10 A		2.290 (500 - 3.280)	1.145	10,80
9[1] + 9[2] + 15	2,15	2,41	3,44		8,00 (3,00 - 8,60)	3,49 A			2.290 (480 - 3.030)	1.145	10,90	1,40 + 1,50 + 2,00	2,53	2,83	4,04		9,40 (3,20 - 10,50)		4,12 A		2.280 (500 - 3.330)	1.140	10,70
9[1] + 9[2] + 18	1,94	2,17	3,89		8,00 (3,00 - 8,80)	3,92 A			2.040 (520 - 2.800)	1.020	9,70	1,30 + 1,40 + 2,30	2,28	2,56	4,56		9,40 (3,20 - 10,50)		4,35 A		2.160 (520 - 3.110)	1.080	10,20
9[1] + 9[2] + 21	1,77	1,98	4,25		8,00 (3,00 - 8,80)	3,92 A			2.040 (520 - 2.800)	1.020	9,70	1,10 + 1,30 + 2,40	2,08	2,33	4,99		9,40 (3,20 - 10,60)		4,35 A		2.160 (520 - 3.170)	1.080	10,20
9[1] + 9[2] + 24	1,63	1,82	4,55		8,00 (3,00 - 9,00)	3,92 A			2.040 (520 - 2.870)	1.020	9,70	1,00 + 1,20 + 2,50	1,91	2,14	5,35		9,40 (3,20 - 10,60)		4,37 A		2.150 (520 - 3.150)	1.075	10,10
9[1] + 12 + 12	2,24	2,88	2,88		8,00 (3,00 - 8,60)	3,59 A			2.230 (480 - 2.950)	1.115	10,60	1,50 + 1,70 + 1,70	2,64	3,38	3,38		9,40 (3,20 - 10,50)		4,16 A		2.260 (490 - 3.240)	1.130	10,60
9[1] + 12 + 15	2,06	2,64	3,30		8,00 (3,00 - 8,60)	3,59 A			2.230 (480 - 2.950)	1.115	10,60	1,30 + 1,60 + 1,90	2,42	3,10	3,88		9,40 (3,20 - 10,50)		4,18 A		2.250 (490 - 3.230)	1.125	10,60
9[1] + 12 + 18	1,87	2,39	3,74		8,00 (3,00 - 8,80)	3,92 A			2.040 (520 - 2.800)	1.020	9,70	1,20 + 1,50 + 2,20	2,20	2,81	4,39		9,40 (3,20 - 10,50)		4,39 A		2.140 (520 - 3.070)	1.070	10,10
9[1] + 12 + 21	1,71	2,19	4,10		8,00 (3,00 - 8,80)	3,92 A			2.040 (520 - 2.800)	1.020	9,70	1,10 + 1,40 + 2,30	2,01	2,57	4,82		9,40 (3,20 - 10,60)		4,39 A		2.140 (520 - 3.140)	1.070	10,10
9[1] + 12 + 24	1,57	2,02	4,41		8,00 (3,00 - 9,00)	4,04 A			1.980 (520 - 2.800)	990	9,40	1,00 + 1,30 + 2,40	1,85	2,37	5,18		9,40 (3,20 - 10,60)		4,43 A		2.120 (530 - 3.120)	1.060	10,00
9[1] + 15 + 15	1,90	3,05	3,05		8,00 (3,00 - 8,80)	3,59 A			2.230 (480 - 3.030)	1.115	10,60	1,20 + 1,70 + 1,70	2,24	3,58	3,58		9,40 (3,20 - 10,50)		4,20 A		2.240 (490 - 3.210)	1.120	10,50
9[1] + 15 + 18	1,74	2,78	3,48		8,00 (3,00 - 8,80)	3,92 A			2.040 (520 - 2.720)	1.020	9,70	1,10 + 1,60 + 2,00	2,04	3,27	4,09		9,40 (3,20 - 10,60)		4,41 A		2.130 (530 - 3.120)	1.065	10,00
9[1] + 15 + 21	1,60	2,56	3,84		8,00 (3,00 - 9,00)	3,92 A			2.040 (520 - 2.870)	1.020	9,70	1,00 + 1,60 + 2,20	1,88	3,01	4,51		9,40 (3,20 - 10,60)		4,41 A		2.130 (530 - 3.120)	1.065	10,00
9[1] + 15 + 24	1,48	2,37	4,15		8,00 (3,00 - 9,00)	4,04 A			1.980 (520 - 2.800)	990	9,40	0,90 + 1,50 + 2,40	1,74	2,79	4,87		9,40 (3,20 - 10,60)		4,43 A		2.120 (530 - 3.110)	1.060	10,00
9[1] + 18 + 18	1,60	3,20	3,20		8,00 (3,00 - 9,00)	4,17 A			1.920 (570 - 2.650)	960	9,10	1,00 + 1,80 + 1,80	1,88	3,76	3,76		9,40 (3,20 - 10,60)		4,61 A		2.040 (600 - 2.990)	1.020	9,60
9[1] + 18 + 21	1,48	2,96	3,56		8,00 (3,00 - 9,00)	4,17 A			1.920 (570 - 2.650)	960	9,10	0,90 + 1,70 + 2,10	1,74	3,48	4,18		9,40 (3,20 - 10,60)		4,61 A		2.040 (600 - 2.990)	1.020	9,60
9[2] + 9[2] + 9[2]	2,66	2,67	2,67		8,00 (3,00 - 8,60)		5,60 A+++[3]	8,00	2.360 (480 - 3.110)	500	11,20	1,60 + 1,60 + 1,60	3,13	3,13	3,14		9,40 (3,20 - 10,40)		3,80 A[3]	8,00	2.320 (500 - 3.320)	2.947	10,90
9[2] + 9[2] + 12	2,55	2,55	2,90		8,00 (3,00 - 8,60)	3,49 A			2.290 (480 - 3.030)	1.145	10,90	1,60 + 1,60 + 1,70	2,99	2,99	3,42		9,40 (3,20 - 10,50)		4,10 A		2.290 (500 - 3.340)	1.145	10,80
9[2] + 9[2] + 15	2,33	2,33	3,34		8,00 (3,00 - 8,60)	3,49 A			2.290 (480 - 3.030)	1.145	10,90	1,50 + 1,50 + 1,90	2,74	2,74	3,92		9,40 (3,20 - 10,50)		4,12 A		2.280 (500 - 3.330)	1.140	10,70
9[2] + 9[2] + 18	2,11	2,11	3,78		8,00 (3,00 - 8,80)	3,92 A			2.040 (520 - 2.800)	1.020	9,70	1,40 + 1,40 + 2,20	2,48	2,48	4,44		9,40 (3,20 - 10,50)		4,35 A		2.160 (520 - 3.110)	1.080	10,20
9[2] + 9[2] + 21	1,93	1,93	4,14		8,00 (3,00 - 8,80)	3,92 A			2.040 (520 - 2.800)	1.020	9,70	1,20 + 1,20 + 2,40	2,27	2,27	4,86		9,40 (3,20 - 10,60)		4,35 A		2.160 (520 - 3.170)	1.080	10,20
9[2] + 9[2] + 24	1,78	1,78	4,44		8,00 (3,00 - 9,00)	3,92 A			2.040 (520 - 2.870)	1.020	9,70	1,10 + 1,10 + 2,50	2,09	2,09	5,22		9,40 (3,20 - 10,60)		4,37 A		2.150 (520 - 3.150)	1.075	10,10
9[2] + 12 + 12	2,44	2,78	2,78		8,00 (3,00 - 8,60)	3,59 A			2.230 (480 - 2.950)	1.115	10,60	1,50 + 1,60 + 1,60	2,86	3,27	3,27		9,40 (3,20 - 10,50)		4,16 A		2.260 (490 - 3.240)	1.130	10,60
9[2] + 12 + 15	2,24	2,56	3,20		8,00 (3,00 - 8,80)	3,59 A			2.230 (480 - 3.100)	1.115	10,60	1,50 + 1,60 + 1,80	2,63	3,01	3,76		9,40 (3,20 - 10,50)		4,18 A		2.250 (490 - 3.230)	1.125	10,60
9[2] + 12 + 18	2,03	2,33	3,64		8,00 (3,00 - 8,80)	3,92 A			2.040 (520 - 2.800)	1.020	9,70	1,30 + 1,50 + 2,10	2,39	2,73	4,28		9,40 (3,20 - 10,50)		4,39 A		2.140 (520 - 3.070)	1.070	10,10
9[2] + 12 + 21	1,87	2,13	4,00		8,00 (3,00 - 9,00)	3,92 A			2.040 (520 - 2.870)	1.020	9,70	1,20 + 1,40 + 2,30	2,19	2,51	4,70		9,40 (3,20 - 10,60)		4,39 A		2.140 (520 - 3.140)	1.070	10,10
9[2] + 12 + 24	1,72	1,97	4,31		8,00 (3,00 - 9,00)	4,04 A			1.980 (520 - 2.800)	990	9,40	1,10 + 1,30 + 2,40	2,02	2,31	5,07		9,40 (3,20 - 10,60)		4,43 A		2.120 (530 - 3.120)	1.060	10,00
9[2] + 15 + 15	2,08	2,96	2,96		8,00 (3,00 - 8,80)	3,59 A			2.230 (480 - 3.030)	1.115	10,60	1,30 + 1,70 + 1,70	2,44	3,48	3,48		9,40 (3,20 - 10,50)		4,20 A		2.240 (490 - 3.210)	1.120	10,50
9[2] + 15 + 18	1,90	2,71	3,39		8,00 (3,00 - 9,00)	3,92 A			2.040 (520 - 2.870)	1.020	9,70	1,20 + 1,60 + 1,90	2,23	3,19	3,98		9,40 (3,20 - 10,60)		4,41 A		2.130 (530 - 3.120)	1.065	10,00
9[2] + 15 + 21	1,75	2,50	3,75		8,00 (3,00 - 9,00)	3,92 A			2.040 (520 - 2.870)	1.020	9,70	1,10 + 1,50 + 2,20	2,05	2,94	4,41		9,40 (3,20 - 10,60)		4,41 A		2.130 (530 - 3.120)	1.065	10,00
9[2] + 18 + 18	1,74	3,13	3,13		8,00 (3,00 - 9,00)	4,17 A			1.920 (570 - 2.650)	960	9,10	1,10 + 1,80 + 1,80	2,06	3,67	3,67		9,40 (3,20 - 10,60)		4,61 A		2.040 (600 - 2.990)	1.020	9,60
12 + 12 + 12	2,66	2,66	2,66		7,98 (3,00 - 8,60)	3,68 A			2.170 (480 - 2.880)	1.085	10,30	1,60 + 1,60 + 1,60	3,13	3,13	3,13		9,39 (3,20 - 10,50)		4,21 A		2.230 (490 - 3.200)	1.115	10,50
12 + 12 + 15	2,46	2,46	3,08		8,00 (3,00 - 8,80)	3,69 A			2.170 (480 - 3.030)	1.085	10,30	1,50 + 1,50 + 1,70	2,89	2,89	3,62		9,40 (3,20 - 10,50)		4,23 A		2.220 (490 - 3.190)	1.110	10,40
12 + 12 + 18	2,25	2,25	3,50		8,00 (3,00 - 8,80)	4,04 A			1.980 (520 - 2.720)	990	9,40	1,50 + 1,50 + 2,00	2,64	2,64	4,12		9,40 (3,20 - 10,60)		4,45 A		2.110 (530 - 3.100)	1.055	9,90
12 + 12 + 21	2,06	2,06	3,88		8,00 (3,00 - 9,00)	4,04 A			1.980 (520 - 2.870)	990	9,40	1,30 + 1,30 + 2,30	2,43	2,43	4,54		9,40 (3,20 - 10,60)		4,45 A		2.110 (530 - 3.100)	1.055	9,90
12 + 12 + 24	1,91	1,91	4,18		8,00 (3,00 - 9,00)	4,04 A			1.980 (520 - 2.800)	990	9,40	1,20 + 1,20 + 2,40	2,24	2,24	4,92		9,40 (3,20 - 10,60)		4,48 A		2.100 (530 - 3.090)	1.050	9,90
12 + 15 + 15	2,28	2,86	2,86		8,00 (3,00 - 8,80)	3,69 A			2.170 (480 - 2.950)	1.085	10,30	1,50 + 1,70 + 1,70	2,68	3,36	3,36		9,40 (3,20 - 10,60)		4,25 A		2.210 (490 - 3.240)	1.105	10,40
12 + 15 + 18	2,10	2,62	3,28		8,00 (3,00 - 9,00)	4,04 A			1.980 (520 - 2.800)	990	9,40	1,40 + 1,60 + 1,90	2,47	3,08	3,85		9,40 (3,20 - 10,60)		4,48 A		2.100 (530 - 3.090)	1.050	9,90
12 + 15 + 21	1,94	2,42	3,64		8,00 (3,00 - 9,00)	4,04 A			1.980 (520 - 2.800)	990	9,40	1,30 + 1,50 + 2,10	2,28	2,85	4,27		9,40 (3,20 - 10,60)		4,48 A		2.100 (530 - 3.090)	1.050	9,90
12 + 18 + 18	1,94	3,03	3,03		8,00 (3,00 - 9,00)	4,17 A			1.920 (570 - 2.650)	960	9,10	1,30 + 1,70 + 1,70	2,28	3,56	3,56		9,40 (3,20 - 10,60)		4,65 A		2.020 (620 - 2.960)	1.010	9,50
15 + 15 + 15	2,66	2,66	2,66		7,98 (3,00 - 9,00)	3,68 A			2.170 (480 - 3.100)	1.085	10,30	1,60 + 1,60 + 1,60	3,13	3,13	3,13		9,39 (3,20 - 10,60)		4,27 A		2.200 (490 - 3.220)	1.100	10,30
15 + 15 + 18	2,46	2,46	3,08		8,00 (3,00 - 9,00	4,04 A			1.980 (520 - 2.800)	990	9,40	1,50 + 1,50 + 1,70	2,89	2,89	3,62		9,40 (3,20 - 10,60		4,48 A		2.100 (560 - 3.080)	1.050	9,90

1) For Etherea. 4 Way 60x60 cassette and Low static pressure hide away. 2) For Floor console. 3) SEER and SCOP are showed only on the 100% capacity combination as requested by the ErP directive. On the other capacity combinations, EER and COP are show. Input Power, Annual consumption is show following the ErP directive only on the 100% capacity combination as requested by the ErP directive.
* Data for not simultaneous operation.

Free Multi combinations table

Free Multi 4x1 CU-4E27PBE. Minimum capacity connected: 4,5 kW. Maximum capacity connected: 13,6 kW

Indoor unit capacity	Cooling capacity (kW) Rooms					EER	SEER	Pdesign	Input power rating	Annual consumption	Current	Moisture removal	Heating capacity (kW) Rooms					COP	SCOP	Pdesign at -10°C	Input power rating	Annual consumption	Current
	Room A	Room B	Room C	Room D	Total (Min - Max)	W/W	W/W	kWh	W	kWh	230V (A)	Volume (l/h)	Room A	Room B	Room C	Room D	Total (Min - Max)	W/W	W/W	kWh	W	kWh	230V (A)
4 Rooms																							
5 + 5 + 5 + 5	1,60	1,60	1,60	1,60	6,40 (3,00 - 9,20)	4,30 A			1.490 (520 - 2.950)	745	7,10	1,00 + 1,00 + 1,00 + 1,00	2,35	2,35	2,35	2,35	9,40 (4,20 - 10,60)	4,43 A			2.120 (700 - 3.110)	1.060	10,00
5 + 5 + 5 + 7	1,60	1,60	1,60	2,00	6,80 (3,00 - 9,20)	4,28 A			1.590 (520 - 2.870)	795	7,60	1,00 + 1,00 + 1,00 + 1,30	2,21	2,21	2,21	2,77	9,40 (4,20 - 10,60)	4,45 A			2.110 (700 - 3.100)	1.055	9,90
5 + 5 + 5 + 9¹	1,60	1,60	1,60	2,50	7,30 (3,00 - 9,20)	4,15 A			1.760 (520 - 2.870)	880	8,30	1,00 + 1,00 + 1,00 + 1,50	2,06	2,06	2,06	3,22	9,40 (4,20 - 10,60)	4,45 A			2.110 (700 - 3.100)	1.055	9,90
5 + 5 + 5 + 9²	1,60	1,60	1,60	2,80	7,60 (3,00 - 9,20)	4,06 A			1.870 (520 - 2.870)	935	8,90	1,00 + 1,00 + 1,00 + 1,60	1,98	1,98	1,98	3,46	9,40 (4,20 - 10,60)	4,45 A			2.110 (700 - 3.100)	1.055	9,90
5 + 5 + 5 + 12	1,60	1,60	1,60	3,20	8,00 (3,00 - 9,20)	4,04 A			1.980 (530 - 2.870)	990	9,40	1,00 + 1,00 + 1,00 + 1,80	1,88	1,88	1,88	3,76	9,40 (4,20 - 10,60)	4,50 A			2.090 (700 - 3.060)	1.045	9,80
5 + 5 + 5 + 15	1,45	1,45	1,45	3,65	8,00 (3,00 - 9,20)	4,04 A			1.980 (530 - 2.870)	990	9,40	0,90 + 0,90 + 0,90 + 2,10	1,71	1,71	1,71	4,27	9,40 (4,20 - 10,60)	4,52 A			2.080 (700 - 3.050)	1.040	9,80
5 + 5 + 5 + 18	1,31	1,31	1,31	4,07	8,00 (3,00 - 9,20)	4,28 A			1.870 (620 - 2.730)	935	8,90	0,80 + 0,80 + 0,80 + 2,30	1,53	1,53	1,53	4,81	9,40 (4,20 - 10,60)	4,59 A			2.050 (780 - 2.930)	1.025	9,60
5 + 5 + 5 + 21	1,19	1,19	1,19	4,43	8,00 (3,00 - 9,20)	4,28 A			1.870 (620 - 2.730)	935	8,90	0,70 + 0,70 + 0,70 + 2,50	1,39	1,39	1,39	5,23	9,40 (4,20 - 10,60)	4,59 A			2.050 (780 - 2.930)	1.025	9,60
5 + 5 + 5 + 24	1,08	1,08	1,08	4,76	8,00 (3,00 - 9,20)	4,28 A			1.870 (620 - 2.660)	935	8,90	0,70 + 0,70 + 0,70 + 2,60	1,27	1,27	1,27	5,59	9,40 (4,20 - 10,60)	4,61 A			2.040 (790 - 2.920)	1.020	9,60
5 + 5 + 7 + 7	1,60	1,60	2,00	2,00	7,20 (3,00 - 9,20)	4,24 A			1.700 (530 - 2.870)	850	8,10	1,00 + 1,00 + 1,30 + 1,30	2,09	2,09	2,61	2,61	9,40 (4,20 - 10,60)	4,48 A			2.100 (700 - 3.080)	1.050	9,90
5 + 5 + 7 + 9¹	1,60	1,60	2,00	2,50	7,70 (3,00 - 9,20)	4,14 A			1.860 (530 - 2.870)	930	8,80	1,00 + 1,00 + 1,30 + 1,50	1,95	1,95	2,44	3,06	9,40 (4,20 - 10,60)	4,48 A			2.100 (700 - 3.080)	1.050	9,90
5 + 5 + 7 + 9²	1,60	1,60	2,00	2,80	8,00 (3,00 - 9,20)	4,04 A			1.980 (530 - 2.870)	990	9,40	1,00 + 1,00 + 1,30 + 1,60	1,88	1,88	2,35	3,29	9,40 (4,20 - 10,60)	4,48 A			2.100 (700 - 3.080)	1.050	9,90
5 + 5 + 7 + 12	1,52	1,52	1,90	3,06	8,00 (3,00 - 9,20)	4,17 A			1.920 (530 - 2.870)	960	9,10	1,00 + 1,00 + 1,20 + 1,70	1,79	1,79	2,24	3,58	9,40 (4,20 - 10,60)	4,52 A			2.080 (700 - 3.050)	1.040	9,80
5 + 5 + 7 + 15	1,39	1,39	1,74	3,48	8,00 (3,00 - 9,20)	4,17 A			1.920 (560 - 2.870)	960	9,10	0,90 + 0,90 + 1,10 + 2,00	1,63	1,63	2,04	4,10	9,40 (4,20 - 10,60)	4,54 A			2.070 (730 - 3.040)	1.035	9,70
5 + 5 + 7 + 18	1,25	1,25	1,57	3,93	8,00 (3,00 - 9,20)	4,28 A			1.870 (620 - 2.650)	935	8,90	0,80 + 0,80 + 1,00 + 2,30	1,47	1,47	1,84	4,62	9,40 (4,20 - 10,60)	4,61 A			2.040 (780 - 2.920)	1.020	9,60
5 + 5 + 7 + 21	1,14	1,14	1,43	4,29	8,00 (3,00 - 9,20)	4,28 A			1.870 (620 - 2.650)	935	8,90	0,70 + 0,70 + 0,90 + 2,40	1,34	1,34	1,68	5,04	9,40 (4,20 - 10,60)	4,61 A			2.040 (780 - 2.920)	1.020	9,60
5 + 5 + 7 + 24	1,05	1,05	1,31	4,59	8,00 (3,00 - 9,20)	4,28 A			1.870 (620 - 2.660)	935	8,90	0,70 + 0,70 + 0,80 + 2,50	1,23	1,23	1,54	5,40	9,40 (4,20 - 10,60)	4,63 A			2.030 (810 - 2.970)	1.015	9,50
5 + 5 + 9¹ + 9¹	1,56	1,56	2,44	2,44	8,00 (3,00 - 9,20)	4,04 A			1.980 (530 - 2.870)	990	9,40	1,00 + 1,00 + 1,50 + 1,50	1,83	1,83	2,87	2,87	9,40 (4,20 - 10,60)	4,48 A			2.100 (700 - 3.080)	1.050	9,90
5 + 5 + 9¹ + 9²	1,51	1,51	2,34	2,64	8,00 (3,00 - 9,20)	4,04 A			1.980 (530 - 2.870)	990	9,40	1,00 + 1,00 + 1,50 + 1,60	1,77	1,77	2,76	3,10	9,40 (4,20 - 10,60)	4,48 A			2.100 (700 - 3.080)	1.050	9,90
5 + 5 + 9¹ + 12	1,44	1,44	2,24	2,88	8,00 (3,00 - 9,20)	4,17 A			1.920 (530 - 2.870)	960	9,10	0,90 + 0,90 + 1,50 + 1,70	1,69	1,69	2,64	3,38	9,40 (4,20 - 10,60)	4,52 A			2.080 (700 - 3.050)	1.040	9,80
5 + 5 + 9¹ + 15	1,32	1,32	2,06	3,30	8,00 (3,00 - 9,20)	4,17 A			1.920 (560 - 2.870)	960	9,10	0,80 + 0,80 + 1,30 + 1,90	1,55	1,55	2,42	3,88	9,40 (4,20 - 10,60)	4,54 A			2.070 (730 - 3.040)	1.035	9,70
5 + 5 + 9¹ + 18	1,20	1,20	1,86	3,74	8,00 (3,00 - 9,20)	4,28 A			1.870 (620 - 2.650)	935	8,90	0,70 + 0,70 + 1,20 + 2,20	1,41	1,41	2,19	4,39	9,40 (4,20 - 10,60)	4,61 A			2.040 (780 - 2.920)	1.020	9,60
5 + 5 + 9¹ + 21	1,09	1,09	1,71	4,11	8,00 (3,00 - 9,20)	4,28 A			1.870 (620 - 2.650)	935	8,90	0,70 + 0,70 + 1,10 + 2,30	1,29	1,29	2,00	4,82	9,40 (4,20 - 10,60)	4,61 A			2.040 (780 - 2.920)	1.020	9,60
5 + 5 + 9¹ + 24	1,01	1,01	1,57	4,41	8,00 (3,00 - 9,20)	4,28 A			1.870 (620 - 2.660)	935	8,90	0,70 + 0,70 + 1,00 + 2,40	1,18	1,18	1,85	5,19	9,40 (4,20 - 10,60)	4,63 A			2.030 (810 - 2.970)	1.015	9,50
5 + 5 + 9² + 9²	1,45	1,45	2,55	2,55	8,00 (3,00 - 9,20)	4,04 A			1.980 (530 - 2.870)	990	9,40	0,90 + 0,90 + 1,60 + 1,60	1,71	1,71	2,99	2,99	9,40 (4,20 - 10,60)	4,48 A			2.100 (700 - 3.080)	1.050	9,90
5 + 5 + 9² + 12	1,39	1,39	2,43	2,79	8,00 (3,00 - 9,20)	4,17 A			1.920 (530 - 2.870)	960	9,10	0,90 + 0,90 + 1,50 + 1,60	1,63	1,63	2,86	3,28	9,40 (4,20 - 10,60)	4,52 A			2.080 (700 - 3.050)	1.040	9,80
5 + 5 + 9² + 15	1,28	1,28	2,24	3,20	8,00 (3,00 - 9,20)	4,17 A			1.920 (560 - 2.870)	960	9,10	0,80 + 0,80 + 1,50 + 1,80	1,50	1,50	2,63	3,77	9,40 (4,20 - 10,60)	4,54 A			2.070 (730 - 3.040)	1.035	9,70
5 + 5 + 9² + 18	1,16	1,16	2,04	3,64	8,00 (3,00 - 9,20)	4,28 A			1.870 (620 - 2.650)	935	8,90	0,70 + 0,70 + 1,30 + 2,10	1,37	1,37	2,39	4,27	9,40 (4,20 - 10,60)	4,61 A			2.040 (780 - 2.920)	1.020	9,60
5 + 5 + 9² + 21	1,07	1,07	1,86	4,00	8,00 (3,00 - 9,20)	4,28 A			1.870 (620 - 2.650)	935	8,90	0,70 + 0,70 + 1,20 + 2,30	1,25	1,25	2,19	4,71	9,40 (4,20 - 10,60)	4,61 A			2.040 (780 - 2.920)	1.020	9,60
5 + 5 + 9² + 24	0,98	0,98	1,72	4,32	8,00 (3,00 - 9,20)	4,28 A			1.870 (620 - 2.660)	935	8,90	0,70 + 0,70 + 1,10 + 2,40	1,16	1,16	2,02	5,06	9,40 (4,20 - 10,60)	4,63 A			2.030 (810 - 2.970)	1.015	9,50
5 + 5 + 12 + 12	1,33	1,33	2,67	2,67	8,00 (3,00 - 9,20)	4,17 A			1.920 (570 - 2.800)	960	9,10	0,80 + 0,80 + 1,60 + 1,60	1,57	1,57	3,13	3,13	9,40 (4,20 - 10,60)	4,56 A			2.060 (730 - 3.020)	1.030	9,70
5 + 5 + 12 + 15	1,23	1,23	2,46	3,08	8,00 (3,00 - 9,20)	4,17 A			1.920 (570 - 2.800)	960	9,10	0,80 + 0,80 + 1,50 + 1,70	1,45	1,45	2,88	3,62	9,40 (4,20 - 10,60)	4,59 A			2.050 (740 - 3.010)	1.025	9,60
5 + 5 + 12 + 18	1,12	1,12	2,25	3,51	8,00 (3,00 - 9,20)	4,28 A			1.870 (620 - 2.660)	935	8,90	0,70 + 0,70 + 1,50 + 2,00	1,32	1,32	2,64	4,12	9,40 (4,20 - 10,60)	4,63 A			2.030 (820 - 2.960)	1.015	9,50
5 + 5 + 12 + 21	1,03	1,03	2,06	3,88	8,00 (3,00 - 9,20)	4,28 A			1.870 (620 - 2.660)	935	8,90	0,70 + 0,70 + 1,30 + 2,30	1,21	1,21	2,43	4,55	9,40 (4,20 - 10,60)	4,63 A			2.030 (820 - 2.960)	1.015	9,50
5 + 5 + 12 + 24	0,96	0,96	1,90	4,18	8,00 (3,00 - 9,20)	4,28 A			1.870 (630 - 2.660)	935	8,90	0,70 + 0,70 + 1,20 + 2,40	1,12	1,12	2,24	4,92	9,40 (4,20 - 10,60)	4,65 A			2.020 (820 - 2.950)	1.010	9,50
5 + 5 + 15 + 15	1,14	1,14	2,86	2,86	8,00 (3,00 - 9,20)	4,17 A			1.920 (570 - 2.800)	960	9,10	0,70 + 0,70 + 1,70 + 1,70	1,34	1,34	3,36	3,36	9,40 (4,20 - 10,60)	4,61 A			2.040 (740 - 3.000)	1.020	9,60
5 + 5 + 15 + 18	1,05	1,05	2,62	3,28	8,00 (3,00 - 9,20)	4,28 A			1.870 (620 - 2.660)	935	8,90	0,70 + 0,70 + 1,60 + 1,90	1,23	1,23	3,08	3,86	9,40 (4,20 - 10,60)	4,65 A			2.020 (820 - 2.950)	1.010	9,50
5 + 5 + 15 + 21	0,97	0,97	2,42	3,64	8,00 (3,00 - 9,20)	4,28 A			1.870 (620 - 2.660)	935	8,90	0,70 + 0,70 + 1,50 + 2,10	1,14	1,14	2,85	4,27	9,40 (4,20 - 10,60)	4,65 A			2.020 (820 - 2.950)	1.010	9,50
5 + 5 + 18 + 18	0,97	0,97	3,03	3,03	8,00 (3,00 - 9,20)	4,26 A			1.880 (690 - 2.600)	940	8,90	0,70 + 0,70 + 1,70 + 1,70	1,14	1,14	3,56	3,56	9,40 (4,20 - 10,60)	4,56 A			2.060 (950 - 2.920)	1.030	9,70
5 + 7 + 7 + 7	1,60	2,00	2,00	2,00	7,60 (3,00 - 9,20)	4,06 A			1.870 (530 - 2.870)	935	8,90	1,00 + 1,30 + 1,30 + 1,30	1,99	2,47	2,47	2,47	9,40 (4,20 - 10,60)	4,50 A			2.090 (700 - 3.070)	1.045	9,80
5 + 7 + 7 + 9¹	1,57	1,98	1,98	2,47	8,00 (3,00 - 9,20)	4,04 A			1.980 (530 - 2.870)	990	9,40	1,00 + 1,30 + 1,30 + 1,50	1,86	2,32	2,32	2,90	9,40 (4,20 - 10,60)	4,50 A			2.090 (700 - 3.070)	1.045	9,80
5 + 7 + 7 + 9²	1,52	1,90	1,90	2,68	8,00 (3,00 - 9,20)	4,04 A			1.980 (530 - 2.870)	990	9,40	1,00 + 1,20 + 1,20 + 1,60	1,79	2,24	2,24	3,13	9,40 (4,20 - 10,60)	4,50 A			2.090 (700 - 3.070)	1.045	9,80
5 + 7 + 7 + 12	1,45	1,82	1,82	2,91	8,00 (3,00 - 9,20)	4,17 A			1.920 (570 - 2.800)	960	9,10	0,90 + 1,20 + 1,20 + 1,70	1,70	2,14	2,14	3,42	9,40 (4,20 - 10,60)	4,54 A			2.070 (730 - 3.040)	1.035	9,70
5 + 7 + 7 + 15	1,33	1,67	1,67	3,33	8,00 (3,00 - 9,20)	4,17 A			1.920 (570 - 2.800)	960	9,10	0,80 + 1,10 + 1,10 + 1,90	1,56	1,96	1,96	3,92	9,40 (4,20 - 10,60)	4,56 A			2.060 (730 - 3.030)	1.030	9,70
5 + 7 + 7 + 18	1,21	1,51	1,51	3,77	8,00 (3,00 - 9,20)	4,28 A			1.870 (620 - 2.650)	935	8,90	0,80 + 1,00 + 1,00 + 2,20	1,42	1,77	1,77	4,44	9,40 (4,20 - 10,60)	4,63 A			2.030 (810 - 2.970)	1.015	9,50
5 + 7 + 7 + 21	1,10	1,38	1,38	4,14	8,00 (3,00 - 9,20)	4,28 A			1.870 (620 - 2.650)	935	8,90	0,70 + 0,90 + 0,90 + 2,40	1,30	1,62	1,62	4,86	9,40 (4,20 - 10,60)	4,63 A			2.030 (810 - 2.970)	1.015	9,50
5 + 7 + 7 + 24	1,02	1,27	1,27	4,44	8,00 (3,00 - 9,20)	4,28 A			1.870 (630 - 2.660)	935	8,90	0,70 + 0,80 + 0,80 + 2,50	1,19	1,49	1,49	5,23	9,40 (4,20 - 10,60)	4,63 A			2.030 (820 - 2.960)	1.015	9,50
5 + 7 + 9¹ + 9¹	1,48	1,86	2,33	2,33	8,00 (3,00 - 9,20)	4,04 A			1.980 (530 - 2.870)	990	9,40	0,90 + 1,20 + 1,50 + 1,50	1,75	2,19	2,73	2,73	9,40 (4,20 - 10,60)	4,50 A			2.090 (700 - 3.070)	1.045	9,80
5 + 7 + 9¹ + 9²	1,43	1,80	2,25	2,52	8,00 (3,00 - 9,20)	4,04 A			1.980 (530 - 2.870)	990	9,40	0,90 + 1,20 + 1,50 + 1,50	1,69	2,11	2,64	2,96	9,40 (4,20 - 10,60)	4,50 A			2.090 (700 - 3.070)	1.045	9,80
5 + 7 + 9¹ + 12	1,38	1,72	2,15	2,75	8,00 (3,00 - 9,20)	4,17 A			1.920 (570 - 2.800)	960	9,10	0,90 + 1,10 + 1,40 + 1,60	1,62	2,02	2,53	3,23	9,40 (4,20 - 10,60)	4,54 A			2.070 (730 - 3.040)	1.035	9,70
5 + 7 + 9¹ + 15	1,27	1,58	1,98	3,17	8,00 (3,00 - 9,20)	4,17 A			1.920 (570 - 2.800)	960	9,10	0,80 + 1,00 + 1,30 + 1,80	1,49	1,86	2,33	3,72	9,40 (4,20 - 10,60)	4,56 A			2.060 (730 - 3.030)	1.030	9,70
5 + 7 + 9¹ + 18	1,15	1,44	1,80	3,61	8,00 (3,00 - 9,20)	4,28 A			1.870 (620 - 2.650)	935	8,90	0,70 + 0,90 + 1,20 + 2,10	1,35	1,69	2,12	4,24	9,40 (4,20 - 10,60)	4,63 A			2.030 (810 - 2.970)	1.015	9,50
5 + 7 + 9¹ + 21	1,06	1,32	1,65	3,97	8,00 (3,00 - 9,20)	4,28 A			1.870 (620 - 2.650)	935	8,90	0,70 + 0,80 + 1,10 + 2,30	1,24	1,55	1,94	4,67	9,40 (4,20 - 10,60)	4,63 A			2.030 (810 - 2.970)	1.015	9,50
5 + 7 + 9¹ + 24	0,98	1,22	1,53	4,27	8,00 (3,00 - 9,20)	4,28 A			1.870 (630 - 2.660)	935	8,90	0,70 + 0,80 + 1,00 + 2,40	1,15	1,44	1,79	5,02	9,40 (4,20 - 10,60)	4,63 A			2.030 (820 - 2.960)	1.015	9,50
5 + 7 + 9² + 9²	1,40	1,74	2,43	2,43	8,00 (3,00 - 9,20)	4,04 A			1.980 (530 - 2.870)	990	9,40	0,90 + 1,10 + 1,50 + 1,50	1,63	2,05	2,86	2,86	9,40 (4,20 - 10,60)	4,50 A			2.090 (700 - 3.070)	1.045	9,80
5 + 7 + 9² + 12	1,33	1,67	2,33	2,67	8,00 (3,00 - 9,20)	4,17 A			1.920 (570 - 2.800)	960	9,10	0,80 + 1,10 + 1,50 + 1,60	1,57	1,96	2,74	3,13	9,40 (4,20 - 10,60)	4,54 A			2.070 (730 - 3.040)	1.035	9,70
5 + 7 + 9² + 15	1,23	1,54	2,15	3,08	8,00 (3,00 - 9,20)	4,17 A			1.920 (570 - 2.800)	960	9,10	0,80 + 1,00 + 1,40 + 1,70	1,44	1,81	2,53	3,62	9,40 (4,20 - 10,60)	4,56 A			2.060 (730 - 3.030)	1.030	9,70
5 + 7 + 9² + 18	1,12	1,40	1,96	3,52	8,00 (3,00 - 9,20)	4,28 A			1.870 (620 - 2.650)	935	8,90	0,70 + 0,90 + 1,30 + 2,00	1,32	1,65	2,31	4,12	9,40 (4,20 - 10,60)	4,63 A			2.030 (810 - 2.970)	1.015	9,50
5 + 7 + 9² + 21	1,03	1,29	1,81	3,87	8,00 (3,00 - 9,20)	4,28 A			1.870 (620 - 2.650)	935	8,90	0,70 + 0,80 + 1,20 + 2,30	1,21	1,52	2,12	4,55	9,40 (4,20 - 10,60)	4,63 A			2.030 (810 - 2.970)	1.015	9,50
5 + 7 + 9² + 24	0,96	1,19	1,67	4,18	8,00 (3,00 - 9,20)	4,28 A			1.870 (630 - 2.660)	935	8,90	0,70 + 0,70 + 1,10 + 2,40	1,12	1,40	1,96	4,92	9,40 (4,20 - 10,60)	4,63 A			2.030 (820 - 2.960)	1.015	9,50
5 + 7 + 12 + 12	1,28	1,60	2,56	2,56	8,00 (3,00 - 9,20)	4,17 A			1.920 (570 - 2.800)	960	9,10	0,80 + 1,00 + 1,60 + 1,60	1,50	1,88	3,01	3,01	9,40 (4,20 - 10,60)	4,59 A			2.050 (740 - 3.010)	1.025	9,60
5 + 7 + 12 + 15	1,19	1,48	2,37	2,96	8,00 (3,00 - 9,20)	4,17 A			1.920 (570 - 2.800)	960	9,10	0,70 + 0,90 + 1,50 + 1,70	1,39	1,74	2,79	3,48	9,40 (4,20 - 10,60)	4,61 A			2.040 (740 - 3.000)	1.020	9,60
5 + 7 + 12 + 18	1,08	1,36	2,17	3,39	8,00 (3,00 - 9,20)	4,28 A			1.870 (630 - 2.660)	935	8,90	0,70 + 0,90 + 1,40 + 1,90	1,27	1,59	2,55	3,99	9,40 (4,20 - 10,60)	4,65 A			2.020 (820 - 2.950)	1.010	9,50
5 + 7 + 12 + 21	1,00	1,25	2,00	3,75	8,00 (3,00 - 9,20)	4,28 A			1.870 (630 - 2.660)	935	8,90	0,70 + 0,80 + 1,30 + 2,20	1,17	1,47	2,35	4,41	9,40 (4,20 - 10,60)	4,65 A			2.020 (820 - 2.950)	1.010	9,50
5 + 7 + 15 + 15	1,10	1,38	2,76	2,76	8,00 (3,00 - 9,20)	4,17 A			1.920 (570 - 2.800)	960	9,10	0,70 + 0,90 + 1,60 + 1,60	1,30	1,62	3,24	3,24	9,40 (4,20 - 10,60)	4,61 A			2.040 (740 - 2.990)	1.020	9,60
5 + 7 + 15 + 18	1,02	1,27	2,54	3,17	8,00 (3,00 - 9,20)	4,28 A			1.870 (630 - 2.660)	935	8,90	0,70 + 0,80 + 1,60 + 1,80	1,19	1,49	2,98	3,74	9,40 (4,20 - 10,60)	4,65 A			2.020 (830 - 2.940)	1.010	9,50
5 + 7 + 15 + 21	0,94	1,18	2,35	3,53	8,00 (3,00 - 9,20)	4,28 A			1.870 (630 - 2.660)	935	8,90	0,70 + 0,70 + 1,50 + 2,00	1,11	1,38	2,76	4,15	9,40 (4,20 - 10,60)	4,65 A			2.020 (830 - 2.940)	1.010	9,50
5 + 7 + 18 + 18	0,94	1,18	2,94	2,94	8,00 (3,00 - 9,20)	4,23 A			1.890 (690 - 2.600)	945	9,00	0,70 + 0,70 + 1,70 + 1,70	1,10	1,38	3,46	3,46	9,40 (4,20 - 10,60)	4,56 A			2.060 (950 - 2.970)	1.030	9,70
5 + 9¹ + 9¹ + 9¹	1,40	2,20	2,20	2,20	8,00 (3,00 - 9,20)	4,04 A			1.980 (530 - 2.870)	990	9,40	0,90 + 1,40 + 1,40 + 1,40	1,66	2,58	2,58	2,58	9,40 (4,20 - 10,60)	4,50 A			2.090 (700 - 3.070)	1.045	9,80
5 + 9¹ + 9¹ + 9²	1,36	2,13	2,13	2,38	8,00 (3,00 - 9,20)	4,04 A			1.980 (530 - 2.870)	990	9,40	0,90 + 1,40 + 1,40 + 1,50	1,60	2,50	2,50	2,80	9,40 (4,20 - 10,60)	4,50 A			2.090 (700 - 3.070)	1.045	9,80
5 + 9¹ + 9¹ + 12	1,31	2,04	2,04	2,61	8,00 (3,00 - 9,20)	4,17 A			1.920 (570 - 2.800)	960	9,10	0,80 + 1,30 + 1,30 + 1,60	1,53	2,40	2,40	3,07	9,40 (4,20 - 10,60)	4,54 A			2.070 (730 - 3.040)	1.035	9,70
5 + 9¹ + 9¹ + 15	1,20	1,89	1,89	3,02	8,00 (3,00 - 9,20)	4,17 A			1.920 (570 - 2.800)	960	9,10	0,70 + 1,20 + 1,20 + 1,70	1,41	2,22	2,22	3,55	9,40 (4,20 - 10,60)	4,56 A			2.060 (730 - 3.030)	1.030	9,70
5 + 9¹ + 9¹ + 18	1,10	1,72	1,72	3,46	8,00 (3,00 - 9,20)	4,28 A			1.870 (620 - 2.650)	935	8,90	0,70 + 1,10 + 1,10 + 2,00	1,29	2,03	2,03	4,05	9,40 (4,20 - 10,60)	4,63 A			2.030 (810 - 2.970)	1.015	9,50
5 + 9¹ + 9¹ + 21	1,01	1,59	1,59	3,81	8,00 (3,00 - 9,20)	4,28 A			1.870 (620 - 2.650)	935	8,90	0,70 + 1,00 + 1,00 + 2,20	1,18	1,87	1,87	4,48	9,40 (4,20 - 10,60)	4,63 A			2.030 (810 - 2.970)	1.015	9,50
5 + 9¹ + 9¹ + 24	0,94	1,47	1,47	4,12	8,00 (3,00 - 9,20)	4,28 A			1.870 (630 - 2.660)	935	8,90	0,70 + 0,90 + 0,90 + 2,30	1,10	1,73	1,73	4,84	9,40 (4,20 - 10,60)	4,63 A			2.030 (820 - 2.960)	1.015	9,50
5 + 9¹ + 9² + 9²	1,32	2,06	2,31	2,31	8,00 (3,00 - 9,20)	4,04 A			1.980 (530 - 2.870)	990	9,40	0,80 + 1,30 + 1,50 + 1,50	1,55	2,43	2,71	2,71	9,40 (4,20 - 10,60)	4,50 A			2.090 (700 - 3.070)	1.045	9,80
5 + 9¹ + 9² + 12	1,27	1,98	2,22	2,53	8,00 (3,00 - 9,20)	4,17 A			1.920 (570 - 2.800)	960	9,10	0,80 + 1,30 + 1,40 + 1,60	1,48	2,33	2,61	2,98	9,40 (4,20 - 10,60)	4,54 A			2.070 (730 - 3.040)	1.035	9,70
5 + 9¹ + 9² + 15	1,17	1,83	2,06	2,94	8,00 (3,00 - 9,20)	4,17 A			1.920 (570 - 2.800)	960	9,10	0,70 + 1,20 + 1,30 + 1,70	1,38	2,16	2,41	3,45	9,40 (4,20 - 10,60)	4,56 A			2.060 (730 - 3.030)	1.030	9,70
5 + 9¹ + 9² + 18	1,08	1,68	1,88	3,36	8,00 (3,00 - 9,20)	4,28 A			1.870 (620 - 2.650)	935	8,90	0,70 + 1,10 + 1,20 + 1,90	1,26	1,97	2,21	3,96	9,40 (4,20 - 10,60)	4,63 A			2.030 (810 - 2.970)	1.015	9,50
5 + 9¹ + 9² + 21	0,99	1,55	1,74	3,72	8,00 (3,00 - 9,20)	4,28 A			1.870 (620 - 2.650)	935	8,90	0,70 + 1,00 + 1,10 + 2,20	1,17	1,82	2,04	4,37	9,40 (4,20 - 10,60)	4,63 A		

Free Multi 4x1 CU-4E27PBE. Minimum capacity connected: 4,5 kW. Maximum capacity connected: 13,6 kW

Indoor unit capacity	Cooling capacity (kW) Rooms					EER	SEER	Pdesign	Input power rating	Annual consumption	Current	Moisture removal	Heating capacity (kW) Rooms					COP	SCOP	Pdesign at -10°C	Input power rating	Annual consumption	Current
	Room A	Room B	Room C	Room D	Total (Min - Max)	W/W	W/W	kWh	W	kWh	230V (A)	Volume (l/h)	Room A	Room B	Room C	Room D	Total (Min - Max)	W/W	W/W	kWh	W	kWh	230V (A)
5 + 9² + 15 + 18	0,95	1,67	2,39	2,99	8,00 (3,00 - 9,20)	4,28 A			1.870 (630 - 2.660)	935	8,90	0,70 + 1,10 + 1,50 + 1,70	1,12	1,96	2,81	3,51	9,40 (4,20 - 10,60)	4,65 A			2.020 (830 - 2.940)	1.010	9,50
5 + 12 + 12 + 12	1,13	2,29	2,29	2,29	8,00 (3,00 - 9,20)	4,17 A			1.920 (570 - 2.800)	960	9,10	0,70 + 1,50 + 1,50 + 1,50	1,33	2,69	2,69	2,69	9,40 (4,20 - 10,60)	4,63 A			2.030 (740 - 2.980)	1.015	9,50
5 + 12 + 12 + 15	1,07	2,13	2,13	2,67	8,00 (3,00 - 9,20)	4,17 A			1.920 (570 - 2.720)	960	9,10	0,70 + 1,40 + 1,40 + 1,60	1,25	2,51	2,51	3,13	9,40 (4,20 - 10,60)	4,63 A			2.030 (770 - 2.970)	1.015	9,50
5 + 12 + 12 + 18	0,98	1,97	1,97	3,08	8,00 (3,00 - 9,20)	4,28 A			1.870 (630 - 2.660)	935	8,90	0,70 + 1,30 + 1,30 + 1,70	1,16	2,31	2,31	3,62	9,40 (4,20 - 10,60)	4,59 A			2.050 (860 - 2.930)	1.025	9,60
5 + 12 + 15 + 15	1,00	2,00	2,50	2,50	8,00 (3,00 - 9,20)	4,17 A			1.920 (570 - 2.720)	960	9,10	0,70 + 1,30 + 1,50 + 1,50	1,17	2,35	2,94	2,94	9,40 (4,20 - 10,60)	4,65 A			2.020 (770 - 2.960)	1.010	9,50
5 + 15 + 15 + 15	0,95	2,35	2,35	2,35	8,00 (3,00 - 9,20)	4,17 A			1.920 (570 - 2.720)	960	9,10	0,70 + 1,50 + 1,50 + 1,50	1,12	2,76	2,76	2,76	9,40 (4,20 - 10,60)	4,68 A			2.010 (770 - 2.950)	1.005	9,40
7 + 7 + 7 + 7	2,00	2,00	2,00	2,00	8,00 (3,00 - 9,20)		6,80 A+³	8,00	1.980 (530 - 2.870)	412	9,40	1,30 + 1,30 + 1,30 + 1,30	2,35	2,35	2,35	2,35	9,40 (4,20 - 10,60)		4,20 A+³	8,00	2.080 (700 - 3.060)	2.667	9,80
7 + 7 + 7 + 9¹	1,88	1,88	1,88	2,36	8,00 (3,00 - 9,20)	4,04 A			1.980 (530 - 2.870)	990	9,40	1,20 + 1,20 + 1,20 + 1,50	2,21	2,21	2,21	2,77	9,40 (4,20 - 10,60)	4,52 A			2.080 (700 - 3.060)	1.040	9,80
7 + 7 + 7 + 9²	1,82	1,82	1,82	2,54	8,00 (3,00 - 9,20)	4,04 A			1.980 (530 - 2.870)	990	9,40	1,20 + 1,20 + 1,20 + 1,60	2,14	2,14	2,14	2,98	9,40 (4,20 - 10,60)	4,52 A			2.080 (700 - 3.060)	1.040	9,80
7 + 7 + 7 + 12	1,74	1,74	1,74	2,78	8,00 (3,00 - 9,20)	4,17 A			1.920 (570 - 2.800)	960	9,10	1,10 + 1,10 + 1,10 + 1,60	2,04	2,04	2,04	3,28	9,40 (4,20 - 10,60)	4,56 A			2.060 (730 - 3.030)	1.030	9,70
7 + 7 + 7 + 15	1,60	1,60	1,60	3,20	8,00 (3,00 - 9,20)	4,17 A			1.920 (570 - 2.800)	960	9,10	1,00 + 1,00 + 1,00 + 1,80	1,88	1,88	1,88	3,76	9,40 (4,20 - 10,60)	4,56 A			2.060 (730 - 3.020)	1.030	9,70
7 + 7 + 7 + 18	1,45	1,45	1,45	3,65	8,00 (3,00 - 9,20)	4,28 A			1.870 (620 - 2.650)	935	8,90	0,90 + 0,90 + 0,90 + 2,10	1,71	1,71	1,71	4,27	9,40 (4,20 - 10,60)	4,63 A			2.030 (810 - 2.960)	1.015	9,50
7 + 7 + 7 + 21	1,33	1,33	1,33	4,01	8,00 (3,00 - 9,20)	4,28 A			1.870 (620 - 2.650)	935	8,90	0,80 + 0,80 + 0,80 + 2,30	1,57	1,57	1,57	4,69	9,40 (4,20 - 10,60)	4,63 A			2.030 (810 - 2.960)	1.015	9,50
7 + 7 + 7 + 24	1,23	1,23	1,23	4,31	8,00 (3,00 - 9,20)	4,28 A			1.870 (630 - 2.660)	935	8,90	0,80 + 0,80 + 0,80 + 2,40	1,45	1,45	1,45	5,05	9,40 (4,20 - 10,60)	4,65 A			2.020 (820 - 2.950)	1.010	9,50
7 + 7 + 9¹ + 9¹	1,78	1,78	2,22	2,22	8,00 (3,00 - 9,20)	4,04 A			1.980 (530 - 2.870)	990	9,40	1,10 + 1,10 + 1,40 + 1,40	2,09	2,09	2,61	2,61	9,40 (4,20 - 10,60)	4,52 A			2.080 (700 - 3.060)	1.040	9,80
7 + 7 + 9¹ + 9²	1,72	1,72	2,15	2,41	8,00 (3,00 - 9,20)	4,04 A			1.980 (530 - 2.870)	990	9,40	1,10 + 1,10 + 1,40 + 1,50	2,02	2,02	2,53	2,83	9,40 (4,20 - 10,60)	4,52 A			2.080 (700 - 3.060)	1.040	9,80
7 + 7 + 9¹ + 12	1,65	1,65	2,06	2,64	8,00 (3,00 - 9,20)	4,17 A			1.920 (570 - 2.800)	960	9,10	1,10 + 1,10 + 1,30 + 1,60	1,94	1,94	2,42	3,10	9,40 (4,20 - 10,60)	4,56 A			2.060 (730 - 3.030)	1.030	9,70
7 + 7 + 9¹ + 15	1,52	1,52	1,90	3,06	8,00 (3,00 - 9,20)	4,17 A			1.920 (570 - 2.800)	960	9,10	1,00 + 1,00 + 1,20 + 1,70	1,79	1,79	2,24	3,58	9,40 (4,20 - 10,60)	4,56 A			2.060 (730 - 3.020)	1.030	9,70
7 + 7 + 9¹ + 18	1,39	1,39	1,74	3,48	8,00 (3,00 - 9,20)	4,28 A			1.870 (620 - 2.650)	935	8,90	0,90 + 0,90 + 1,10 + 2,00	1,63	1,63	2,04	4,10	9,40 (4,20 - 10,60)	4,63 A			2.030 (810 - 2.960)	1.015	9,50
7 + 7 + 9¹ + 21	1,28	1,28	1,60	3,84	8,00 (3,00 - 9,20)	4,28 A			1.870 (620 - 2.650)	935	8,90	0,80 + 0,80 + 1,00 + 2,20	1,50	1,50	1,88	4,52	9,40 (4,20 - 10,60)	4,63 A			2.030 (810 - 2.960)	1.015	9,50
7 + 7 + 9¹ + 24	1,19	1,19	1,47	4,15	8,00 (3,00 - 9,20)	4,28 A			1.870 (630 - 2.660)	935	8,90	0,70 + 0,70 + 0,90 + 2,40	1,39	1,39	1,74	4,88	9,40 (4,20 - 10,60)	4,65 A			2.020 (820 - 2.950)	1.010	9,50
7 + 7 + 9² + 9²	1,67	1,67	2,33	2,33	8,00 (3,00 - 9,20)	4,04 A			1.980 (530 - 2.870)	990	9,40	1,10 + 1,10 + 1,50 + 1,50	1,96	1,96	2,74	2,74	9,40 (4,20 - 10,60)	4,52 A			2.080 (700 - 3.060)	1.040	9,80
7 + 7 + 9² + 12	1,60	1,60	2,24	2,56	8,00 (3,00 - 9,20)	4,17 A			1.920 (570 - 2.800)	960	9,10	1,00 + 1,00 + 1,50 + 1,60	1,88	1,88	2,63	3,01	9,40 (4,20 - 10,60)	4,56 A			2.060 (730 - 3.030)	1.030	9,70
7 + 7 + 9² + 15	1,48	1,48	2,07	2,97	8,00 (3,00 - 9,20)	4,17 A			1.920 (570 - 2.800)	960	9,10	0,90 + 0,90 + 1,30 + 1,70	1,74	1,74	2,44	3,48	9,40 (4,20 - 10,60)	4,56 A			2.060 (730 - 3.020)	1.030	9,70
7 + 7 + 9² + 18	1,36	1,36	1,89	3,39	8,00 (3,00 - 9,20)	4,28 A			1.870 (620 - 2.650)	935	8,90	0,90 + 0,90 + 1,20 + 1,90	1,59	1,59	2,23	3,99	9,40 (4,20 - 10,60)	4,63 A			2.030 (810 - 2.960)	1.015	9,50
7 + 7 + 9² + 21	1,25	1,25	1,75	3,75	8,00 (3,00 - 9,20)	4,28 A			1.870 (620 - 2.650)	935	8,90	0,80 + 0,80 + 1,10 + 2,20	1,47	1,47	2,05	4,41	9,40 (4,20 - 10,60)	4,63 A			2.030 (810 - 2.960)	1.015	9,50
7 + 7 + 12 + 12	1,54	1,54	2,46	2,46	8,00 (3,00 - 9,20)	4,17 A			1.920 (570 - 2.800)	960	9,10	1,00 + 1,00 + 1,50 + 1,50	1,81	1,81	2,89	2,89	9,40 (4,20 - 10,60)	4,61 A			2.040 (740 - 3.000)	1.020	9,60
7 + 7 + 12 + 15	1,43	1,43	2,28	2,86	8,00 (3,00 - 9,20)	4,17 A			1.920 (570 - 2.800)	960	9,10	0,90 + 0,90 + 1,50 + 1,70	1,68	1,68	2,68	3,36	9,40 (4,20 - 10,60)	4,61 A			2.040 (740 - 2.990)	1.020	9,60
7 + 7 + 12 + 18	1,31	1,31	2,10	3,28	8,00 (3,00 - 9,20)	4,28 A			1.870 (630 - 2.660)	935	8,90	0,80 + 0,80 + 1,40 + 1,90	1,54	1,54	2,47	3,85	9,40 (4,20 - 10,60)	4,65 A			2.020 (830 - 2.940)	1.010	9,50
7 + 7 + 12 + 21	1,21	1,21	1,94	3,64	8,00 (3,00 - 9,20)	4,28 A			1.870 (630 - 2.660)	935	8,90	0,80 + 0,80 + 1,30 + 2,10	1,42	1,42	2,28	4,28	9,40 (4,20 - 10,60)	4,65 A			2.020 (830 - 2.940)	1.010	9,50
7 + 7 + 15 + 15	1,33	1,33	2,67	2,67	8,00 (3,00 - 9,20)	4,17 A			1.920 (570 - 2.800)	960	9,10	0,80 + 0,80 + 1,60 + 1,60	1,57	1,57	3,13	3,13	9,40 (4,20 - 10,60)	4,63 A			2.030 (740 - 2.980)	1.015	9,50
7 + 7 + 15 + 18	1,23	1,23	2,46	3,08	8,00 (3,00 - 9,20)	4,28 A			1.870 (630 - 2.660)	935	8,90	0,80 + 0,80 + 1,50 + 1,70	1,45	1,45	2,88	3,62	9,40 (4,20 - 10,60)	4,59 A			2.050 (830 - 2.930)	1.025	9,60
7 + 9¹ + 9¹ + 9¹	1,67	2,11	2,11	2,11	8,00 (3,00 - 9,20)	4,04 A			1.980 (530 - 2.870)	990	9,40	1,10 + 1,40 + 1,40 + 1,40	1,99	2,47	2,47	2,47	9,40 (4,20 - 10,60)	4,52 A			2.080 (700 - 3.060)	1.040	9,80
7 + 9¹ + 9¹ + 9²	1,63	2,04	2,04	2,29	8,00 (3,00 - 9,20)	4,04 A			1.980 (530 - 2.870)	990	9,40	1,00 + 1,30 + 1,30 + 1,50	1,91	2,40	2,40	2,69	9,40 (4,20 - 10,60)	4,52 A			2.080 (700 - 3.060)	1.040	9,80
7 + 9¹ + 9¹ + 12	1,57	1,96	1,96	2,51	8,00 (3,00 - 9,20)	4,17 A			1.920 (570 - 2.800)	960	9,10	1,00 + 1,30 + 1,30 + 1,50	1,84	2,30	2,30	2,96	9,40 (4,20 - 10,60)	4,56 A			2.060 (730 - 3.030)	1.030	9,70
7 + 9¹ + 9¹ + 15	1,45	1,82	1,82	2,91	8,00 (3,00 - 9,20)	4,17 A			1.920 (570 - 2.800)	960	9,10	0,90 + 1,20 + 1,20 + 1,70	1,70	2,14	2,14	3,42	9,40 (4,20 - 10,60)	4,56 A			2.060 (730 - 3.020)	1.030	9,70
7 + 9¹ + 9¹ + 18	1,33	1,67	1,67	3,33	8,00 (3,00 - 9,20)	4,28 A			1.870 (620 - 2.650)	935	8,90	0,80 + 1,10 + 1,10 + 1,90	1,56	1,96	1,96	3,92	9,40 (4,20 - 10,60)	4,63 A			2.030 (810 - 2.960)	1.015	9,50
7 + 9¹ + 9¹ + 21	1,23	1,54	1,54	3,69	8,00 (3,00 - 9,20)	4,28 A			1.870 (620 - 2.650)	935	8,90	0,80 + 1,00 + 1,00 + 2,10	1,44	1,81	1,81	4,34	9,40 (4,20 - 10,60)	4,63 A			2.030 (810 - 2.960)	1.015	9,50
7 + 9¹ + 9² + 9²	1,58	1,98	2,22	2,22	8,00 (3,00 - 9,20)	4,04 A			1.980 (530 - 2.870)	990	9,40	1,00 + 1,30 + 1,40 + 1,40	1,85	2,33	2,61	2,61	9,40 (4,20 - 10,60)	4,52 A			2.080 (700 - 3.060)	1.040	9,80
7 + 9¹ + 9² + 12	1,52	1,90	2,13	2,45	8,00 (3,00 - 9,20)	4,17 A			1.920 (570 - 2.800)	960	9,10	1,00 + 1,20 + 1,40 + 1,50	1,79	2,24	2,51	2,86	9,40 (4,20 - 10,60)	4,56 A			2.060 (730 - 3.030)	1.030	9,70
7 + 9¹ + 9² + 15	1,42	1,77	1,98	2,83	8,00 (3,00 - 9,20)	4,17 A			1.920 (570 - 2.800)	960	9,10	0,90 + 1,10 + 1,30 + 1,70	1,66	2,08	2,33	3,33	9,40 (4,20 - 10,60)	4,56 A			2.060 (730 - 3.020)	1.030	9,70
7 + 9¹ + 9² + 18	1,30	1,63	1,82	3,25	8,00 (3,00 - 9,20)	4,28 A			1.870 (620 - 2.650)	935	8,90	0,80 + 1,00 + 1,20 + 1,80	1,53	1,91	2,14	3,82	9,40 (4,20 - 10,60)	4,63 A			2.030 (810 - 2.960)	1.015	9,50
7 + 9¹ + 9² + 21	1,20	1,50	1,68	3,62	8,00 (3,00 - 9,20)	4,28 A			1.870 (620 - 2.650)	935	8,90	0,70 + 1,00 + 1,10 + 2,10	1,41	1,77	1,98	4,24	9,40 (4,20 - 10,60)	4,63 A			2.030 (810 - 2.960)	1.015	9,50
7 + 9¹ + 12 + 12	1,47	1,83	2,35	2,35	8,00 (3,00 - 9,20)	4,17 A			1.920 (570 - 2.800)	960	9,10	0,90 + 1,20 + 1,50 + 1,72	1,72	2,16	2,76	2,76	9,40 (4,20 - 10,60)	4,61 A			2.040 (740 - 3.000)	1.020	9,60
7 + 9¹ + 12 + 15	1,36	1,71	2,19	2,74	8,00 (3,00 - 9,20)	4,17 A			1.920 (570 - 2.800)	960	9,10	0,90 + 1,10 + 1,40 + 1,60	1,61	2,01	2,57	3,21	9,40 (4,20 - 10,60)	4,61 A			2.040 (740 - 2.990)	1.020	9,60
7 + 9¹ + 12 + 18	1,26	1,57	2,02	3,15	8,00 (3,00 - 9,20)	4,28 A			1.870 (630 - 2.660)	935	8,90	0,80 + 1,00 + 1,30 + 1,80	1,48	1,85	2,37	3,70	9,40 (4,20 - 10,60)	4,65 A			2.020 (830 - 2.940)	1.010	9,50
7 + 9¹ + 15 + 15	1,28	1,60	2,56	2,56	8,00 (3,00 - 9,20)	4,17 A			1.920 (570 - 2.800)	960	9,10	0,80 + 1,00 + 1,60 + 1,60	1,50	1,88	3,01	3,01	9,40 (4,20 - 10,60)	4,63 A			2.030 (740 - 2.980)	1.015	9,50
7 + 9¹ + 15 + 18	1,19	1,48	2,37	2,96	8,00 (3,00 - 9,20)	4,28 A			1.870 (630 - 2.660)	935	8,90	0,70 + 0,90 + 1,50 + 1,70	1,39	1,74	2,79	3,48	9,40 (4,20 - 10,60)	4,59 A			2.050 (830 - 2.930)	1.025	9,60
7 + 9² + 9² + 9²	1,55	2,15	2,15	2,15	8,00 (3,00 - 9,20)	4,04 A			1.980 (530 - 2.870)	990	9,40	1,00 + 1,40 + 1,40 + 1,40	1,81	2,53	2,53	2,53	9,40 (4,20 - 10,60)	4,52 A			2.080 (700 - 3.060)	1.040	9,80
7 + 9² + 9² + 12	1,48	2,07	2,07	2,38	8,00 (3,00 - 9,20)	4,17 A			1.920 (570 - 2.800)	960	9,10	0,90 + 1,30 + 1,30 + 1,50	1,73	2,44	2,44	2,79	9,40 (4,20 - 10,60)	4,56 A			2.060 (730 - 3.030)	1.030	9,70
7 + 9² + 9² + 15	1,38	1,93	1,93	2,76	8,00 (3,00 - 9,20)	4,17 A			1.920 (570 - 2.800)	960	9,10	0,90 + 1,20 + 1,20 + 1,60	1,62	2,27	2,27	3,24	9,40 (4,20 - 10,60)	4,56 A			2.060 (730 - 3.020)	1.030	9,70
7 + 9² + 9² + 18	1,27	1,78	1,78	3,17	8,00 (3,00 - 9,20)	4,28 A			1.870 (620 - 2.650)	935	8,90	0,80 + 1,10 + 1,10 + 1,80	1,49	2,09	2,09	3,73	9,40 (4,20 - 10,60)	4,63 A			2.030 (810 - 2.960)	1.015	9,50
7 + 9² + 9² + 21	1,17	1,65	1,65	3,53	8,00 (3,00 - 9,20)	4,28 A			1.870 (620 - 2.650)	935	8,90	0,70 + 1,10 + 1,10 + 2,00	1,37	1,94	1,94	4,15	9,40 (4,20 - 10,60)	4,63 A			2.030 (810 - 2.960)	1.015	9,50
7 + 9² + 12 + 12	1,42	2,00	2,29	2,29	8,00 (3,00 - 9,20)	4,17 A			1.920 (570 - 2.800)	960	9,10	0,90 + 1,30 + 1,50 + 1,50	1,67	2,35	2,69	2,69	9,40 (4,20 - 10,60)	4,61 A			2.040 (740 - 3.000)	1.020	9,60
7 + 9² + 12 + 15	1,33	1,87	2,13	2,67	8,00 (3,00 - 9,20)	4,17 A			1.920 (570 - 2.800)	960	9,10	0,80 + 1,20 + 1,40 + 1,60	1,57	2,19	2,51	3,13	9,40 (4,20 - 10,60)	4,61 A			2.040 (740 - 2.990)	1.020	9,60
7 + 9² + 12 + 18	1,23	1,72	1,97	3,08	8,00 (3,00 - 9,20)	4,28 A			1.870 (630 - 2.660)	935	8,90	0,80 + 1,10 + 1,30 + 1,70	1,45	2,02	2,31	3,62	9,40 (4,20 - 10,60)	4,65 A			2.020 (830 - 2.940)	1.010	9,50
7 + 9² + 15 + 15	1,25	1,75	2,50	2,50	8,00 (3,00 - 9,20)	4,17 A			1.920 (570 - 2.800)	960	9,10	0,80 + 1,10 + 1,50 + 1,50	1,46	2,06	2,94	2,94	9,40 (4,20 - 10,60)	4,63 A			2.030 (740 - 2.980)	1.015	9,50
7 + 12 + 12 + 12	1,37	2,21	2,21	2,21	8,00 (3,00 - 9,20)	4,17 A			1.920 (570 - 2.720)	960	9,10	0,90 + 1,40 + 1,40 + 1,40	1,63	2,59	2,59	2,59	9,40 (4,20 - 10,60)	4,63 A			2.030 (770 - 2.970)	1.015	9,50
7 + 12 + 12 + 15	1,29	2,06	2,06	2,59	8,00 (3,00 - 9,20)	4,17 A			1.920 (570 - 2.720)	960	9,10	0,80 + 1,30 + 1,30 + 1,60	1,51	2,43	2,43	3,03	9,40 (4,20 - 10,60)	4,65 A			2.020 (770 - 2.960)	1.010	9,50
7 + 12 + 12 + 18	1,19	1,91	1,91	2,99	8,00 (3,00 - 9,20)	4,28 A			1.870 (630 - 2.660)	935	8,90	0,70 + 1,20 + 1,20 + 1,70	1,40	2,24	2,24	3,52	9,40 (4,20 - 10,60)	4,59 A			2.050 (860 - 2.920)	1.025	9,60
7 + 12 + 15 + 15	1,21	1,95	2,42	2,42	8,00 (3,00 - 9,20)	4,17 A			1.920 (570 - 2.720)	960	9,10	0,80 + 1,30 + 1,50 + 1,50	1,42	2,28	2,85	2,85	9,40 (4,20 - 10,60)	4,68 A			2.010 (770 - 2.950)	1.005	9,40
9¹ + 9¹ + 9¹ + 9¹	2,00	2,00	2,00	2,00	8,00 (3,00 - 9,20)	4,04 A			1.980 (530 - 2.870)	990	9,40	1,30 + 1,30 + 1,30 + 1,30	2,35	2,35	2,35	2,35	9,40 (4,20 - 10,60)	4,52 A			2.080 (700 - 3.060)	1.040	9,80
9¹ + 9¹ + 9¹ + 9²	1,94	1,94	1,94	2,18	8,00 (3,00 - 9,20)	4,04 A			1.980 (530 - 2.870)	990	9,40	1,30 + 1,30 + 1,30 + 1,40	2,28	2,28	2,28	2,56	9,40 (4,20 - 10,60)	4,52 A			2.080 (700 - 3.060)	1.040	9,80
9¹ + 9¹ + 9¹ + 12	1,87	1,87	1,87	2,39	8,00 (3,00 - 9,20)	4,17 A			1.920 (570 - 2.800)	960	9,10	1,20 + 1,20 + 1,20 + 1,50	2,20	2,20	2,20	2,80	9,40 (4,20 - 10,60)	4,56 A			2.060 (730 - 3.030)	1.030	9,70
9¹ + 9¹ + 9¹ + 15	1,74	1,74	1,74	2,78	8,00 (3,00 - 9,20)	4,17 A			1.920 (570 - 2.800)	960	9,10	1,10 + 1,10 + 1,10 + 1,60	2,04	2,04	2,04	3,28	9,40 (4,20 - 10,60)	4,56 A			2.060 (730 - 3.020)	1.030	9,70
9¹ + 9¹ + 9¹ + 18	1,60	1,60	1,60	3,20	8,00 (3,00 - 9,20)	4,28 A			1.870 (620 - 2.650)	935	8,90	1,00 + 1,00 + 1,00 + 1,80	1,88	1,88	1,88	3,76	9,40 (4,20 - 10,60)	4,63 A			2.030 (810 - 2.960)	1.015	9,50
9¹ + 9¹ + 9¹ + 21	1,48	1,48	1,48	3,56	8,00 (3,00 - 9,20)	4,28 A			1.870 (620 - 2.650)	935	8,90	0,90 + 0,90 + 0,90 + 2,10	1,74	1,74	1,74	4,18	9,40 (4,20 - 10,60)	4,63 A			2.030 (810 - 2.960)	1.015	9,50
9¹ + 9¹ + 9² + 9²	1,89	1,89	2,11	2,11	8,00 (3,00 - 9,20)	4,04 A			1.980 (530 - 2.870)	990	9,40	1,20 + 1,20 + 1,40 + 1,40	2,22	2,22	2,48	2,48	9,40 (4,20 - 10,60)	4,52 A			2.080 (700 - 3.060)	1.040	9,80
9¹ + 9¹ + 9² + 12	1,82	1,82	2,03	2,33	8,00 (3,00 - 9,20)	4,17 A			1.920 (570 - 2.800)	960	9,10	1,20 + 1,20 + 1,30 + 1,50	2,14	2,14	2,39	2,73	9,40 (4,20 - 10,60)	4,56 A			2.060 (730 - 3.030)	1.030	9,70
9¹ + 9¹ + 9² + 15	1,69	1,69	1,90	2,72	8,00 (3,00 - 9,20)	4,17 A			1.920 (570 - 2.800)	960	9,10	1,10 + 1,10 + 1,20 + 1,60	1,99	1,99	2,23	3,19	9,40 (4,20 - 10,60)	4,56 A			2.060 (730 - 3.020)	1.030	9,70
9¹ + 9¹ + 9² + 18	1,56	1,56	1,75	3,13	8,00 (3,00 - 9,20)	4,28 A			1.870 (620 - 2.650)	935	8,90	1,00 + 1,00 + 1,10 + 1,80	1,84	1,84	2,05	3,67	9,40 (4,20 - 10,60)	4,63 A			2.030 (810 - 2.960)	1.015	9,50
9¹ + 9¹ + 12 + 12	1,75	1,75	2,25	2,25	8,00 (3,00 - 9,20)	4,17 A			1.920 (570 - 2.800)	960	9,10	1,10 + 1,10 + 1,50 + 1,50	2,06	2,06	2,64	2,64	9,40 (4,20 - 10,60)	4,61 A			2.040 (740 - 3.000)	1.020	9,60
9¹ + 9¹ + 12 + 15	1,64	1,64	2,10	2,62	8,00 (3,00 - 9,20)	4,17 A			1.920 (570 - 2.800)	960	9,10	1,00 + 1,00 + 1,40 + 1,60	1,93	1,93	2,46	3,08	9,40 (4,20 - 10,60)	4,61 A			2.040 (740 - 2.990)	1.020	9,60
9¹ + 9¹ + 12 + 18	1,52	1,52	1,93	3,03	8,00 (3,00 - 9,20)	4,28 A			1.870 (630 - 2.660)	935	8,90	1,00 + 1,00 + 1,20 + 1,70	1,78	1,78	2,28	3,56	9,40 (4,20 - 10,60)	4,65 A			2.020 (830 - 2.940)	1.010	9,50
9¹ + 9¹ + 15 + 15	1,54	1,54	2,46	2,46	8,00 (3,00 - 9,20)	4,17 A			1.920 (570 - 2.800)	960	9,10	1,00 + 1,00 + 1,50 + 1,50	1,81	1,81	2,89	2,89	9,40 (4,20 - 10,60)	4,63 A			2.030 (740 - 2.980)	1.015	9,50
9¹ + 9² + 9² + 9²	1,82	2,06	2,06	2,06	8,00 (3,00 - 9,20)	4,04 A			1.980 (530 - 2.870)	990	9,40	1,20 + 1,30 + 1,30 + 1,30	2,17	2,41	2,41	2,41	9,40 (4,20 - 10,60)	4,52 A			2.080 (700 - 3.060)	1.040	9,80
9¹ + 9² + 9² + 12	1,77	1,98	1,98	2,27	8,00 (3,00 - 9,20)	4,17 A			1.920 (570 - 2.800)	960	9,10	1,10 + 1,30 + 1,30 + 1,50	2,08	2,33	2,33	2,66	9,40 (4,20 - 10,60)	4,56 A			2.060 (730 - 3.030)	1.030	9,70
9¹ + 9² + 9² + 15	1,65	1,85	1,85	2,65	8,00 (3,00 - 9,20)	4,17 A			1.920 (570 - 2.800)	960	9,10	1,10 + 1,20 + 1,20 + 1,60	1,93	2,18	2,18	3,11	9,40 (4,20 - 10,60)	4,56 A			2.060 (730 - 3.020)	1.030	9,70
9¹ + 9² + 9² + 18	1,53	1,71	1,71	3,05	8,00 (3,00 - 9,20)	4,28 A			1.870 (620 - 2.650)	935	8,90	1,00 + 1,10 + 1,10 + 1,70	1,79	2,01	2,01	3,59	9,40 (4,20 - 10,60)	4,63 A			2.030 (810 - 2.960)	1.015	9,50
9¹ + 9² + 12 + 12	1,71	1,91	2,19	2,19	8,00 (3,00 - 9,20)	4,17 A			1.920 (570 - 2.800)	960	9,10	1,10 + 1,20 + 1,40 + 1,40	2,01	2,25

Free Multi combinations table

Free Multi 5x1 CU-5E34PBE. Minimum capacity connected: 4,5 kW. Maximum capacity connected: 17,5 kW

Indoor unit capacity	Cooling capacity (kW) Rooms						EER	SEER	Pdesign	Input power rating	A.E.C.	Current	Moisture removal	Heating capacity (kW) Rooms						COP	SCOP	Pdesign at -10°C	Input power rating	A.E.C.	Current
	A	B	C	D	E	Total (Min - Max)	W/W	W/W	kWh	W	kWh	230V (A)	Volume (l/h)	A	B	C	D	E	Total (Min - Max)	W/W	W/W	kWh	W	kWh	230V (A)
1 Room																									
5	1,60					1,60 (1,30 - 2,30)	4,00 A			400 (250 - 640)	200	2,00	1,00	2,60					2,60 (1,20 - 3,20)	4,33 A			600 (300 - 960)	300	3,00
7	2,00					2,00 (1,80 - 2,90)	4,00 A			500 (340 - 810)	250	2,50	1,30	3,20					3,20 (1,20 - 4,10)	4,32 A			740 (300 - 1.230)	370	3,70
9[1]	2,50					2,50 (1,80 - 2,90)	3,97 A			630 (340 - 810)	315	3,20	1,50	3,60					3,60 (1,20 - 4,30)	3,83 A			940 (300 - 1.230)	470	4,70
9[2]	2,80					2,80 (1,80 - 2,90)	4,00 A			700 (340 - 810)	350	3,50	1,60	4,00					4,00 (1,20 - 4,30)	3,81 A			1.050 (300 - 1.230)	525	5,20
12	3,20					3,20 (1,80 - 3,80)	4,00 A			800 (340 - 1.360)	400	3,90	1,80	4,50					4,50 (1,20 - 5,80)	3,66 A			1.230 (300 - 2.100)	615	6,00
15	4,00					4,00 (1,80 - 4,30)	3,23 A			1.240 (340 - 1.990)	620	5,80	2,30	5,60					5,60 (1,20 - 6,80)	3,26 C			1.720 (300 - 2.930)	860	8,00
18	5,00					5,00 (1,90 - 5,70)	3,23 A			1.550 (340 - 2.130)	775	7,20	2,70	6,80					6,80 (1,20 - 6,90)	3,24 C			2.100 (300 - 2.520)	1.050	9,70
21	6,00					6,00 (1,90 - 6,20)	2,96 C			2.030 (340 - 2.330)	1.015	9,20	3,30	8,50					8,50 (1,30 - 9,00)	3,54 B			2.400 (620 - 2.530)	1.200	11,10
24	7,00					7,00 (2,00 - 7,20)	2,81 C			2.490 (370 - 2.770)	1.245	11,30	4,00	8,70					8,70 (1,40 - 9,20)	3,41 B			2.550 (680 - 2.720)	1.275	11,80
2 Rooms																									
5 + 5	1,60	1,60				3,20 (2,40 - 5,80)	4,38 A			730 (300 - 1.920)	365	3,60	1,00 + 1,00	2,35	2,35				4,70 (2,00 - 8,20)	3,36 C			1.400 (260 - 2.780)	700	6,60
5 + 7	1,60	2,00				3,60 (2,40 - 5,80)	4,14 A			870 (300 - 1.920)	435	4,20	1,00 + 1,30	2,31	2,89				5,20 (2,00 - 8,20)	3,29 C			1.580 (250 - 2.770)	790	7,50
5 + 9[1]	1,60	2,50				4,10 (2,40 - 5,80)	3,83 A			1.070 (300 - 1.920)	535	5,00	1,00 + 1,50	2,19	3,41				5,60 (2,00 - 8,20)	3,24 C			1.730 (250 - 2.770)	865	8,20
5 + 9[2]	1,60	2,80				4,40 (2,40 - 5,80)	3,70 A			1.190 (300 - 1.920)	595	5,60	1,00 + 1,60	2,15	3,75				5,90 (2,00 - 8,20)	3,22 C			1.830 (250 - 2.770)	915	8,60
5 + 12	1,60	3,20				4,80 (2,40 - 5,80)	3,58 A			1.340 (300 - 1.860)	670	6,20	1,00 + 1,80	2,13	4,27				6,40 (2,00 - 8,20)	3,28 C			1.950 (240 - 2.690)	975	9,20
5 + 15	1,60	4,00				5,60 (2,40 - 5,80)	3,33 A			1.680 (300 - 1.800)	840	7,80	1,00 + 2,30	2,11	5,29				7,40 (2,00 - 8,60)	3,23 C			2.290 (240 - 2.800)	1.145	10,80
5 + 18	1,60	5,00				6,60 (2,40 - 7,20)	3,25 A			2.030 (280 - 2.360)	1.015	9,40	1,00 + 2,70	2,06	6,44				8,50 (2,00 - 11,00)	3,36 C			2.530 (190 - 3.510)	1.265	11,90
5 + 21	1,60	6,00				7,60 (2,40 - 8,60)	2,89 C			2.630 (280 - 3.410)	1.315	12,10	1,00 + 3,30	2,11	7,89				10,00 (2,00 - 11,00)	3,25 C			3.080 (190 - 3.510)	1.540	14,50
5 + 24	1,60	7,00				8,60 (2,50 - 9,10)	2,64 D			3.260 (310 - 3.490)	1.630	15,00	1,00 + 4,00	1,90	8,30				10,20 (2,00 - 13,00)	3,31 C			3.080 (190 - 4.420)	1.540	14,50
7 + 7	2,00	2,00				4,00 (2,40 - 5,80)	3,96 A			1.010 (300 - 1.860)	505	4,80	1,30 + 1,30	2,90	2,90				5,80 (2,00 - 8,20)	3,28 C			1.770 (250 - 2.760)	885	8,30
7 + 9[1]	2,00	2,50				4,50 (2,40 - 5,80)	3,63 A			1.240 (300 - 1.860)	620	5,80	1,30 + 1,50	2,71	3,39				6,10 (2,00 - 8,20)	3,26 C			1.870 (250 - 2.760)	935	8,80
7 + 9[2]	2,00	2,80				4,80 (2,40 - 5,80)	3,58 A			1.340 (300 - 1.860)	670	6,20	1,30 + 1,60	2,71	3,79				6,50 (2,00 - 8,20)	3,32 C			1.960 (250 - 2.760)	980	9,20
7 + 12	2,00	3,20				5,20 (2,40 - 5,80)	3,56 A			1.460 (300 - 1.800)	730	6,80	1,30 + 1,80	2,65	4,25				6,90 (2,00 - 8,60)	3,32 C			2.080 (240 - 2.800)	1.040	9,80
7 + 15	2,00	4,00				6,00 (2,40 - 6,70)	3,13 B			1.920 (300 - 2.360)	960	8,90	1,30 + 2,30	2,63	5,27				7,90 (2,00 - 10,10)	3,17 D			2.490 (230 - 3.490)	1.245	11,70
7 + 18	2,00	5,00				7,00 (2,40 - 8,10)	3,24 A			2.160 (280 - 2.890)	1.080	10,00	1,30 + 2,70	2,57	6,43				9,00 (2,00 - 11,00)	3,45 B			2.610 (190 - 3.440)	1.305	12,30
7 + 21	2,00	6,00				8,00 (2,40 - 8,60)	2,84 C			2.820 (280 - 3.330)	1.410	13,00	1,30 + 3,30	2,62	7,88				10,50 (2,00 - 11,90)	3,40 C			3.090 (190 - 3.840)	1.545	14,50
7 + 24	2,00	7,00				9,00 (2,50 - 10,00)	2,60 D			3.460 (310 - 4.460)	1.730	16,00	1,30 + 4,00	2,38	8,32				10,70 (2,00 - 13,00)	3,35 C			3.190 (190 - 4.410)	1.595	15,00
9[1] + 9[1]	2,50	2,50				5,00 (2,40 - 5,80)	3,55 A			1.410 (300 - 1.860)	705	6,60	1,50 + 1,50	3,25	3,25				6,50 (2,00 - 8,60)	3,32 C			1.960 (250 - 2.880)	980	9,20
9[1] + 9[2]	2,50	2,80				5,30 (2,40 - 5,80)	3,38 A			1.570 (300 - 1.860)	785	7,30	1,50 + 1,60	3,21	3,59				6,80 (2,00 - 8,60)	3,21 C			2.120 (250 - 2.880)	1.060	10,00
9[1] + 12	2,50	3,20				5,70 (2,40 - 6,70)	3,28 A			1.740 (300 - 2.360)	870	8,10	1,50 + 1,80	3,20	4,10				7,30 (2,00 - 10,10)	3,26 C			2.240 (240 - 3.490)	1.120	10,50
9[1] + 15	2,50	4,00				6,50 (2,40 - 7,20)	2,91 C			2.230 (300 - 2.760)	1.115	10,30	1,50 + 2,30	3,19	5,11				8,30 (2,00 - 11,00)	3,12 D			2.660 (230 - 3.720)	1.330	12,50
9[1] + 18	2,50	5,00				7,50 (2,40 - 8,60)	3,01 B			2.490 (280 - 3.330)	1.245	11,50	1,50 + 2,70	3,13	6,27				9,40 (2,00 - 11,00)	3,32 C			2.830 (190 - 3.440)	1.415	13,30
9[1] + 21	2,50	6,00				8,50 (2,50 - 9,10)	2,61 D			3.260 (310 - 3.640)	1.630	15,00	1,50 + 3,30	3,21	7,69				10,90 (2,00 - 13,00)	3,40 C			3.210 (190 - 4.420)	1.605	15,10
9[1] + 24	2,50	7,00				9,50 (2,50 - 10,10)	2,45 E			3.880 (310 - 4.620)	1.940	17,90	1,50 + 4,00	2,92	8,18				11,10 (2,00 - 13,00)	3,40 B			3.260 (190 - 4.410)	1.630	15,30
9[2] + 9[2]	2,80	2,80				5,60 (2,40 - 5,80)	3,22 A			1.740 (300 - 1.860)	870	8,10	1,60 + 1,60	3,60	3,60				7,20 (2,00 - 8,60)	3,17 D			2.270 (250 - 2.880)	1.135	10,70
9[2] + 12	2,80	3,20				6,00 (2,40 - 6,70)	3,13 B			1.920 (300 - 2.360)	960	8,90	1,60 + 1,80	3,59	4,11				7,70 (2,00 - 10,10)	3,21 C			2.400 (240 - 3.490)	1.200	11,30
9[2] + 15	2,80	4,00				6,80 (2,40 - 7,20)	2,81 C			2.420 (300 - 2.760)	1.210	11,20	1,60 + 2,30	3,54	5,06				8,60 (2,00 - 11,00)	3,20 D			2.690 (230 - 3.720)	1.345	12,60
9[2] + 18	2,80	5,00				7,80 (2,40 - 8,60)	2,91 C			2.680 (280 - 3.330)	1.340	12,40	1,60 + 2,70	3,48	6,22				9,70 (2,00 - 11,00)	3,29 C			2.950 (190 - 3.440)	1.475	13,90
9[2] + 21	2,80	6,00				8,80 (2,50 - 9,10)	2,55 E			3.450 (310 - 3.640)	1.725	15,90	1,60 + 3,30	3,60	7,70				11,30 (2,00 - 13,00)	3,46 B			3.270 (190 - 4.420)	1.635	15,40
9[2] + 24	2,80	7,00				9,80 (2,50 - 10,10)	2,37 F			4.140 (310 - 4.620)	2.070	19,10	1,60 + 4,00	3,26	8,14				11,40 (2,00 - 13,00)	3,44 B			3.310 (190 - 4.410)	1.655	15,60
12 + 12	3,20	3,20				6,40 (2,40 - 7,20)	3,05 B			2.100 (290 - 2.620)	1.050	9,70	1,80 + 1,80	4,05	4,05				8,10 (2,00 - 11,00)	3,20 C			2.530 (230 - 3.710)	1.265	11,90
12 + 15	3,20	4,00				7,20 (2,40 - 8,10)	2,75 D			2.620 (290 - 3.390)	1.310	12,10	1,80 + 2,30	4,04	5,06				9,10 (2,00 - 11,00)	3,16 D			2.880 (230 - 3.640)	1.440	13,50
12 + 18	3,20	5,00				8,20 (2,50 - 9,10)	2,84 C			2.890 (310 - 3.490)	1.445	13,30	1,80 + 2,70	3,98	6,22				10,20 (2,00 - 11,90)	3,41 B			2.990 (180 - 3.750)	1.495	14,10
12 + 21	3,20	6,00				9,20 (2,50 - 10,00)	2,58 E			3.570 (310 - 4.460)	1.785	16,50	1,80 + 3,30	4,07	7,63				11,70 (2,00 - 13,00)	3,43 B			3.410 (180 - 4.390)	1.705	16,00
12 + 24	3,14	6,86				10,00 (2,50 - 10,40)		5,60 A+++	10,00	4.220 (310 - 4.800)	625	19,50	1,80 + 3,90	3,76	8,24				12,00 (2,00 - 13,80)		3,80 A	10,00	3.510 (180 - 4.780)	3.684	16,50
15 + 15	4,00	4,00				8,00 (2,50 - 8,60)	2,47 E			3.240 (320 - 3.930)	1.620	14,90	2,30 + 2,30	5,05	5,05				10,10 (2,00 - 11,90)	3,14 D			3.220 (220 - 4.040)	1.610	15,10
15 + 18	4,00	5,00				9,00 (2,50 - 10,00)	2,60 D			3.460 (310 - 4.460)	1.730	16,00	2,30 + 2,70	4,98	6,22				11,20 (2,00 - 13,00)	3,59 B			3.120 (180 - 4.310)	1.560	14,70
15 + 21	4,00	6,00				10,00 (2,50 - 10,40)		5,60 A+++	10,00	4.460 (310 - 4.790)	625	20,60	2,30 + 3,30	4,80	7,20				12,00 (2,00 - 13,80)		3,80 A	10,00	3.510 (180 - 4.790)	3.684	16,50
15 + 24	3,64	6,36				10,00 (2,50 - 10,40)	2,41 E			4.150 (310 - 4.800)	2.075	19,10	2,10 + 3,60	4,36	7,64				12,00 (2,00 - 13,80)	3,44 B			3.490 (180 - 4.770)	1.745	16,40
18 + 18	5,00	5,00				10,00 (2,50 - 10,40)		5,60 A+++	10,00	3.610 (300 - 4.000)	625	16,60	2,70 + 2,70	6,00	6,00				12,00 (2,00 - 13,80)		3,80 A	10,00	3.260 (200 - 4.500)	3.684	15,30
18 + 21	4,55	5,45				10,00 (2,50 - 10,40)	2,77 D			3.610 (300 - 4.000)	1.805	16,60	2,50 + 2,90	5,45	6,55				12,00 (2,00 - 13,80)	3,68 A			3.260 (200 - 4.500)	1.630	15,30
18 + 24	4,17	5,83				10,00 (2,50 - 10,40)	2,88 C			3.470 (300 - 3.850)	1.735	16,00	2,40 + 3,20	5,00	7,00				12,00 (2,00 - 13,80)	3,70 A			3.240 (200 - 4.480)	1.620	15,20
21 + 21	5,00	5,00				10,00 (2,50 - 10,40)	2,77 D			3.610 (300 - 4.000)	1.805	16,60	2,70 + 2,70	6,00	6,00				12,00 (2,00 - 13,80)	3,68 A			3.260 (200 - 4.500)	1.630	15,30
21 + 24	4,62	5,38				10,00 (2,50 - 10,40)	2,88 C			3.470 (300 - 3.850)	1.735	16,00	2,50 + 2,90	5,54	6,46				12,00 (2,00 - 13,80)	3,70 A			3.240 (200 - 4.480)	1.620	15,20
24 + 24	5,00	5,00				10,00 (2,50 - 10,40)	3,01 B			3.320 (330 - 3.690)	1.660	15,30	2,70 + 2,70	6,00	6,00				12,00 (2,00 - 13,80)	3,72 A			3.230 (200 - 4.460)	1.615	15,20
3 Rooms																									
5 + 5 + 5	1,60	1,60	1,60			4,80 (2,90 - 8,50)	4,36 A			1.100 (360 - 2.890)	550	5,20	1,00 + 1,00 + 1,00	2,33	2,33	2,33			6,99 (2,70 - 12,30)	3,95 A			1.770 (270 - 3.900)	885	8,30
5 + 5 + 7	1,60	1,60	2,00			5,20 (2,90 - 8,50)	4,26 A			1.220 (360 - 2.890)	610	5,70	1,00 + 1,00 + 1,30	2,34	2,34	2,92			7,60 (2,70 - 12,30)	3,78 A			2.010 (270 - 3.890)	1.005	9,40
5 + 5 + 9[1]	1,60	1,60	2,50			5,70 (2,90 - 8,50)	3,99 A			1.430 (360 - 2.890)	715	6,70	1,00 + 1,00 + 1,50	2,22	2,22	3,46			7,90 (2,70 - 12,30)	3,73 A			2.120 (270 - 3.890)	1.060	10,00
5 + 5 + 9[2]	1,60	1,60	2,80			6,00 (2,90 - 8,50)	3,90 A			1.540 (360 - 2.890)	770	7,20	1,00 + 1,00 + 1,60	2,21	2,21	3,88			8,30 (2,70 - 12,30)	3,66 A			2.270 (270 - 3.890)	1.135	10,70
5 + 5 + 12	1,60	1,60	3,20			6,40 (2,90 - 8,50)	3,72 A			1.720 (360 - 2.820)	860	8,00	1,00 + 1,00 + 1,80	2,18	2,18	4,34			8,70 (2,70 - 12,30)	3,73 A			2.330 (270 - 3.790)	1.165	10,90
5 + 5 + 15	1,60	1,60	4,00			7,20 (2,90 - 8,50)	3,55 A			2.030 (390 - 2.750)	1.015	9,40	1,00 + 1,00 + 2,30	2,16	2,16	5,38			9,70 (2,70 - 12,30)	3,51 B			2.760 (270 - 3.780)	1.380	13,00
5 + 5 + 18	1,60	1,60	5,00			8,20 (2,90 - 8,70)	3,50 A			2.340 (390 - 2.530)	1.170	10,80	1,00 + 1,00 + 2,70	2,11	2,11	6,58			10,80 (2,70 - 12,90)	3,96 A			2.730 (290 - 3.870)	1.365	12,80
5 + 5 + 21	1,60	1,60	6,00			9,20 (2,90 - 10,10)	3,38 A			2.720 (390 - 3.320)	1.360	12,50	1,00 + 1,00 + 3,30	2,09	2,09	7,82			12,00 (2,70 - 13,60)	3,77 A			3.180 (290 - 4.270)	1.590	14,90
5 + 5 + 24	1,57	1,57	6,86			10,00 (2,90 - 10,70)	3,22 A			3.110 (390 - 3.700)	1.555	14,30	1,00 + 1,00 + 3,90	1,88	1,88	8,24			12,00 (2,70 - 13,60)	3,80 A			3.160 (290 - 4.180)	1.580	14,80
5 + 7 + 7	1,60	2,00	2,00			5,60 (2,90 - 8,50)	4,06 A			1.380 (360 - 2.820)	690	6,40	1,00 + 1,30 + 1,30	2,32	2,89	2,89			8,10 (2,70 - 12,30)	3,75 A			2.160 (270 - 3.880)	1.080	10,20
5 + 7 + 9[1]	1,60	2,00	2,50			6,10 (2,90 - 8,50)	3,81 A			1.600 (360 - 2.820)	800	7,50	1,00 + 1,30 + 1,50	2,23	2,79	3,48			8,50 (2,70 - 12,30)	3,59 B			2.370 (270 - 3.880)	1.185	11,10
5 + 7 + 9[2]	1,60	2,00	2,80			6,40 (2,90 - 8,50)	3,72 A			1.720 (360 - 2.820)	860	8,00	1,00 + 1,30 + 1,60	2,20	2,75	3,85			8,80 (2,70 - 12,30)	3,67 A			2.400 (270 - 3.880)	1.200	11,30
5 + 7 + 12	1,60	2,00	3,20			6,80 (2,90 - 8,50)	3,70 A			1.840 (390 - 2.750)	920	8,50	1,00 + 1,30 + 1,80	2,18	2,74	4,38			9,30 (2,70 - 12,30)	3,68 A			2.530 (270 - 3.780)	1.265	11,90
5 + 7 + 15	1,60	2,00	4,00			7,60 (2,90 - 8,50)	3,42 A			2.220 (390 - 2.750)	1.110	10,20	1,00 + 1,30 + 2,30	2,17	2,71	5,42			10,30 (2,70 - 12,30)	3,69 A			2.790 (270 - 3.760)	1.395	13,10
5 + 7 + 18	1,60	2,00	5,00			8,60 (2,90 - 9,60)	3,39 A			2.540 (390 - 2.900)	1.270	11,70	1,00 + 1,30 + 2,70	2,10	2,63	6,57			11,30 (2,70 - 13,60)	3,98 A			2.840 (290 - 4.190)	1.420	13,30
5 + 7 + 21	1,60	2,00	6,00			9,60 (2,90 - 10,10)	3,31 A			2.900 (390 - 3.250)	1.450	13,40	1,00 + 1,30 + 3,30	2,00	2,50	7,50			12,00 (2,70 - 13,60)	3,80 A			3.160 (290 - 4.190)	1.580	14,80
5 + 7 + 24	1,51	1,89	6,60			10,00 (2,90 - 10,70)	3,22 A			3.110 (390 - 3.700)	1.555	14,30	1,00 + 1,20 + 3,70	1,81	2,26	7,93			12,00 (2,70 - 13,80)	3,81 A			3.150 (290 - 4.300)	1.575	14,80
5 + 9[1] + 9[1]	1,60	2,50	2,50			6,60 (2,90 - 8,50)	3,59 A			1.840 (360 - 2.820)	920	8,50	1,00 + 1,50 + 1,50	2,14	3,33	3,33			8,80 (2,70 - 12,30)	3,67 A			2.400 (270 - 3.880)	1.200	11,30
5 + 9[1] + 9[2]	1,60	2,50	2,80			6,90 (2,90 - 8,50)	3,61 A			1.910 (360 - 2.820)	955	8,80	1,00 + 1,50 + 1,60	2,13	3,33	3,74			9,20 (2,70 - 12,30)	3,58 B			2.570 (270 - 3.880)	1.285	12,10
5 + 9[1] + 12	1,60	2,50	3,20			7,30 (2,90 - 8,50)	3,49 A			2.090 (390 - 2.750)	1.045	9,60	1,00 + 1,50 + 1,80	2,10	3,29	4,21			9,60 (2,70 - 12,30)	3,56 B			2.700 (270 - 3.780)	1.350	12,70
5 + 9[1] + 15	1,60	2,50	4,00			8,10 (2,90 - 8,70)	3,27 A			2.480 (390 - 2.810)	1.240	11,40	1,00 + 1,50 + 2,30	2,09	3,27	5,24			10,60 (2,70 - 12,90)	3,59 B			2.950 (270 - 4.080)	1.475	13,90
5 + 9[1] + 18	1,60	2,50	5,00			9,10 (2,90 - 10,10)	3,43 A			2.650 (390 - 3.250)	1.325	12,20	1,00 + 1,50 + 2,70	2,06	3,21	6,43			11,70 (2,70 - 13,60)	3,90 A			3.000 (290 - 4.190)	1.500	14,10
5 + 9[1] + 21	1,58	2,48	5,94			10,00 (2,90 - 10,70)	3,14 B			3.180 (390 - 3.850)	1.590	14,70	1,00 + 1,50 + 3,30	1,90	2,97	7,13			12,00 (2,70 - 13,60)	3,80 A			3.160 (290 - 4.190)	1.580	14,80
5 + 9[1] + 24	1,44	2,25	6,31			10,00 (2,90 - 10,70)	3,22 A			3.110 (390 - 3.700)	1.555	14,30	0,90 + 1,50 + 3,50	1,73	2,70	7,57			12,00 (2,70 - 13,80)	3,81 A			3.150 (290 - 4.300)	1.575	14,80
5 + 9[2] + 9[2]	1,60	2,80	2,80			7,20 (2,90 - 8,50)	3,44 A			2.090 (360 - 2.820)	1.045	9,60	1,00 + 1,60 + 1,60	2,12	3,69	3,69			9,50 (2,70 - 12,30)	3,54 B			2.680 (270 - 3.880)	1.340	12,60
5 + 9[2] + 12	1,60	2,80	3,20			7,60 (2,90 - 8,50)	3,33 A			2.280 (390 - 2.750)	1.140	10,50	1,00 + 1,60 + 1,80	2,11	3,68	4,21			10,00 (2,70 - 12,30)	3,48 B			2.870 (270 - 3.780)	1.435	13,50
5 + 9[2] + 15	1,60	2,80	4,00			8,40 (2,90 - 8,70)	3,13 B			2.680 (390 - 2.810)	1.340	12,40	1,00 + 1,60 + 2,30	2,09	3,67	5,24			11,00 (2,70 - 12,90)	3,64 A			3.020 (270 - 4.080)	1.510	14,20
5 + 9[2] + 18	1,60	2,80	5,00			9,40 (2,90 - 10,10)	3,30 A			2.850 (390 - 3.250)	1.425	13,10	1,00 + 1,60 + 2,70	2,04	3,57	6,39			12,00 (2,70 - 13,60)	3,80 A			3.160 (290 - 4.190)	1.580	14,80
5 + 9[2] + 21	1,54	2,69	5,77			10,00 (2,90 - 10,70)	3,14 B			3.180 (390 - 3.850)	1.590	14,70	1,00 + 1,60 + 3,20	1,85	3,23	6,92			12,00 (2,70 - 13,60)	3,80 A			3.160 (290 - 4.190)	1.580	14,80
5 + 9[2] + 24	1,40	2,46	6,14			10,00 (2,90 - 10,70)	3,22 A			3.110 (390 - 3.700)	1.555	14,30	0,90 + 1,50 + 3,40	1,68	2,95	7,37			12,00 (2,70 - 13,80)	3,81 A			3.150 (290 - 4.300)	1.575	14,80
5 + 12 + 12	1,60	3,20	3,20			8,00 (2,90 - 8,50)	3,42 A			2.340 (390 - 2.680)	1.170	10,80	1,00 + 1,80 + 1,80	2,08	4,16	4,16			10,40 (2,70 - 12,90)	3,69 A			2.820 (260 - 4.060)	1.410	13,30
5 + 12 + 15	1,60	3,20	4,00			8,80 (2,90 - 9,60)	3,13 B			2.810 (390 - 3.250)	1.405	13,00	1,00 + 1,80 + 2,30	2,07	4,15	5,18			11,40 (2,70 - 13,60)	3,74 A			3.050 (280 - 4.450)	1.525	14,30
5 + 12 + 18	1,60	3,20	5,00			9,80 (2,90 - 10,70)	3,30 A			2.970 (390 - 3.700)	1.485	13,70	1,00 + 1,80 + 2,70	1,96	3,92	6,12			12,00 (2,70 - 13,60)	3,91 A			3.070 (290 - 4.150)	1.535	14,40
5 + 12 + 21	1,48	2,96	5,56			10,00 (2,90 - 10,70)	3,22 A			3.110 (390 - 3.700)	1.555	14,30	0,90 + 1,70 + 3,00	1,77	3,56	6,67			12,00 (2,70 - 13,80)	3,91 A			3.070 (290 - 4.280)	1.535	14,40
5 + 12 + 24	1,36	2,71	5,93			10,00 (2,90 - 10,70)	3,29 A			3.040 (390 - 3.540)	1.520	14,00	0,90 + 1,60 + 3,30	1,63	3,25	7,12			12,00 (2,70 - 13,80)	3,92 A			3.060 (310 - 4.260)	1.530	14,40
5 + 15 + 15	1,60	4,00	4,00			9,60 (2,90 - 10,10)	3,02 B			3.180 (390 - 3.690)	1.590	14,70	1,00 + 2,30 + 2,30	2,00	5,00	5,00			12,00 (2,70 - 13,60)	3,68 A			3.260 (280 - 4.360)	1.630	15,30
5 + 15 + 18	1,51	3,77	4,72			10,00 (2,90 - 10,70)	3,22 A			3.110 (390 - 3.700)	1.555	14,30	1,00 + 2,20 + 2,50	1,81	4,53	5,66			12,00 (2,70 - 13,80)	3,92 A			3.060 (310 - 4.270)	1.530	14,40
5 + 15 + 21	1,38	3,45	5,17			10,00 (2,90 - 10,70)	3,22 A			3.110 (390 - 3.700)	1.555	14,30	0,90 + 2,00 + 2,90	1,65	4,14	6,21			12,00 (2,70 - 13,80)	3,92 A			3.060 (310 - 4.270)	1.530	14,40
5 + 15 + 24	1,27	3,17	5,56			10,00 (2,90 - 10,70)	3,29 A			3.040 (420 - 3.540)	1.520	14,00	0,80 + 1,80 + 3,00	1,52	3,81	6,67			12,00 (2,70 - 13,80)	3,93 A			3.050 (310 - 4.250)	1.525	14,30
5 + 18 + 18	1,38	4,31	4,31			10,00 (2,90 - 10,70)	3,53 A			2.830 (430 - 3.250)	1.415	13,10	0,90 + 2,40 + 2,40	1,66	5,17	5,17			12,00 (2,70 - 13,80)	4,10 A			2.930 (350 - 4.030)	1.465	13,80
5 + 18 + 21	1,27	3,97	4,76			10,00 (2,90 -

Free Multi 5x1 CU-5E34PBE. Minimum capacity connected: 4,5 kW. Maximum capacity connected: 17,5 kW

Indoor unit capacity	Cooling capacity (kW) Rooms						EER	SEER	Pdesign	Input power rating	A.E.C.	Current	Moisture removal	Heating capacity (kW) Rooms						COP	SCOP	Pdesign at -10°C	Input power rating	A.E.C.	Current
	A	B	C	D	E	Total (Min - Max)	W/W	W/W	kWh	W	kWh	230V (A)	Volume (l/h)	A	B	C	D	E	Total (Min - Max)	W/W	W/W	kWh	W	kWh	230V (A)
7 + 7 + 24	1,82	1,82	6,36			10,00 (2,90 - 10,70)	3,22 A			3.110 (390 - 3.620)	1.555	14,30	1,20 + 1,20 + 3,60	2,18	2,18	7,64			12,00 (2,70 - 13,80)	3,90 A			3.080 (290 - 4.290)	1.540	14,50
7 + 9[1] + 9[1]	2,00	2,50	2,50			7,00 (2,90 - 8,50)	3,55 A			1.970 (360 - 2.820)	985	9,10	1,30 + 1,50 + 1,50	2,68	3,36	3,36			9,40 (2,70 - 12,30)	3,60 A			2.610 (270 - 3.860)	1.305	12,30
7 + 9[1] + 9[2]	2,00	2,50	2,80			7,30 (2,90 - 8,50)	3,49 A			2.090 (360 - 2.820)	1.045	9,60	1,30 + 1,50 + 1,60	2,66	3,32	3,72			9,70 (2,70 - 12,30)	3,49 B			2.780 (270 - 3.860)	1.390	13,10
7 + 9[1] + 12	2,00	2,50	3,20			7,70 (2,90 - 8,50)	3,47 A			2.220 (390 - 2.750)	1.110	10,20	1,30 + 1,50 + 1,80	2,65	3,31	4,24			10,20 (2,70 - 12,90)	3,62 A			2.820 (270 - 4.080)	1.410	13,30
7 + 9[1] + 15	2,00	2,50	4,00			8,50 (2,90 - 9,60)	3,09 B			2.750 (390 - 3.320)	1.375	12,70	1,30 + 1,50 + 2,30	2,64	3,29	5,27			11,20 (2,70 - 13,60)	3,78 A			2.960 (260 - 4.470)	1.480	13,90
7 + 9[1] + 18	2,00	2,50	5,00			9,50 (2,90 - 10,10)	3,25 A			2.920 (390 - 3.250)	1.460	13,50	1,30 + 1,50 + 2,70	2,52	3,16	6,32			12,00 (2,70 - 13,60)	3,81 A			3.150 (290 - 4.170)	1.575	14,80
7 + 9[1] + 21	1,90	2,38	5,72			10,00 (2,90 - 10,70)		5,60 A+[3]	10,0	3.180 (390 - 3.770)	625	14,70	1,20 + 1,50 + 3,10	2,28	2,86	6,86			12,00 (2,70 - 13,80)		3,80 A[3]	10,0	3.150 (290 - 4.310)	3.684	14,80
7 + 9[1] + 24	1,74	2,17	6,09			10,00 (2,90 - 10,70)	3,22 A			3.110 (390 - 3.620)	1.555	14,30	1,10 + 1,40 + 3,40	2,09	2,61	7,30			12,00 (2,70 - 13,80)	3,90 A			3.080 (290 - 4.290)	1.540	14,50
7 + 9[2] + 9[2]	2,00	2,80	2,80			7,60 (2,90 - 8,50)	3,33 A			2.280 (360 - 2.820)	1.140	10,50	1,30 + 1,60 + 1,60	2,66	3,72	3,72			10,10 (2,70 - 12,30)	3,53 B			2.860 (270 - 3.860)	1.430	13,40
7 + 9[2] + 12	2,00	2,80	3,20			8,00 (2,90 - 8,50)	3,32 A			2.410 (390 - 2.750)	1.205	11,10	1,30 + 1,60 + 1,80	2,62	3,68	4,20			10,50 (2,70 - 12,90)	3,62 A			2.900 (270 - 4.080)	1.450	13,60
7 + 9[2] + 15	2,00	2,80	4,00			8,80 (2,90 - 9,60)	3,06 B			2.880 (390 - 3.320)	1.440	13,30	1,30 + 1,60 + 2,30	2,61	3,66	5,23			11,50 (2,70 - 13,60)	3,69 A			3.120 (260 - 4.470)	1.560	14,70
7 + 9[2] + 18	2,00	2,80	5,00			9,80 (2,90 - 10,70)		5,60 A+[3]	10,0	3.040 (390 - 3.770)	625	14,00	1,30 + 1,60 + 2,70	2,45	3,43	6,12			12,00 (2,70 - 13,60)		3,80 A[3]	10,0	3.150 (290 - 4.170)	3.684	14,80
7 + 9[2] + 21	1,85	2,59	5,56			10,00 (2,90 - 10,70)	3,14 B			3.180 (390 - 3.770)	1.590	14,70	1,20 + 1,60 + 3,00	2,22	3,11	6,67			12,00 (2,70 - 13,80)	3,81 A			3.150 (290 - 4.310)	1.575	14,80
7 + 9[2] + 24	1,69	2,37	5,94			10,00 (2,90 - 10,70)	3,22 A			3.110 (390 - 3.620)	1.555	14,30	1,10 + 1,50 + 3,30	2,03	2,85	7,12			12,00 (2,70 - 13,80)	3,90 A			3.080 (290 - 4.290)	1.540	14,50
7 + 12 + 12	2,00	3,20	3,20			8,40 (2,90 - 8,70)	3,22 A			2.610 (390 - 2.740)	1.305	12,00	1,30 + 1,80 + 1,80	2,62	4,19	4,19			11,00 (2,70 - 12,90)	3,75 A			2.930 (280 - 4.050)	1.465	13,80
7 + 12 + 15	2,00	3,20	4,00			9,20 (2,90 - 10,10)	3,08 B			2.990 (390 - 3.620)	1.495	13,80	1,30 + 1,80 + 2,30	2,61	4,17	5,22			12,00 (2,70 - 13,60)	3,68 A			3.260 (280 - 4.360)	1.630	15,30
7 + 12 + 18	1,96	3,14	4,90			10,00 (2,90 - 10,70)		5,60 A+[3]	10,0	3.110 (390 - 3.700)	625	14,30	1,30 + 1,80 + 2,70	2,35	3,76	5,89			12,00 (2,70 - 13,60)		3,80 A[3]	10,0	3.060 (310 - 4.130)	3.684	14,40
7 + 12 + 21	1,78	2,86	5,36			10,00 (2,90 - 10,70)	3,22 A			3.110 (390 - 3.700)	1.555	14,30	1,10 + 1,70 + 2,90	2,14	3,43	6,43			12,00 (2,70 - 13,80)	3,92 A			3.060 (310 - 4.270)	1.530	14,40
7 + 12 + 24	1,64	2,62	5,74			10,00 (2,90 - 10,70)	3,29 A			3.040 (420 - 3.540)	1.520	14,00	1,00 + 1,60 + 3,10	1,96	3,15	6,89			12,00 (2,70 - 13,80)	3,93 A			3.050 (310 - 4.250)	1.525	14,30
7 + 15 + 15	2,00	4,00	4,00			10,00 (2,90 - 10,70)		5,60 A+[3]	10,0	3.540 (390 - 4.320)	625	16,30	1,30 + 2,30 + 2,30	2,40	4,80	4,80			12,00 (2,70 - 13,60)		3,80 A[3]	10,0	3.250 (280 - 4.350)	3.684	15,30
7 + 15 + 18	1,81	3,64	4,55			10,00 (2,90 - 10,70)	3,22 A			3.110 (390 - 3.620)	1.555	14,30	1,20 + 2,10 + 2,50	2,18	4,36	5,46			12,00 (2,70 - 13,80)	3,93 A			3.050 (310 - 4.250)	1.525	14,30
7 + 15 + 21	1,67	3,33	5,00			10,00 (2,90 - 10,70)	3,22 A			3.110 (390 - 3.620)	1.555	14,30	1,10 + 1,90 + 2,70	2,00	4,00	6,00			12,00 (2,70 - 13,80)	3,93 A			3.050 (310 - 4.250)	1.525	14,30
7 + 15 + 24	1,54	3,08	5,38			10,00 (2,90 - 10,70)	3,37 A			2.970 (420 - 3.540)	1.485	13,70	1,00 + 1,70 + 2,90	1,85	3,69	6,46			12,00 (2,70 - 14,10)	3,96 A			3.030 (310 - 4.370)	1.515	14,20
7 + 18 + 18	1,66	4,17	4,17			10,00 (2,90 - 10,70)	3,53 A			2.830 (430 - 3.250)	1.415	13,10	1,10 + 2,40 + 2,40	2,00	5,00	5,00			12,00 (2,70 - 13,80)	4,11 A			2.920 (350 - 4.020)	1.460	13,70
7 + 18 + 21	1,53	3,85	4,62			10,00 (2,90 - 10,70)	3,53 A			2.830 (430 - 3.250)	1.415	13,10	1,00 + 2,30 + 2,50	1,84	4,62	5,54			12,00 (2,70 - 14,10)	4,11 A			2.920 (350 - 4.220)	1.460	13,70
7 + 18 + 24	1,43	3,57	5,00			10,00 (2,90 - 10,70)	3,62 A			2.760 (460 - 3.180)	1.380	12,70	0,90 + 2,10 + 2,70	1,71	4,29	6,00			12,00 (2,70 - 14,10)	4,12 A			2.910 (370 - 4.200)	1.455	13,70
7 + 21 + 21	1,42	4,29	4,29			10,00 (2,90 - 10,70)	3,53 A			2.830 (430 - 3.250)	1.415	13,10	0,90 + 2,40 + 2,40	1,72	5,14	5,14			12,00 (2,70 - 14,10)	4,11 A			2.920 (350 - 4.220)	1.460	13,70
7 + 21 + 24	1,33	4,00	4,67			10,00 (2,90 - 10,70)	3,62 A			2.760 (460 - 3.180)	1.380	12,70	0,80 + 2,30 + 2,50	1,60	4,80	5,60			12,00 (2,70 - 14,40)	4,12 A			2.910 (370 - 4.330)	1.455	13,70
7 + 24 + 24	1,24	4,38	4,38			10,00 (2,90 - 10,70)	3,72 A			2.690 (460 - 3.110)	1.345	12,40	0,80 + 2,40 + 2,40	1,50	5,25	5,25			12,00 (2,70 - 14,40)	4,07 A			2.950 (380 - 4.310)	1.475	13,90
9[1] + 9[1] + 9[1]	2,50	2,50	2,50			7,50 (2,90 - 8,50)	3,38 A			2.220 (360 - 2.820)	1.110	10,20	1,50 + 1,50 + 1,50	3,23	3,23	3,23			9,69 (2,70 - 12,30)	3,49 B			2.780 (270 - 3.860)	1.390	13,10
9[1] + 9[1] + 9[2]	2,50	2,50	2,80			7,80 (2,90 - 8,50)	3,32 A			2.350 (360 - 2.820)	1.175	10,80	1,50 + 1,50 + 1,60	3,24	3,24	3,62			10,10 (2,70 - 12,90)	3,53 B			2.860 (270 - 4.180)	1.430	13,40
9[1] + 9[1] + 12	2,50	2,50	3,20			8,20 (2,90 - 8,70)	3,22 A			2.550 (390 - 2.810)	1.275	11,80	1,50 + 1,50 + 1,80	3,20	3,20	4,10			10,50 (2,70 - 12,90)	3,62 A			2.900 (270 - 4.080)	1.450	13,60
9[1] + 9[1] + 15	2,50	2,50	4,00			9,00 (2,90 - 9,60)	2,98 C			3.020 (390 - 3.320)	1.510	13,90	1,50 + 1,50 + 2,30	3,19	3,19	5,12			11,50 (2,70 - 13,60)	3,69 A			3.120 (260 - 4.470)	1.560	14,70
9[1] + 9[1] + 18	2,50	2,50	5,00			10,00 (2,90 - 10,70)		5,60 A+[3]	10,00	3.180 (390 - 3.770)	625	14,70	1,50 + 1,50 + 2,70	3,00	3,00	6,00			12,00 (2,70 - 13,60)		3,80 A[3]	10,00	3.150 (290 - 4.170)	3.684	14,80
9[1] + 9[1] + 21	2,27	2,27	5,46			10,00 (2,90 - 10,70)	3,14 B			3.180 (390 - 3.770)	1.590	14,70	1,50 + 1,50 + 3,00	2,73	2,73	6,54			12,00 (2,70 - 13,80)	3,81 A			3.150 (290 - 4.310)	1.575	14,80
9[1] + 9[1] + 24	2,08	2,08	5,84			10,00 (2,90 - 10,70)	3,22 A			3.110 (390 - 3.620)	1.555	14,30	1,30 + 1,30 + 3,20	2,50	2,50	7,00			12,00 (2,70 - 13,80)	3,90 A			3.080 (290 - 4.290)	1.540	14,50
9[1] + 9[2] + 9[2]	2,50	2,80	2,80			8,10 (2,90 - 8,70)	3,18 B			2.550 (360 - 2.880)	1.275	11,80	1,50 + 1,60 + 1,60	3,20	3,60	3,60			10,40 (2,70 - 12,90)	3,61 A			2.880 (270 - 4.180)	1.440	13,50
9[1] + 9[2] + 12	2,50	2,80	3,20			8,50 (2,90 - 9,60)	3,09 B			2.750 (390 - 3.320)	1.375	12,70	1,50 + 1,60 + 1,80	3,21	3,59	4,10			10,90 (2,70 - 13,60)	3,67 A			2.970 (270 - 4.480)	1.485	14,00
9[1] + 9[2] + 15	2,50	2,80	4,00			9,30 (2,90 - 10,10)	2,96 C			3.140 (390 - 3.770)	1.570	14,50	1,50 + 1,60 + 2,30	3,20	3,58	5,12			11,90 (2,70 - 13,60)	3,62 A			3.290 (260 - 4.470)	1.645	15,50
9[1] + 9[2] + 18	2,43	2,72	4,85			10,00 (2,90 - 10,70)		5,60 A+[3]	10,00	3.180 (390 - 3.770)	625	14,70	1,50 + 1,60 + 2,60	2,91	3,26	5,83			12,00 (2,70 - 13,60)		3,80 A[3]	10,00	3.150 (290 - 4.170)	3.684	14,80
9[1] + 9[2] + 21	2,21	2,48	5,31			10,00 (2,90 - 10,70)	3,14 B			3.180 (390 - 3.770)	1.590	14,70	1,40 + 1,50 + 2,90	2,65	2,97	6,38			12,00 (2,70 - 13,80)	3,81 A			3.150 (290 - 4.310)	1.575	14,80
9[1] + 9[2] + 24	2,03	2,28	5,69			10,00 (2,90 - 10,70)	3,22 A			3.110 (390 - 3.620)	1.555	14,30	1,30 + 1,50 + 3,10	2,44	2,73	6,83			12,00 (2,70 - 13,80)	3,90 A			3.080 (290 - 4.290)	1.540	14,50
9[1] + 12 + 12	2,50	3,20	3,20			8,90 (2,90 - 9,60)	3,09 B			2.880 (390 - 3.250)	1.440	13,30	1,50 + 1,80 + 1,80	3,18	4,06	4,06			11,30 (2,70 - 13,60)	3,78 A			2.990 (280 - 4.450)	1.495	14,10
9[1] + 12 + 15	2,50	3,20	4,00			9,70 (2,90 - 10,70)	2,98 C			3.250 (390 - 4.320)	1.625	15,00	1,50 + 1,80 + 2,30	3,09	3,96	4,95			12,00 (2,70 - 13,60)	3,68 A			3.260 (280 - 4.360)	1.630	15,30
9[1] + 12 + 18	2,34	2,99	4,67			10,00 (2,90 - 10,70)	3,22 A			3.110 (390 - 3.700)	1.555	14,30	1,50 + 1,70 + 2,50	2,80	3,59	5,61			12,00 (2,70 - 13,80)	3,92 A			3.060 (310 - 4.270)	1.530	14,40
9[1] + 12 + 21	2,13	2,74	5,13			10,00 (2,90 - 10,70)	3,22 A			3.110 (390 - 3.700)	1.555	14,30	1,40 + 1,60 + 2,80	2,56	3,28	6,16			12,00 (2,70 - 13,80)	3,92 A			3.060 (310 - 4.270)	1.530	14,40
9[1] + 12 + 24	1,97	2,52	5,51			10,00 (2,90 - 10,70)	3,29 A			3.040 (420 - 3.540)	1.520	14,00	1,30 + 1,50 + 3,00	2,36	3,02	6,62			12,00 (2,70 - 14,10)	3,93 A			3.050 (310 - 4.380)	1.525	14,30
9[1] + 15 + 15	2,38	3,81	3,81			10,00 (2,90 - 10,70)		5,60 A+[3]	10,00	3.540 (390 - 4.320)	625	16,30	1,50 + 2,20 + 2,20	2,86	4,57	4,57			12,00 (2,70 - 13,80)		3,80 A[3]	10,00	3.250 (280 - 4.490)	3.684	15,30
9[1] + 15 + 18	2,17	3,48	4,35			10,00 (2,90 - 10,70)	3,22 A			3.110 (390 - 3.620)	1.555	14,30	1,40 + 2,00 + 2,40	2,61	4,17	5,22			12,00 (2,70 - 13,80)	3,93 A			3.050 (310 - 4.250)	1.525	14,30
9[1] + 15 + 21	2,00	3,20	4,80			10,00 (2,90 - 10,70)	3,22 A			3.110 (390 - 3.620)	1.555	14,30	1,30 + 1,80 + 2,60	2,40	3,84	5,76			12,00 (2,70 - 13,80)	3,93 A			3.050 (310 - 4.250)	1.525	14,30
9[1] + 15 + 24	1,85	2,96	5,19			10,00 (2,90 - 10,70)	3,37 A			2.970 (420 - 3.540)	1.485	13,70	1,20 + 1,70 + 2,90	2,22	3,56	6,22			12,00 (2,70 - 14,10)	3,96 A			3.030 (310 - 4.370)	1.515	14,20
9[1] + 18 + 18	2,00	4,00	4,00			10,00 (2,90 - 10,70)	3,53 A			2.830 (430 - 3.250)	1.415	13,10	1,30 + 2,30 + 2,30	2,40	4,80	4,80			12,00 (2,70 - 13,80)	4,11 A			2.920 (350 - 4.020)	1.460	13,70
9[1] + 18 + 21	1,85	3,70	4,45			10,00 (2,90 - 10,70)	3,53 A			2.830 (430 - 3.250)	1.415	13,10	1,20 + 2,20 + 2,50	2,22	4,44	5,34			12,00 (2,70 - 14,10)	4,11 A			2.920 (350 - 4.220)	1.460	13,70
9[1] + 18 + 24	1,72	3,45	4,83			10,00 (2,90 - 10,70)	3,62 A			2.760 (460 - 3.180)	1.380	12,70	1,10 + 2,00 + 2,60	2,07	4,14	5,79			12,00 (2,70 - 14,10)	4,12 A			2.910 (370 - 4.200)	1.455	13,70
9[1] + 21 + 21	1,72	4,14	4,14			10,00 (2,90 - 10,70)	3,53 A			2.830 (430 - 3.250)	1.415	13,10	1,10 + 2,40 + 2,40	2,06	4,97	4,97			12,00 (2,70 - 14,10)	4,11 A			2.920 (350 - 4.220)	1.460	13,70
9[1] + 21 + 24	1,61	3,87	4,52			10,00 (2,90 - 10,70)	3,62 A			2.760 (460 - 3.180)	1.380	12,70	1,00 + 2,30 + 2,50	1,93	4,65	5,42			12,00 (2,70 - 14,40)	4,12 A			2.910 (370 - 4.330)	1.455	13,70
9[1] + 24 + 24	1,52	4,24	4,24			10,00 (2,90 - 10,70)	3,72 A			2.690 (460 - 3.110)	1.345	12,40	1,00 + 2,40 + 2,40	1,82	5,09	5,09			12,00 (2,70 - 14,40)	4,07 A			2.950 (380 - 4.310)	1.475	13,90
9[2] + 9[2] + 9[2]	2,80	2,80	2,80			8,40 (2,90 - 8,70)	3,05 B			2.750 (360 - 2.880)	1.375	12,70	1,60 + 1,60 + 1,60	3,60	3,60	3,60			10,80 (2,70 - 12,90)	3,67 A			2.940 (270 - 4.180)	1.470	13,80
9[2] + 9[2] + 12	2,80	2,80	3,20			8,80 (2,90 - 9,60)	3,06 B			2.880 (390 - 3.320)	1.440	13,30	1,60 + 1,60 + 1,80	3,60	3,60	4,10			11,30 (2,70 - 13,60)	3,74 A			3.020 (270 - 4.480)	1.510	14,20
9[2] + 9[2] + 15	2,80	2,80	4,00			9,60 (2,90 - 10,10)	2,89 C			3.320 (390 - 3.770)	1.660	15,30	1,60 + 1,60 + 2,30	3,50	3,50	5,00			12,00 (2,70 - 13,60)	3,58 B			3.350 (260 - 4.470)	1.675	15,70
9[2] + 9[2] + 18	2,64	2,64	4,72			10,00 (2,90 - 10,70)	3,14 B			3.180 (390 - 3.770)	1.590	14,70	1,60 + 1,60 + 2,50	3,17	3,17	5,66			12,00 (2,70 - 13,80)	3,81 A			3.150 (290 - 4.310)	1.575	14,80
9[2] + 9[2] + 21	2,41	2,41	5,18			10,00 (2,90 - 10,70)	3,14 B			3.180 (390 - 3.770)	1.590	14,70	1,50 + 1,50 + 2,90	2,90	2,90	6,20			12,00 (2,70 - 13,80)	3,81 A			3.150 (290 - 4.310)	1.575	14,80
9[2] + 9[2] + 24	2,22	2,22	5,56			10,00 (2,90 - 10,70)	3,22 A			3.110 (390 - 3.620)	1.555	14,30	1,40 + 1,40 + 3,00	2,67	2,67	6,66			12,00 (2,70 - 13,80)	3,90 A			3.080 (290 - 4.290)	1.540	14,50
9[2] + 12 + 12	2,80	3,20	3,20			9,20 (2,90 - 10,10)	3,08 B			2.990 (390 - 3.690)	1.495	13,80	1,60 + 1,80 + 1,80	3,56	4,07	4,07			11,70 (2,70 - 13,60)	3,70 A			3.160 (280 - 4.450)	1.580	14,80
9[2] + 12 + 15	2,80	3,20	4,00			10,00 (2,90 - 10,70)		5,60 A+[3]	10,00	3.540 (390 - 4.320)	625	16,30	1,60 + 1,80 + 2,30	3,36	3,84	4,80			12,00 (2,70 - 13,60)		3,80 A[3]	10,00	3.260 (280 - 4.360)	3.684	15,30
9[2] + 12 + 18	2,54	2,91	4,55			10,00 (2,90 - 10,70)	3,22 A			3.110 (390 - 3.700)	1.555	14,30	1,60 + 1,70 + 2,50	3,05	3,49	5,46			12,00 (2,70 - 13,80)	3,92 A			3.060 (310 - 4.270)	1.530	14,40
9[2] + 12 + 21	2,33	2,67	5,00			10,00 (2,90 - 10,70)	3,22 A			3.110 (390 - 3.700)	1.555	14,30	1,50 + 1,60 + 2,70	2,80	3,20	6,00			12,00 (2,70 - 13,80)	3,92 A			3.060 (310 - 4.270)	1.530	14,40
9[2] + 12 + 24	2,15	2,46	5,39			10,00 (2,90 - 10,70)	3,29 A			3.040 (420 - 3.540)	1.520	14,00	1,40 + 1,50 + 2,90	2,58	2,95	6,47			12,00 (2,70 - 14,10)	3,93 A			3.050 (310 - 4.380)	1.525	14,30
9[2] + 15 + 15	2,60	3,70	3,70			10,00 (2,90 - 10,70)	2,82 C			3.540 (390 - 4.320)	1.770	16,30	1,60 + 2,20 + 2,20	3,12	4,44	4,44			12,00 (2,70 - 13,80)	3,69 A			3.250 (280 - 4.490)	1.625	15,30
9[2] + 15 + 18	2,37	3,39	4,24			10,00 (2,90 - 10,70)	3,22 A			3.110 (390 - 3.620)	1.555	14,30	1,50 + 1,90 + 2,40	2,85	4,07	5,08			12,00 (2,70 - 13,80)	3,93 A			3.050 (310 - 4.250)	1.525	14,30
9[2] + 15 + 21	2,18	3,13	4,69			10,00 (2,90 - 10,70)	3,22 A			3.110 (390 - 3.620)	1.555	14,30	1,40 + 1,80 + 2,50	2,62	3,75	5,63			12,00 (2,70 - 14,10)	3,93 A			3.050 (310 - 4.390)	1.525	14,30
9[2] + 15 + 24	2,03	2,90	5,07			10,00 (2,90 - 10,70)	3,37 A			2.970 (420 - 3.540)	1.485	13,70	1,30 + 1,70 + 2,80	2,43	3,48	6,09			12,00 (2,70 - 14,10)	3,96 A			3.030 (310 - 4.370)	1.515	14,20
9[2] + 18 + 18	2,18	3,91	3,91			10,00 (2,90 - 10,70)	3,53 A			2.830 (430 - 3.250)	1.415	13,10	1,40 + 2,30 + 2,30	2,62	4,69	4,69			12,00 (2,70 - 14,10)	4,11 A			2.920 (350 - 4.220)	1.460	13,70
9[2] + 18 + 21	2,03	3,62	4,35			10,00 (2,90 - 10,70)	3,53 A			2.830 (430 - 3.250)	1.415	13,10	1,30 + 2,10 + 2,40	2,43	4,35	5,22			12,00 (2,70 - 14,10)	4,11 A			2.920 (350 - 4.220)	1.460	13,70
9[2] + 18 + 24	1,89	3,38	4,73			10,00 (2,90 - 10,70)	3,62 A			2.760 (460 - 3.180)	1.380	12,70	1,20 + 1,90 + 2,60	2,27	4,05	5,68			12,00 (2,70 - 14,10)	4,12 A			2.910 (370 - 4.200)	1.455	13,70
9[2] + 21 + 21	1,90	4,05	4,05			10,00 (2,90 - 10,70)	3,53 A			2.830 (430 - 3.250)	1.415	13,10	1,20 + 2,30 + 2,30	2,28	4,86	4,86			12,00 (2,70 - 14,10)	4,11 A			2.920 (350 - 4.220)	1.460	13,70
9[2] + 21 + 24	1,77	3,80	4,43			10,00 (2,90 - 10,70)	3,62 A			2.760 (460 - 3.180)	1.380	12,70	1,10 + 2,20 + 2,50	2,12	4,56	5,32			12,00 (2,70 - 14,40)	4,12 A			2.910 (370 - 4.330)	1.455	13,70
9[2] + 24 + 24	1,66	4,17	4,17			10,00 (2,90 - 10,70)	3,72 A			2.690 (460 - 3.110)	1.345	12,40	1,10 + 2,40 + 2,40	2,00	5,00	5,00			12,00 (2,70 - 14,40)	4,07 A			2.950 (380 - 4.310)	1.475	13,90
12 + 12 + 12	3,20	3,20	3,20			9,60 (2,90 - 10,10)	3,09 B			3.110 (390 - 3.540)	1.555	14,30	1,80 + 1,80 + 1,80	4,00	4,00	4,00			12,00 (2,70 - 13,60)	3,70 A			3.240 (280 - 4.340)	1.620	15,20
12 + 12 + 15	3,08	3,08	3,84			10,00 (2,90 - 10,70)		5,60 A+[3]	10,00	3.470 (390 - 4.160)	625	16,00	1,70 + 1,70 + 2,20	3,69	3,69	4,62			12,00 (2,70 - 13,60)		3,80 A[3]	10,00	3.220 (280 - 4.330)	3.684	15,10
12 + 12 + 18	2,81	2,81	4,38			10,00 (2,90 - 10,70)	3,29 A			3.040 (390 - 3.540)	1.520	14,00	1,60 + 1,60 + 2,40	3,37	3,37	5,26			12,00 (2,70 - 13,80)	3,96 A			3.030 (310 - 4.230)	1.515	14,20
12 + 12 + 21	2,58	2,58	4,84			10,00 (2,90 - 10,70)	3,29 A			3.040 (390 - 3.540)	1.520	14,00	1,60 + 1,60 + 2,60	3,10	3,10	5,80			12,00 (2,70 - 13,80)	3,96 A			3.030 (310 - 4.230)	1.515	14,20
12 + 12 + 24	2,39	2,39	5,22			10,00 (2,90 - 10,70)	3,37 A			2.970 (420 - 3.470)	1.485	13,70	1,50 + 1,50 + 2,90	2,87	2,87	6,26			12,00 (2,70 - 14,10)	3,97 A			3.020 (320 - 4.340)	1.510	14,20
12 + 15 + 15	2,86	3,57	3,57			10,00 (2,90 - 10,70)	2,95 C			3.390 (390 - 4.160)	1.695	15,60	1,70 + 2,10 + 2,10	3,42	4,29	4,29			12,00 (2,70 - 13,80)	3,74 A			3.210 (280 - 4.450)	1.605	15,10
12 + 15 + 18	2,62	3,28	4,10			10,00 (2,90 - 10,70)	3,29 A			3.040 (420 - 3.540)	1.520	14,00	1,60 + 1,90 + 2,30	3,15	3,93	4,92			12,00 (2,70 - 13,80)	3,97 A			3.020 (320 - 4.210)	1.510	14,20
12 + 15 + 21	2,42	3,03	4,55			10,00 (2,90 - 10,70)	3,29 A			3.040 (420 - 3.540)	1.520	14,00	1,50 + 1,70 + 2,50	2,91	3,64	5,45			12,00 (2,70 - 14,10)	3,97 A			3.020 (320 - 4.340)	1.510	14,20

Free Multi combinations table

Free Multi 5x1 CU-5E34PBE. Minimum capacity connected: 4,5 kW. Maximum capacity connected: 17,5 kW

Indoor unit capacity	Cooling capacity (kW) Rooms						EER	SEER	Pdesign	Input power rating	A.E.C.	Current	Moisture removal	Heating capacity (kW) Rooms						COP	SCOP	Pdesign at -10°C	Input power rating	A.E.C.	Current
	A	B	C	D	E	Total (Min - Max)	W/W	W/W	kWh	W	kWh	230V (A)	Volume (l/h)	A	B	C	D	E	Total (Min - Max)	W/W	W/W	kWh	W	kWh	230V (A)
4 Rooms																										
5 + 5 + 5 + 5	1,60	1,60	1,60	1,60		6,40 (2,90 - 10,60)	4,13 A			1.550 (420 - 3.850)	775	7,20	1,00 + 1,00 + 1,00 + 1,00	2,88	2,88	2,88	2,88		11,52 (3,40 - 14,20)	4,00 A			2.880 (390 - 4.440)	1.440	13,50
5 + 5 + 5 + 7	1,60	1,60	1,60	2,00		6,80 (2,90 - 10,60)	4,00 A			1.700 (420 - 3.850)	850	7,90	1,00 + 1,00 + 1,00 + 1,30	2,71	2,71	2,71	3,39		11,52 (3,40 - 14,20)	4,03 A			2.860 (390 - 4.420)	1.430	13,40
5 + 5 + 5 + 9[1]	1,60	1,60	1,60	2,50		7,30 (2,90 - 10,60)	3,86 A			1.890 (420 - 3.850)	945	8,70	1,00 + 1,00 + 1,00 + 1,50	2,52	2,52	2,52	3,96		11,52 (3,40 - 14,20)	4,03 A			2.860 (390 - 4.420)	1.430	13,40
5 + 5 + 5 + 9[2]	1,60	1,60	1,60	2,80		7,60 (2,90 - 10,60)	3,78 A			2.010 (420 - 3.850)	1.005	9,30	1,00 + 1,00 + 1,00 + 1,60	2,43	2,43	2,43	4,23		11,52 (3,40 - 14,20)	4,03 A			2.860 (390 - 4.420)	1.430	13,40
5 + 5 + 5 + 12	1,60	1,60	1,60	3,20		8,00 (2,90 - 10,60)	3,67 A			2.180 (420 - 3.770)	1.090	10,10	1,00 + 1,00 + 1,00 + 1,80	2,30	2,30	2,30	4,62		11,52 (3,40 - 14,20)	4,07 A			2.830 (390 - 4.380)	1.415	13,30
5 + 5 + 5 + 15	1,60	1,60	1,60	4,00		8,80 (2,90 - 10,60)	3,44 A			2.560 (420 - 3.770)	1.280	11,80	1,00 + 1,00 + 1,00 + 2,30	2,09	2,09	2,09	5,25		11,52 (3,40 - 14,20)	4,09 A			2.820 (400 - 4.370)	1.410	13,30
5 + 5 + 5 + 18	1,60	1,60	1,60	5,00		9,80 (2,90 - 10,60)	3,44 A			2.850 (470 - 3.440)	1.425	13,10	1,00 + 1,00 + 1,00 + 2,70	1,88	1,88	1,88	5,88		11,52 (3,40 - 14,20)	4,25 A			2.710 (460 - 4.200)	1.355	12,70
5 + 5 + 5 + 21	1,48	1,48	1,48	5,56		10,00 (2,90 - 10,60)	3,33 A			3.000 (470 - 3.440)	1.500	13,80	0,90 + 0,90 + 0,90 + 3,00	1,71	1,71	1,71	6,39		11,52 (3,40 - 14,20)	4,25 A			2.710 (460 - 4.200)	1.355	12,70
5 + 5 + 5 + 24	1,36	1,36	1,36	5,92		10,00 (2,90 - 10,60)	3,41 A			2.930 (470 - 3.360)	1.465	13,50	0,90 + 0,90 + 0,90 + 3,30	1,56	1,56	1,56	6,84		11,52 (3,40 - 14,20)	4,27 A			2.700 (460 - 4.180)	1.350	12,70
5 + 5 + 7 + 7	1,60	1,60	2,00	2,00		7,20 (2,90 - 10,60)	3,96 A			1.820 (420 - 3.760)	910	8,40	1,00 + 1,00 + 1,30 + 1,30	2,56	2,56	3,20	3,20		11,52 (3,40 - 14,20)	4,04 A			2.850 (390 - 4.410)	1.425	13,40
5 + 5 + 7 + 9[1]	1,60	1,60	2,00	2,50		7,70 (2,90 - 10,60)	3,76 A			2.050 (420 - 3.760)	1.025	9,50	1,00 + 1,00 + 1,30 + 1,50	2,39	2,39	2,99	3,75		11,52 (3,40 - 14,20)	4,04 A			2.850 (390 - 4.410)	1.425	13,40
5 + 5 + 7 + 9[2]	1,60	1,60	2,00	2,80		8,00 (2,90 - 10,60)	3,67 A			2.180 (420 - 3.760)	1.090	10,10	1,00 + 1,00 + 1,30 + 1,60	2,30	2,30	2,88	4,04		11,52 (3,40 - 14,20)	4,04 A			2.850 (390 - 4.410)	1.425	13,40
5 + 5 + 7 + 12	1,60	1,60	2,00	3,20		8,40 (2,90 - 10,60)	3,64 A			2.310 (420 - 3.680)	1.155	10,70	1,00 + 1,00 + 1,30 + 1,80	2,19	2,19	2,74	4,40		11,52 (3,40 - 14,20)	4,09 A			2.820 (400 - 4.370)	1.410	13,30
5 + 5 + 7 + 15	1,60	1,60	2,00	4,00		9,20 (2,90 - 10,60)	3,36 A			2.740 (420 - 3.680)	1.370	12,60	1,00 + 1,00 + 1,30 + 2,30	2,00	2,00	2,50	5,02		11,52 (3,40 - 14,20)	4,10 A			2.810 (400 - 4.350)	1.405	13,20
5 + 5 + 7 + 18	1,57	1,57	1,96	4,90		10,00 (2,90 - 10,60)	3,33 A			3.000 (470 - 3.440)	1.500	13,80	1,00 + 1,00 + 1,30 + 2,70	1,81	1,81	2,25	5,65		11,52 (3,40 - 14,20)	4,27 A			2.700 (460 - 4.190)	1.350	12,70
5 + 5 + 7 + 21	1,43	1,43	1,78	5,36		10,00 (2,90 - 10,60)	3,33 A			3.000 (470 - 3.440)	1.500	13,80	0,90 + 0,90 + 1,10 + 2,90	1,65	1,65	2,05	6,17		11,52 (3,40 - 14,20)	4,27 A			2.700 (460 - 4.190)	1.350	12,70
5 + 5 + 7 + 24	1,31	1,31	1,64	5,74		10,00 (2,90 - 10,80)	3,41 A			2.930 (470 - 3.520)	1.465	13,50	0,80 + 0,80 + 1,00 + 3,10	1,51	1,51	1,89	6,61		11,52 (3,40 - 14,20)	4,28 A			2.690 (460 - 4.170)	1.345	12,60
5 + 5 + 9[1] + 9[1]	1,60	1,60	2,50	2,50		8,20 (2,90 - 10,60)	3,64 A			2.250 (420 - 3.760)	1.125	10,40	1,00 + 1,00 + 1,50 + 1,50	2,25	2,25	3,51	3,51		11,52 (3,40 - 14,20)	4,04 A			2.850 (390 - 4.410)	1.425	13,40
5 + 5 + 9[1] + 9[2]	1,60	1,60	2,50	2,80		8,50 (2,90 - 10,60)	3,47 A			2.450 (420 - 3.760)	1.225	11,30	1,00 + 1,00 + 1,50 + 1,60	2,17	2,17	3,39	3,79		11,52 (3,40 - 14,20)	4,04 A			2.850 (390 - 4.410)	1.425	13,40
5 + 5 + 9[1] + 12	1,60	1,60	2,50	3,20		8,90 (2,90 - 10,60)	3,48 A			2.560 (420 - 3.680)	1.280	11,80	1,00 + 1,00 + 1,50 + 1,80	2,07	2,07	3,24	4,14		11,52 (3,40 - 14,20)	4,09 A			2.820 (400 - 4.370)	1.410	13,30
5 + 5 + 9[1] + 15	1,60	1,60	2,50	4,00		9,70 (2,90 - 10,60)	3,23 A			3.000 (420 - 3.680)	1.500	13,80	1,00 + 1,00 + 1,50 + 2,30	1,90	1,90	2,97	4,75		11,52 (3,40 - 14,20)	4,10 A			2.810 (400 - 4.350)	1.405	13,20
5 + 5 + 9[1] + 18	1,50	1,50	2,33	4,67		10,00 (2,90 - 10,60)	3,33 A			3.000 (470 - 3.440)	1.500	13,80	1,00 + 1,00 + 1,50 + 2,50	1,72	1,72	2,69	5,39		11,52 (3,40 - 14,20)	4,27 A			2.700 (460 - 4.190)	1.350	12,70
5 + 5 + 9[1] + 21	1,37	1,37	2,13	5,13		10,00 (2,90 - 10,60)	3,33 A			3.000 (470 - 3.440)	1.500	13,80	0,90 + 0,90 + 1,40 + 2,80	1,58	1,58	2,45	5,91		11,52 (3,40 - 14,20)	4,27 A			2.700 (460 - 4.190)	1.350	12,70
5 + 5 + 9[1] + 24	1,26	1,26	1,97	5,51		10,00 (2,90 - 10,80)	3,41 A			2.930 (470 - 3.520)	1.465	13,50	0,80 + 0,80 + 1,30 + 3,00	1,45	1,45	2,27	6,35		11,52 (3,40 - 14,20)	4,28 A			2.690 (460 - 4.170)	1.345	12,60
5 + 5 + 9[2] + 9[2]	1,60	1,60	2,80	2,80		8,80 (2,90 - 10,60)	3,44 A			2.560 (420 - 3.760)	1.280	11,80	1,00 + 1,00 + 1,60 + 1,60	2,09	2,09	3,67	3,67		11,52 (3,40 - 14,20)	4,04 A			2.850 (390 - 4.410)	1.425	13,40
5 + 5 + 9[2] + 12	1,60	1,60	2,80	3,20		9,20 (2,90 - 10,60)	3,36 A			2.740 (420 - 3.680)	1.370	12,60	1,00 + 1,00 + 1,60 + 1,80	2,00	2,00	3,51	4,01		11,52 (3,40 - 14,20)	4,09 A			2.820 (400 - 4.370)	1.410	13,30
5 + 5 + 9[2] + 15	1,60	1,60	2,80	4,00		10,00 (2,90 - 10,60)	3,17 B			3.150 (420 - 3.680)	1.575	14,50	1,00 + 1,00 + 1,60 + 2,30	1,84	1,84	3,23	4,61		11,52 (3,40 - 14,20)	4,10 A			2.810 (400 - 4.350)	1.405	13,20
5 + 5 + 9[2] + 18	1,45	1,45	2,55	4,55		10,00 (2,90 - 10,60)	3,33 A			3.000 (470 - 3.440)	1.500	13,80	0,90 + 0,90 + 1,60 + 2,50	1,68	1,68	2,92	5,24		11,52 (3,40 - 14,20)	4,27 A			2.700 (460 - 4.190)	1.350	12,70
5 + 5 + 9[2] + 21	1,33	1,33	2,33	5,01		10,00 (2,90 - 10,60)	3,33 A			3.000 (470 - 3.440)	1.500	13,80	0,80 + 0,80 + 1,50 + 2,70	1,54	1,54	2,68	5,76		11,52 (3,40 - 14,20)	4,27 A			2.700 (460 - 4.190)	1.350	12,70
5 + 5 + 9[2] + 24	1,23	1,23	2,15	5,39		10,00 (2,90 - 10,80)	3,41 A			2.930 (470 - 3.520)	1.465	13,50	0,80 + 0,80 + 1,40 + 2,90	1,42	1,42	2,48	6,20		11,52 (3,40 - 14,40)	4,28 A			2.690 (460 - 4.230)	1.345	12,60
5 + 5 + 12 + 12	1,60	1,60	3,20	3,20		9,60 (2,90 - 10,60)	3,37 A			2.850 (430 - 3.680)	1.425	13,10	1,00 + 1,00 + 1,80 + 1,80	1,92	1,92	3,84	3,84		11,52 (3,40 - 14,20)	4,11 A			2.800 (420 - 4.320)	1.400	13,20
5 + 5 + 12 + 15	1,54	1,54	3,07	3,85		10,00 (2,90 - 10,60)	3,17 B			3.150 (430 - 3.600)	1.575	14,50	1,00 + 1,00 + 1,70 + 2,30	1,77	1,77	3,54	4,44		11,52 (3,40 - 14,20)	4,13 A			2.790 (420 - 4.240)	1.395	13,10
5 + 5 + 12 + 18	1,40	1,40	2,81	4,39		10,00 (2,90 - 10,60)	3,41 A			2.930 (470 - 3.360)	1.465	13,50	0,90 + 0,90 + 1,60 + 2,40	1,62	1,62	3,23	5,05		11,52 (3,40 - 14,20)	4,30 A			2.680 (480 - 4.150)	1.340	12,60
5 + 5 + 12 + 21	1,29	1,29	2,58	4,84		10,00 (2,90 - 10,80)	3,41 A			2.930 (470 - 3.520)	1.465	13,50	0,80 + 0,80 + 1,60 + 2,60	1,49	1,49	2,97	5,57		11,52 (3,40 - 14,20)	4,30 A			2.680 (480 - 4.150)	1.340	12,60
5 + 5 + 12 + 24	1,19	1,19	2,39	5,23		10,00 (2,90 - 10,80)	3,41 A			2.930 (500 - 3.450)	1.465	13,50	0,70 + 0,70 + 1,50 + 2,90	1,38	1,38	2,74	6,02		11,52 (3,40 - 14,40)	4,24 A			2.720 (490 - 4.200)	1.360	12,80
5 + 5 + 15 + 15	1,43	1,43	3,57	3,57		10,00 (2,90 - 10,60)	3,17 B			3.150 (430 - 3.600)	1.575	14,50	0,90 + 0,90 + 2,10 + 2,10	1,65	1,65	4,11	4,11		11,52 (3,40 - 14,40)	4,14 A			2.780 (420 - 4.230)	1.390	13,10
5 + 5 + 15 + 18	1,31	1,31	3,28	4,10		10,00 (2,90 - 10,80)	3,41 A			2.930 (470 - 3.520)	1.465	13,50	0,80 + 0,80 + 1,90 + 2,30	1,51	1,51	3,78	4,72		11,52 (3,40 - 14,20)	4,24 A			2.720 (490 - 4.130)	1.360	12,80
5 + 5 + 15 + 21	1,21	1,21	3,03	4,55		10,00 (2,90 - 10,80)	3,41 A			2.930 (470 - 3.520)	1.465	13,50	0,80 + 0,80 + 1,70 + 2,50	1,40	1,40	3,48	5,24		11,52 (3,40 - 14,40)	4,24 A			2.720 (490 - 4.200)	1.360	12,80
5 + 5 + 15 + 24	1,13	1,13	2,81	4,93		10,00 (3,00 - 11,00)	3,41 A			2.930 (510 - 3.610)	1.465	13,50	0,70 + 0,70 + 1,60 + 2,70	1,30	1,30	3,24	5,68		11,52 (3,40 - 14,40)	4,25 A			2.710 (490 - 4.180)	1.355	12,70
5 + 5 + 18 + 18	1,21	1,21	3,79	3,79		10,00 (2,90 - 10,80)	3,57 A			2.800 (550 - 3.300)	1.400	12,90	0,80 + 0,80 + 2,20 + 2,20	1,40	1,40	4,36	4,36		11,52 (3,40 - 14,40)	4,30 A			2.680 (570 - 4.120)	1.340	12,60
5 + 5 + 18 + 21	1,13	1,13	3,51	4,23		10,00 (3,00 - 11,00)	3,57 A			2.800 (550 - 3.450)	1.400	12,90	0,70 + 0,70 + 2,00 + 2,40	1,30	1,30	4,05	4,87		11,52 (3,40 - 14,40)	4,30 A			2.680 (570 - 4.120)	1.340	12,60
5 + 5 + 18 + 24	1,05	1,05	3,29	4,61		10,00 (3,00 - 11,00)	3,57 A			2.800 (590 - 3.460)	1.400	12,90	0,70 + 0,70 + 1,90 + 2,50	1,21	1,21	3,79	5,31		11,52 (3,40 - 14,40)	4,30 A			2.680 (580 - 4.100)	1.340	12,60
5 + 5 + 21 + 21	1,05	1,05	3,95	3,95		10,00 (3,00 - 11,00)	3,57 A			2.800 (550 - 3.450)	1.400	12,90	0,70 + 0,70 + 2,30 + 2,30	1,21	1,21	4,55	4,55		11,52 (3,40 - 14,40)	4,30 A			2.680 (570 - 4.120)	1.340	12,60
5 + 5 + 21 + 24	0,99	0,99	3,70	4,32		10,00 (3,00 - 11,20)	3,57 A			2.800 (590 - 3.540)	1.400	12,90	0,70 + 0,70 + 2,20 + 2,40	1,14	1,14	4,26	4,98		11,52 (3,40 - 14,40)	4,30 A			2.680 (580 - 4.100)	1.340	12,60
5 + 5 + 24 + 24	0,93	0,93	4,07	4,07		10,00 (3,00 - 11,20)	3,57 A			2.800 (600 - 3.540)	1.400	12,90	0,70 + 0,70 + 2,30 + 2,30	1,07	1,07	4,69	4,69		11,52 (3,40 - 14,40)	4,31 A			2.670 (590 - 4.150)	1.335	12,50
5 + 7 + 7 + 7	1,60	2,00	2,00	2,00		7,60 (2,90 - 10,60)	3,78 A			2.010 (420 - 3.770)	1.005	9,30	1,00 + 1,30 + 1,30 + 1,30	2,43	3,03	3,03	3,03		11,52 (3,40 - 14,20)	4,06 A			2.840 (390 - 4.390)	1.420	13,30
5 + 7 + 7 + 9[1]	1,60	2,00	2,00	2,50		8,10 (2,90 - 10,60)	3,72 A			2.180 (420 - 3.770)	1.090	10,10	1,00 + 1,30 + 1,30 + 1,50	2,28	2,84	2,84	3,56		11,52 (3,40 - 14,20)	4,06 A			2.840 (390 - 4.390)	1.420	13,30
5 + 7 + 7 + 9[2]	1,60	2,00	2,00	2,80		8,40 (2,90 - 10,60)	3,53 A			2.380 (420 - 3.770)	1.190	11,00	1,00 + 1,30 + 1,30 + 1,60	2,19	2,74	2,74	3,85		11,52 (3,40 - 14,20)	4,06 A			2.840 (390 - 4.390)	1.420	13,30
5 + 7 + 7 + 12	1,60	2,00	2,00	3,20		8,80 (2,90 - 10,60)	3,53 A			2.490 (420 - 3.680)	1.245	11,50	1,00 + 1,30 + 1,30 + 1,80	2,09	2,62	2,62	4,19		11,52 (3,40 - 14,20)	4,10 A			2.810 (400 - 4.350)	1.405	13,20
5 + 7 + 7 + 15	1,60	2,00	2,00	4,00		9,60 (2,90 - 10,60)	3,29 A			2.920 (420 - 3.680)	1.460	13,50	1,00 + 1,30 + 1,30 + 2,30	1,92	2,40	2,40	4,80		11,52 (3,40 - 14,20)	4,11 A			2.800 (400 - 4.340)	1.400	13,20
5 + 7 + 7 + 18	1,50	1,89	1,89	4,72		10,00 (2,90 - 10,60)	3,41 A			2.930 (470 - 3.360)	1.465	13,50	1,00 + 1,20 + 1,20 + 2,50	1,74	2,17	2,17	5,44		11,52 (3,40 - 14,20)	4,28 A			2.690 (460 - 4.170)	1.345	12,60
5 + 7 + 7 + 21	1,38	1,72	1,72	5,18		10,00 (2,90 - 10,60)	3,41 A			2.930 (470 - 3.360)	1.465	13,50	0,90 + 1,10 + 1,10 + 2,90	1,59	1,99	1,99	5,95		11,52 (3,40 - 14,20)	4,28 A			2.690 (460 - 4.170)	1.345	12,60
5 + 7 + 7 + 24	1,26	1,59	1,59	5,56		10,00 (2,90 - 10,80)	3,41 A			2.930 (500 - 3.440)	1.465	13,50	0,80 + 1,00 + 1,00 + 3,00	1,46	1,83	1,83	6,40		11,52 (3,40 - 14,40)	4,30 A			2.680 (480 - 4.150)	1.340	12,60
5 + 7 + 9[1] + 9[1]	1,60	2,00	2,50	2,50		8,60 (2,90 - 10,60)	3,51 A			2.450 (420 - 3.770)	1.225	11,30	1,00 + 1,30 + 1,50 + 1,50	2,14	2,68	3,35	3,35		11,52 (3,40 - 14,20)	4,06 A			2.840 (390 - 4.390)	1.420	13,30
5 + 7 + 9[1] + 9[2]	1,60	2,00	2,50	2,80		8,90 (2,90 - 10,60)	3,38 A			2.630 (420 - 3.770)	1.315	12,10	1,00 + 1,30 + 1,50 + 1,60	2,07	2,59	3,24	3,62		11,52 (3,40 - 14,20)	4,06 A			2.840 (390 - 4.390)	1.420	13,30
5 + 7 + 9[1] + 12	1,60	2,00	2,50	3,20		9,30 (2,90 - 10,60)	3,39 A			2.740 (420 - 3.680)	1.370	12,60	1,00 + 1,30 + 1,50 + 1,80	1,98	2,48	3,10	3,96		11,52 (3,40 - 14,20)	4,10 A			2.810 (400 - 4.350)	1.405	13,20
5 + 7 + 9[1] + 15	1,58	1,98	2,48	3,96		10,00 (2,90 - 10,60)	3,17 B			3.150 (420 - 3.680)	1.575	14,50	1,00 + 1,30 + 1,50 + 2,30	1,82	2,28	2,85	4,57		11,52 (3,40 - 14,20)	4,11 A			2.800 (400 - 4.340)	1.400	13,20
5 + 7 + 9[1] + 18	1,44	1,80	2,25	4,51		10,00 (2,90 - 10,60)	3,41 A			2.930 (470 - 3.360)	1.465	13,50	0,90 + 1,20 + 1,50 + 2,50	1,66	2,08	2,59	5,19		11,52 (3,40 - 14,20)	4,28 A			2.690 (460 - 4.170)	1.345	12,60
5 + 7 + 9[1] + 21	1,32	1,65	2,07	4,96		10,00 (2,90 - 10,80)	3,41 A			2.930 (470 - 3.520)	1.465	13,50	0,80 + 1,10 + 1,30 + 2,70	1,52	1,90	2,38	5,72		11,52 (3,40 - 14,20)	4,28 A			2.690 (460 - 4.170)	1.345	12,60
5 + 7 + 9[1] + 24	1,22	1,53	1,91	5,34		10,00 (2,90 - 10,80)	3,41 A			2.930 (500 - 3.440)	1.465	13,50	0,80 + 1,00 + 1,20 + 2,90	1,40	1,76	2,20	6,16		11,52 (3,40 - 14,40)	4,30 A			2.680 (480 - 4.220)	1.340	12,60
5 + 7 + 9[2] + 9[2]	1,60	2,00	2,80	2,80		9,20 (2,90 - 10,60)	3,36 A			2.740 (420 - 3.770)	1.370	12,60	1,00 + 1,30 + 1,60 + 1,60	2,00	2,50	3,51	3,51		11,52 (3,40 - 14,20)	4,06 A			2.840 (390 - 4.390)	1.420	13,30
5 + 7 + 9[2] + 12	1,60	2,00	2,80	3,20		9,60 (2,90 - 10,60)	3,29 A			2.920 (420 - 3.680)	1.460	13,50	1,00 + 1,30 + 1,60 + 1,80	1,92	2,40	3,36	3,84		11,52 (3,40 - 14,20)	4,10 A			2.810 (400 - 4.350)	1.405	13,20
5 + 7 + 9[2] + 15	1,54	1,92	2,69	3,85		10,00 (2,90 - 10,60)	3,17 B			3.150 (420 - 3.680)	1.575	14,50	1,00 + 1,20 + 1,60 + 2,30	1,77	2,22	3,10	4,43		11,52 (3,40 - 14,20)	4,11 A			2.800 (400 - 4.340)	1.400	13,20
5 + 7 + 9[2] + 18	1,40	1,75	2,46	4,39		10,00 (2,90 - 10,60)	3,41 A			2.930 (470 - 3.360)	1.465	13,50	0,90 + 1,10 + 1,50 + 2,40	1,62	2,02	2,83	5,05		11,52 (3,40 - 14,20)	4,28 A			2.690 (460 - 4.170)	1.345	12,60
5 + 7 + 9[2] + 21	1,29	1,61	2,26	4,84		10,00 (2,90 - 10,80)	3,41 A			2.930 (470 - 3.520)	1.465	13,50	0,80 + 1,00 + 1,50 + 2,60	1,49	1,86	2,60	5,57		11,52 (3,40 - 14,20)	4,28 A			2.690 (460 - 4.170)	1.345	12,60
5 + 7 + 9[2] + 24	1,19	1,49	2,09	5,23		10,00 (2,90 - 10,80)	3,41 A			2.930 (500 - 3.440)	1.465	13,50	0,70 + 0,90 + 1,40 + 2,90	1,37	1,72	2,41	6,02		11,52 (3,40 - 14,40)	4,30 A			2.680 (480 - 4.220)	1.340	12,60
5 + 7 + 12 + 12	1,60	2,00	3,20	3,20		10,00 (2,90 - 10,60)	3,17 B			3.150 (430 - 3.600)	1.575	14,50	1,00 + 1,30 + 1,80 + 1,80	1,84	2,30	3,69	3,69		11,52 (3,40 - 14,20)	4,13 A			2.790 (420 - 4.240)	1.395	13,10
5 + 7 + 12 + 15	1,48	1,85	2,96	3,71		10,00 (2,90 - 10,60)	3,17 B			3.150 (430 - 3.600)	1.575	14,50	0,90 + 1,20 + 1,70 + 2,20	1,71	2,13	3,41	4,27		11,52 (3,40 - 14,20)	4,14 A			2.780 (420 - 4.230)	1.390	13,10
5 + 7 + 12 + 18	1,36	1,69	2,71	4,24		10,00 (2,90 - 10,60)	3,41 A			2.930 (470 - 3.360)	1.465	13,50	0,90 + 1,10 + 1,60 + 2,40	1,56	1,95	3,12	4,89		11,52 (3,40 - 14,20)	4,24 A			2.720 (490 - 4.130)	1.360	12,80
5 + 7 + 12 + 21	1,25	1,56	2,50	4,69		10,00 (2,90 - 10,80)	3,41 A			2.930 (470 - 3.520)	1.465	13,50	0,80 + 1,00 + 1,50 + 2,50	1,44	1,80	2,88	5,40		11,52 (3,40 - 14,40)	4,24 A			2.720 (490 - 4.200)	1.360	12,80
5 + 7 + 12 + 24	1,16	1,45	2,32	5,07		10,00 (2,90 - 10,80)	3,50 A			2.860 (510 - 3.450)	1.430	13,20	0,70 + 0,90 + 1,50 + 2,80	1,34	1,67	2,67	5,84		11,52 (3,40 - 14,40)	4,25 A			2.710 (490 - 4.180)	1.355	12,70
5 + 7 + 15 + 15	1,38	1,72	3,45	3,45		10,00 (2,90 - 10,60)	3,26 A			3.070 (430 - 3.600)	1.535	14,20	0,90 + 1,10 + 2,00 + 2,00	1,59	1,99	3,97	3,97		11,52 (3,40 - 14,20)	4,16 A			2.770 (420 - 4.210)	1.385	13,00
5 + 7 + 15 + 18	1,27	1,59	3,17	3,97		10,00 (2,90 - 10,80)	3,41 A			2.930 (500 - 3.440)	1.465	13,50	0,80 + 1,00 + 1,80 + 2,30	1,46	1,83	3,66	4,57		11,52 (3,40 - 14,20)	4,25 A			2.710 (490 - 4.190)	1.355	12,70
5 + 7 + 15 + 21	1,18	1,47	2,94	4,41		10,00 (2,90 - 10,80)	3,41 A			2.930 (500 - 3.440)	1.465	13,50	0,70 + 0,90 + 1,70 + 2,40	1,36	1,69	3,39	5,08		11,52 (3,40 - 14,40)	4,25 A			2.710 (490 - 4.190)	1.355	12,70
5 + 7 + 15 + 24	1,10	1,37	2,74	4,79		10,00 (3,00 - 11,00)	3,50 A			2.860 (510 - 3.530)	1.430	13,20	0,70 + 0,90 + 1,60 + 2,60	1,26	1,58	3,16	5,52		11,52 (3,40 - 14,40)	4,27 A			2.700 (500 - 4.170)	1.350	12,70
5 + 7 + 18 + 18	1,17	1,47	3,68	3,68		10,00 (2,90 - 10,80)	3,57 A			2.800 (560 - 3.300)	1.400	12,90	0,70 + 0,90 + 2,10 + 2,10	1,35	1,69	4,24	4,24		11,52 (3,40 - 14,40)	4,30 A			2.680 (580 - 4.110)	1.340	12,60
5 + 7 + 18 + 21	1,10	1,37	3,42	4,11		10,00 (3,00 - 11,00)	3,57 A			2.800 (560 - 3.450)	1.400	12,90	0,70 + 0,90 + 2,00 + 2,30	1,26	1,58	3,95	4,73		11,52 (3,40 - 14,40)	4,30 A			2.680 (580 - 4.110)	1.340	12,60
5 + 7 + 18 + 24	1,02	1,28	3,21	4,49		10,00 (3,00 - 11,00)	3,57 A			2.800 (590 - 3.380)	1.400	12,90	0,70 + 0,80 + 1,80 + 2,50	1,18	1,48	3,69	5,17		11,52 (3,40 - 14,40)	4,31 A			2.670 (590 - 4.150)	1.335	12,50
5 + 7 + 21 + 21	1,02	1,28	3,85	3,85		10,00 (3,00 - 11,00)	3,

Free Multi 5x1 CU-5E34PBE. Minimum capacity connected: 4,5 kW. Maximum capacity connected: 17,5 kW

Indoor unit capacity	Cooling capacity (kW) Rooms						EER	SEER	Pdesign	Input power rating	A.E.C.	Current	Moisture removal	Heating capacity (kW) Rooms						COP	SCOP	Pdesign at -10°C	Input power rating	A.E.C.	Current
	A	B	C	D	E	Total (Min - Max)	W/W	W/W	kWh	W	kWh	230V (A)	Volume (l/h)	A	B	C	D	E	Total (Min - Max)	W/W	W/W	kWh	W	kWh	230V (A)
4 Rooms																										
5 + 9² + 15 + 24	1,03	1,82	2,60	4,55		10,00 (3,00 - 11,00)	3,50 A			2.860 (510 - 3.530)	1.430	13,20	0,70 + 1,20 + 1,60 + 2,50	1,20	2,09	2,99	5,24		11,52 (3,40 - 14,40)	4,27 A			2.700 (500 - 4.170)	1.350	12,70
5 + 9² + 18 + 18	1,11	1,95	3,47	3,47		10,00 (3,00 - 11,00)	3,57 A			2.800 (560 - 3.450)	1.400	12,90	0,70 + 1,30 + 2,00 + 2,00	1,28	2,24	4,00	4,00		11,52 (3,40 - 14,40)	4,30 A			2.680 (580 - 4.110)	1.340	12,60
5 + 9² + 18 + 21	1,03	1,82	3,25	3,90		10,00 (3,00 - 11,00)	3,57 A			2.800 (560 - 3.450)	1.400	12,90	0,70 + 1,20 + 1,80 + 2,30	1,20	2,09	3,74	4,49		11,52 (3,40 - 14,40)	4,30 A			2.680 (580 - 4.110)	1.340	12,60
5 + 9² + 18 + 24	0,97	1,71	3,05	4,27		10,00 (3,00 - 11,20)	3,57 A			2.800 (590 - 3.540)	1.400	12,90	0,70 + 1,10 + 1,70 + 2,40	1,12	1,97	3,51	4,92		11,52 (3,40 - 14,40)	4,31 A			2.670 (590 - 4.150)	1.335	12,50
5 + 9² + 21 + 21	0,97	1,71	3,66	3,66		10,00 (3,00 - 11,20)	3,57 A			2.800 (560 - 3.530)	1.400	12,90	0,70 + 1,10 + 2,10 + 2,10	1,12	1,98	4,21	4,21		11,52 (3,40 - 14,40)	4,30 A			2.680 (580 - 4.110)	1.340	12,60
5 + 9² + 21 + 24	0,92	1,61	3,45	4,02		10,00 (3,00 - 11,20)	3,57 A			2.800 (590 - 3.540)	1.400	12,90	0,70 + 1,00 + 2,00 + 2,30	1,06	1,85	3,97	4,64		11,52 (3,40 - 14,40)	4,31 A			2.670 (590 - 4.150)	1.335	12,50
5 + 12 + 12 + 12	1,42	2,86	2,86	2,86		10,00 (2,90 - 10,60)	3,26 A			3.070 (430 - 3.520)	1.535	14,20	0,90 + 1,70 + 1,70 + 1,70	1,65	3,29	3,29	3,29		11,52 (3,40 - 14,20)	4,17 A			2.760 (430 - 4.200)	1.380	13,00
5 + 12 + 12 + 15	1,33	2,67	2,67	3,33		10,00 (2,90 - 10,60)	3,26 A			3.070 (460 - 3.520)	1.535	14,20	0,80 + 1,60 + 1,60 + 1,90	1,54	3,07	3,07	3,84		11,52 (3,40 - 14,20)	4,19 A			2.750 (430 - 4.190)	1.375	12,90
5 + 12 + 12 + 18	1,23	2,46	2,46	3,85		10,00 (2,90 - 10,80)	3,41 A			2.930 (510 - 3.450)	1.465	13,50	0,80 + 1,50 + 1,50 + 2,30	1,41	2,84	2,84	4,43		11,52 (3,40 - 14,40)	4,27 A			2.700 (500 - 4.160)	1.350	12,70
5 + 12 + 12 + 21	1,13	2,29	2,29	4,29		10,00 (2,90 - 10,80)	3,41 A			2.930 (510 - 3.450)	1.465	13,50	0,70 + 1,50 + 1,50 + 2,40	1,32	2,63	2,63	4,94		11,52 (3,40 - 14,40)	4,27 A			2.700 (500 - 4.160)	1.350	12,70
5 + 12 + 12 + 24	1,07	2,13	2,13	4,67		10,00 (3,00 - 11,00)	3,50 A			2.860 (540 - 3.530)	1.430	13,20	0,70 + 1,40 + 1,40 + 2,50	1,22	2,46	2,46	5,38		11,52 (3,40 - 14,40)	4,28 A			2.690 (520 - 4.210)	1.345	12,60
5 + 12 + 15 + 15	1,24	2,50	3,13	3,13		10,00 (2,90 - 10,80)	3,26 A			3.070 (460 - 3.680)	1.535	14,20	0,80 + 1,50 + 1,80 + 1,80	1,44	2,88	3,60	3,60		11,52 (3,40 - 14,40)	4,20 A			2.740 (430 - 4.310)	1.370	12,90
5 + 12 + 15 + 18	1,16	2,32	2,90	3,62		10,00 (2,90 - 10,80)	3,50 A			2.860 (510 - 3.450)	1.430	13,20	0,70 + 1,50 + 1,70 + 2,10	1,34	2,67	3,34	4,17		11,52 (3,40 - 14,40)	4,28 A			2.690 (510 - 4.220)	1.345	12,60
5 + 12 + 15 + 21	1,08	2,16	2,70	4,06		10,00 (3,00 - 11,00)	3,50 A			2.860 (510 - 3.610)	1.430	13,20	0,70 + 1,40 + 1,60 + 2,30	1,25	2,49	3,11	4,67		11,52 (3,40 - 14,40)	4,28 A			2.690 (510 - 4.220)	1.345	12,60
5 + 12 + 15 + 24	1,01	2,03	2,53	4,43		10,00 (3,00 - 11,20)	3,50 A			2.860 (540 - 3.690)	1.430	13,20	0,70 + 1,30 + 1,60 + 2,50	1,17	2,33	2,92	5,10		11,52 (3,40 - 14,40)	4,30 A			2.680 (520 - 4.200)	1.340	12,60
5 + 12 + 18 + 18	1,08	2,16	3,38	3,38		10,00 (3,00 - 11,00)	3,57 A			2.800 (590 - 3.380)	1.400	12,90	0,70 + 1,40 + 1,90 + 1,90	1,25	2,49	3,89	3,89		11,52 (3,40 - 14,40)	4,25 A			2.710 (600 - 4.140)	1.355	12,70
5 + 12 + 18 + 21	1,01	2,03	3,16	3,80		10,00 (3,00 - 11,20)	3,57 A			2.800 (590 - 3.540)	1.400	12,90	0,70 + 1,30 + 1,80 + 2,20	1,17	2,33	3,65	4,37		11,52 (3,40 - 14,40)	4,25 A			2.710 (600 - 4.140)	1.355	12,70
5 + 12 + 18 + 24	0,95	1,90	2,98	4,17		10,00 (3,00 - 11,20)	3,57 A			2.800 (600 - 3.540)	1.400	12,90	0,70 + 1,20 + 1,70 + 2,40	1,10	2,19	3,43	4,80		11,52 (3,40 - 14,40)	4,27 A			2.700 (620 - 4.120)	1.350	12,70
5 + 12 + 21 + 21	0,95	1,91	3,57	3,57		10,00 (3,00 - 11,20)	3,57 A			2.800 (590 - 3.540)	1.400	12,90	0,70 + 1,20 + 2,10 + 2,10	1,10	2,20	4,11	4,11		11,52 (3,40 - 14,40)	4,25 A			2.710 (600 - 4.140)	1.355	12,70
5 + 15 + 15 + 15	1,18	2,94	2,94	2,94		10,00 (2,90 - 10,80)	3,26 A			3.070 (460 - 3.680)	1.535	14,20	0,70 + 1,70 + 1,70 + 1,70	1,35	3,39	3,39	3,39		11,52 (3,40 - 14,40)	4,22 A			2.730 (450 - 4.290)	1.365	12,80
5 + 15 + 15 + 18	1,10	2,74	2,74	3,42		10,00 (3,00 - 11,00)	3,50 A			2.860 (510 - 3.530)	1.430	13,20	0,70 + 1,60 + 1,60 + 2,00	1,25	3,16	3,16	3,95		11,52 (3,40 - 14,40)	4,30 A			2.680 (520 - 4.200)	1.340	12,60
5 + 15 + 15 + 21	1,03	2,56	2,56	3,85		10,00 (3,00 - 11,00)	3,50 A			2.860 (510 - 3.530)	1.430	13,20	0,70 + 1,60 + 1,60 + 2,30	1,18	2,95	2,95	4,44		11,52 (3,40 - 14,40)	4,30 A			2.680 (520 - 4.200)	1.340	12,60
5 + 15 + 15 + 24	0,96	2,41	2,41	4,22		10,00 (3,00 - 11,20)	3,50 A			2.860 (540 - 3.690)	1.430	13,20	0,70 + 1,50 + 1,50 + 2,40	1,10	2,78	2,78	4,86		11,52 (3,40 - 14,40)	4,31 A			2.670 (530 - 4.180)	1.335	12,50
5 + 15 + 18 + 18	1,02	2,56	3,21	3,21		10,00 (3,00 - 11,00)	3,57 A			2.800 (590 - 3.380)	1.400	12,90	0,70 + 1,60 + 1,80 + 1,80	1,18	2,96	3,69	3,69		11,52 (3,40 - 14,40)	4,27 A			2.700 (620 - 4.130)	1.350	12,70
5 + 15 + 18 + 21	0,96	2,41	3,01	3,62		10,00 (3,00 - 11,20)	3,57 A			2.800 (590 - 3.540)	1.400	12,90	0,70 + 1,50 + 1,70 + 2,10	1,11	2,78	3,47	4,16		11,52 (3,40 - 14,40)	4,27 A			2.700 (620 - 4.130)	1.350	12,70
5 + 18 + 18 + 18	0,97	3,01	3,01	3,01		10,00 (3,00 - 11,20)	3,64 A			2.750 (650 - 3.480)	1.375	12,70	0,70 + 1,70 + 1,70 + 1,70	1,11	3,47	3,47	3,47		11,52 (3,40 - 14,40)	4,20 A			2.740 (720 - 4.130)	1.370	12,90
7 + 7 + 7 + 7	2,00	2,00	2,00	2,00		8,00 (2,90 - 10,60)	3,67 A			2.180 (420 - 3.770)	1.090	10,10	1,30 + 1,30 + 1,30 + 1,30	2,88	2,88	2,88	2,88		11,52 (3,40 - 14,20)	4,07 A			2.830 (390 - 4.380)	1.415	13,30
7 + 7 + 7 + 9¹	2,00	2,00	2,00	2,50		8,50 (2,90 - 10,60)	3,57 A			2.380 (420 - 3.770)	1.190	11,00	1,30 + 1,30 + 1,30 + 1,50	2,80	2,80	2,80	3,50		11,90 (3,40 - 14,20)	3,98 A			2.990 (390 - 4.380)	1.495	14,10
7 + 7 + 7 + 9²	2,00	2,00	2,00	2,80		8,80 (2,90 - 10,60)	3,44 A			2.560 (420 - 3.770)	1.280	11,80	1,30 + 1,30 + 1,30 + 1,60	2,73	2,73	2,73	3,81		12,00 (3,40 - 14,20)	4,01 A			2.990 (390 - 4.380)	1.495	14,10
7 + 7 + 7 + 12	2,00	2,00	2,00	3,20		9,20 (2,90 - 10,60)	3,45 A			2.670 (420 - 3.680)	1.335	12,30	1,30 + 1,30 + 1,30 + 1,80	2,61	2,61	2,61	4,17		12,00 (3,40 - 14,20)	4,05 A			2.960 (400 - 4.340)	1.480	13,90
7 + 7 + 7 + 15	2,00	2,00	2,00	4,00		10,00 (2,90 - 10,60)		5,60 A++	10,00	3.150 (430 - 3.680)	625	14,50	1,30 + 1,30 + 1,30 + 2,30	2,40	2,40	2,40	4,80		12,00 (3,40 - 14,20)		3,80 A+	10,00	2.950 (420 - 4.320)	3.684	13,90
7 + 7 + 7 + 18	1,82	1,82	1,82	4,54		10,00 (2,90 - 10,60)	3,41 A			2.930 (470 - 3.360)	1.465	13,50	1,20 + 1,20 + 1,20 + 2,50	2,18	2,18	2,18	5,46		12,00 (3,40 - 14,20)	4,15 A			2.890 (480 - 4.160)	1.445	13,60
7 + 7 + 7 + 21	1,67	1,67	1,67	4,99		10,00 (2,90 - 10,60)	3,41 A			2.930 (470 - 3.360)	1.465	13,50	1,10 + 1,10 + 1,10 + 2,70	2,00	2,00	2,00	6,00		12,00 (3,40 - 14,20)	4,15 A			2.890 (480 - 4.160)	1.445	13,60
7 + 7 + 7 + 24	1,54	1,54	1,54	5,38		10,00 (2,90 - 10,80)	3,41 A			2.930 (500 - 3.450)	1.465	13,50	1,00 + 1,00 + 1,00 + 2,90	1,85	1,85	1,85	6,45		12,00 (3,40 - 14,40)	4,17 A			2.880 (480 - 4.200)	1.440	13,50
7 + 7 + 9¹ + 9¹	2,00	2,00	2,50	2,50		9,00 (2,90 - 10,60)	3,42 A			2.630 (420 - 3.770)	1.315	12,10	1,30 + 1,30 + 1,50 + 1,50	2,67	2,67	3,33	3,33		12,00 (3,40 - 14,20)	4,01 A			2.990 (390 - 4.380)	1.495	14,10
7 + 7 + 9¹ + 9²	2,00	2,00	2,50	2,80		9,30 (2,90 - 10,60)	3,31 A			2.810 (420 - 3.770)	1.405	13,00	1,30 + 1,30 + 1,50 + 1,60	2,58	2,58	3,23	3,61		12,00 (3,40 - 14,20)	4,01 A			2.990 (390 - 4.380)	1.495	14,10
7 + 7 + 9¹ + 12	2,00	2,00	2,50	3,20		9,70 (2,90 - 10,60)		5,60 A++	10,00	2.920 (420 - 3.680)	625	13,50	1,30 + 1,30 + 1,50 + 1,80	2,47	2,47	3,09	3,97		12,00 (3,40 - 14,20)		3,80 A+	10,00	2.960 (400 - 4.340)	3.684	13,90
7 + 7 + 9¹ + 15	1,90	1,90	2,38	3,82		10,00 (2,90 - 10,60)		5,60 A++	10,00	3.150 (430 - 3.680)	625	14,50	1,20 + 1,20 + 1,50 + 2,20	2,29	2,29	2,85	4,57		12,00 (3,40 - 14,20)		3,80 A+	10,00	2.950 (420 - 4.320)	3.684	13,90
7 + 7 + 9¹ + 18	1,74	1,74	2,17	4,35		10,00 (2,90 - 10,60)	3,41 A			2.930 (470 - 3.360)	1.465	13,50	1,10 + 1,10 + 1,40 + 2,40	2,09	2,09	2,60	5,22		12,00 (3,40 - 14,20)	4,15 A			2.890 (480 - 4.160)	1.445	13,60
7 + 7 + 9¹ + 21	1,60	1,60	2,00	4,80		10,00 (2,90 - 10,80)	3,41 A			2.930 (470 - 3.520)	1.465	13,50	1,00 + 1,00 + 1,30 + 2,60	1,92	1,92	2,40	5,76		12,00 (3,40 - 14,20)	4,15 A			2.890 (480 - 4.160)	1.445	13,60
7 + 7 + 9¹ + 24	1,48	1,48	1,85	5,19		10,00 (2,90 - 10,80)	3,41 A			2.930 (500 - 3.450)	1.465	13,50	0,90 + 0,90 + 1,20 + 2,90	1,78	1,78	2,22	6,22		12,00 (3,40 - 14,40)	4,17 A			2.880 (480 - 4.200)	1.440	13,50
7 + 7 + 9² + 9²	2,00	2,00	2,80	2,80		9,60 (2,90 - 10,60)	3,29 A			2.920 (420 - 3.770)	1.460	13,50	1,30 + 1,30 + 1,60 + 1,60	2,50	2,50	3,50	3,50		12,00 (3,40 - 14,20)	4,01 A			2.990 (390 - 4.380)	1.495	14,10
7 + 7 + 9² + 12	2,00	2,00	2,80	3,20		10,00 (2,90 - 10,60)		5,60 A++	10,00	3.150 (420 - 3.680)	625	14,50	1,30 + 1,30 + 1,60 + 1,80	2,40	2,40	3,36	3,84		12,00 (3,40 - 14,20)		3,80 A+	10,00	2.960 (400 - 4.340)	3.684	13,90
7 + 7 + 9² + 15	1,85	1,85	2,59	3,71		10,00 (2,90 - 10,60)	3,17 B			3.150 (430 - 3.680)	1.575	14,50	1,20 + 1,20 + 1,60 + 2,20	2,22	2,22	3,11	4,45		12,00 (3,40 - 14,20)	4,07 A			2.950 (420 - 4.320)	1.475	13,90
7 + 7 + 9² + 18	1,69	1,69	2,37	4,25		10,00 (2,90 - 10,60)	3,41 A			2.930 (470 - 3.360)	1.465	13,50	1,10 + 1,10 + 1,50 + 2,40	2,03	2,03	2,85	5,09		12,00 (3,40 - 14,20)	4,15 A			2.890 (480 - 4.160)	1.445	13,60
7 + 7 + 9² + 21	1,56	1,56	2,19	4,69		10,00 (2,90 - 10,80)	3,41 A			2.930 (470 - 3.520)	1.465	13,50	1,00 + 1,00 + 1,40 + 2,50	1,88	1,88	2,61	5,63		12,00 (3,40 - 14,40)	4,15 A			2.890 (480 - 4.220)	1.445	13,60
7 + 7 + 9² + 24	1,45	1,45	2,03	5,07		10,00 (2,90 - 10,80)	3,41 A			2.930 (500 - 3.450)	1.465	13,50	0,90 + 0,90 + 1,30 + 2,80	1,74	1,74	2,43	6,09		12,00 (3,40 - 14,40)	4,17 A			2.880 (480 - 4.200)	1.440	13,50
7 + 7 + 12 + 12	1,92	1,92	3,08	3,08		10,00 (2,90 - 10,60)		5,60 A++	10,00	3.070 (430 - 3.600)	625	14,20	1,20 + 1,20 + 1,70 + 1,70	2,31	2,31	3,69	3,69		12,00 (3,40 - 14,20)		3,80 A+	10,00	2.930 (420 - 4.230)	3.684	13,80
7 + 7 + 12 + 15	1,79	1,79	2,85	3,57		10,00 (2,90 - 10,60)	3,26 A			3.070 (430 - 3.600)	1.535	14,20	1,20 + 1,20 + 1,70 + 2,10	2,14	2,14	3,43	4,29		12,00 (3,40 - 14,20)	4,11 A			2.920 (420 - 4.210)	1.460	13,70
7 + 7 + 12 + 18	1,64	1,64	2,62	4,10		10,00 (2,90 - 10,80)	3,41 A			2.930 (500 - 3.440)	1.465	13,50	1,00 + 1,00 + 1,60 + 2,30	1,97	1,97	3,14	4,92		12,00 (3,40 - 14,20)	4,20 A			2.860 (490 - 4.120)	1.430	13,40
7 + 7 + 12 + 21	1,52	1,52	2,41	4,55		10,00 (2,90 - 10,80)	3,41 A			2.930 (500 - 3.440)	1.465	13,50	1,00 + 1,00 + 1,50 + 2,50	1,82	1,82	2,91	5,45		12,00 (3,40 - 14,20)	4,20 A			2.860 (490 - 4.190)	1.430	13,40
7 + 7 + 12 + 24	1,41	1,41	2,25	4,93		10,00 (2,90 - 11,00)	3,50 A			2.860 (510 - 3.530)	1.430	13,20	0,90 + 0,90 + 1,50 + 2,70	1,69	1,69	2,70	5,92		12,00 (3,40 - 14,40)	4,21 A			2.850 (500 - 4.170)	1.425	13,40
7 + 7 + 15 + 15	1,67	1,67	3,33	3,33		10,00 (2,90 - 10,60)	3,26 A			3.070 (430 - 3.600)	1.535	14,20	1,10 + 1,10 + 1,90 + 1,90	2,00	2,00	4,00	4,00		12,00 (3,40 - 14,20)	4,12 A			2.910 (430 - 4.200)	1.455	13,70
7 + 7 + 15 + 18	1,54	1,54	3,07	3,85		10,00 (2,90 - 10,80)	3,41 A			2.930 (500 - 3.450)	1.465	13,50	1,00 + 1,00 + 1,70 + 2,30	1,85	1,85	3,68	4,62		12,00 (3,40 - 14,40)	4,21 A			2.850 (490 - 4.170)	1.425	13,40
7 + 7 + 15 + 21	1,43	1,43	2,85	4,29		10,00 (2,90 - 10,80)	3,41 A			2.930 (500 - 3.450)	1.465	13,50	0,90 + 0,90 + 1,70 + 2,40	1,71	1,71	3,43	5,15		12,00 (3,40 - 14,40)	4,21 A			2.850 (490 - 4.170)	1.425	13,40
7 + 7 + 15 + 24	1,33	1,33	2,67	4,67		10,00 (2,90 - 11,00)	3,50 A			2.860 (510 - 3.530)	1.430	13,20	0,80 + 0,80 + 1,60 + 2,50	1,60	1,60	3,20	5,60		12,00 (3,40 - 14,40)	4,23 A			2.840 (510 - 4.220)	1.420	13,30
7 + 7 + 18 + 18	1,43	1,43	3,57	3,57		10,00 (2,90 - 10,80)	3,57 A			2.800 (560 - 3.300)	1.400	12,90	0,90 + 0,90 + 2,10 + 2,10	1,71	1,71	4,29	4,29		12,00 (3,40 - 14,20)	4,20 A			2.860 (590 - 4.160)	1.430	13,40
7 + 7 + 18 + 21	1,33	1,33	3,33	4,01		10,00 (2,90 - 11,00)	3,57 A			2.800 (560 - 3.460)	1.400	12,90	0,80 + 0,80 + 1,90 + 2,30	1,60	1,60	4,00	4,80		12,00 (3,40 - 14,20)	4,20 A			2.860 (590 - 4.160)	1.430	13,40
7 + 7 + 18 + 24	1,25	1,25	3,12	4,38		10,00 (2,90 - 11,20)	3,57 A			2.800 (560 - 3.540)	1.400	12,90	0,80 + 0,80 + 1,80 + 2,40	1,50	1,50	3,75	5,25		12,00 (3,40 - 14,40)	4,20 A			2.860 (600 - 4.140)	1.430	13,40
7 + 7 + 21 + 21	1,25	1,25	3,75	3,75		10,00 (2,90 - 11,20)	3,57 A			2.800 (560 - 3.540)	1.400	12,90	0,80 + 0,80 + 2,20 + 2,20	1,50	1,50	4,50	4,50		12,00 (3,40 - 14,40)	4,20 A			2.860 (590 - 4.160)	1.430	13,40
7 + 7 + 21 + 24	1,18	1,18	3,52	4,12		10,00 (2,90 - 11,20)	3,57 A			2.800 (560 - 3.540)	1.400	12,90	0,70 + 0,70 + 2,00 + 2,30	1,41	1,41	4,24	4,94		12,00 (3,40 - 14,40)	4,20 A			2.860 (600 - 4.140)	1.430	13,40
7 + 9¹ + 9¹ + 9¹	2,00	2,50	2,50	2,50		9,50 (2,90 - 10,60)	3,29 A			2.890 (420 - 3.770)	1.445	13,30	1,30 + 1,50 + 1,50 + 1,50	2,52	3,16	3,16	3,16		12,00 (3,40 - 14,20)	4,01 A			2.990 (390 - 4.380)	1.495	14,10
7 + 9¹ + 9¹ + 9²	2,00	2,50	2,50	2,80		9,80 (2,90 - 10,60)	3,19 B			3.070 (420 - 3.770)	1.535	14,20	1,30 + 1,50 + 1,50 + 1,60	2,45	3,06	3,06	3,43		12,00 (3,40 - 14,20)	4,01 A			2.990 (390 - 4.380)	1.495	14,10
7 + 9¹ + 9¹ + 12	1,96	2,45	2,45	3,14		10,00 (2,90 - 10,60)		5,60 A++	10,00	3.150 (420 - 3.680)	625	14,50	1,30 + 1,50 + 1,50 + 1,80	2,35	2,94	2,94	3,77		12,00 (3,40 - 14,20)		3,80 A+	10,00	2.960 (400 - 4.340)	3.684	13,90
7 + 9¹ + 9¹ + 15	1,82	2,27	2,27	3,64		10,00 (2,90 - 10,60)	3,17 B			3.150 (430 - 3.680)	1.575	14,50	1,20 + 1,50 + 1,50 + 2,10	2,18	2,73	2,73	4,36		12,00 (3,40 - 14,20)	4,07 A			2.950 (420 - 4.320)	1.475	13,90
7 + 9¹ + 9¹ + 18	1,67	2,08	2,08	4,17		10,00 (2,90 - 10,60)	3,41 A			2.930 (470 - 3.360)	1.465	13,50	1,10 + 1,30 + 1,30 + 2,40	2,00	2,50	2,50	5,00		12,00 (3,40 - 14,20)	4,15 A			2.890 (480 - 4.160)	1.445	13,60
7 + 9¹ + 9¹ + 21	1,54	1,92	1,92	4,62		10,00 (2,90 - 10,80)	3,41 A			2.930 (470 - 3.520)	1.465	13,50	1,00 + 1,20 + 1,20 + 2,50	1,84	2,31	2,31	5,54		12,00 (3,40 - 14,40)	4,15 A			2.890 (480 - 4.220)	1.445	13,60
7 + 9¹ + 9¹ + 24	1,42	1,79	1,79	5,00		10,00 (2,90 - 10,80)	3,41 A			2.930 (500 - 3.450)	1.465	13,50	0,90 + 1,20 + 1,20 + 2,70	1,71	2,14	2,14	6,01		12,00 (3,40 - 14,40)	4,17 A			2.880 (480 - 4.200)	1.440	13,50
7 + 9¹ + 9² + 9²	1,98	2,48	2,77	2,77		10,00 (2,90 - 10,60)		5,60 A++	10,00	3.220 (420 - 3.770)	625	14,80	1,30 + 1,50 + 1,60 + 1,60	2,37	2,97	3,33	3,33		12,00 (3,40 - 14,20)		3,80 A+	10,00	2.990 (390 - 4.380)	3.684	14,10
7 + 9¹ + 9² + 12	1,90	2,38	2,67	3,05		10,00 (2,90 - 10,60)		5,60 A++	10,00	3.150 (420 - 3.680)	625	14,50	1,20 + 1,50 + 1,60 + 1,70	2,28	2,86	3,20	3,66		12,00 (3,40 - 14,20)		3,80 A+	10,00	2.960 (400 - 4.340)	3.684	13,90
7 + 9¹ + 9² + 15	1,77	2,21	2,48	3,54		10,00 (2,90 - 10,60)	3,17 B			3.150 (430 - 3.680)	1.575	14,50	1,10 + 1,40 + 1,50 + 2,00	2,12	2,65	2,97	4,26		12,00 (3,40 - 14,20)	4,07 A			2.950 (420 - 4.320)	1.475	13,90
7 + 9¹ + 9² + 18	1,62	2,03	2,28	4,07		10,00 (2,90 - 10,80)	3,41 A			2.930 (470 - 3.520)	1.465	13,50	1,00 + 1,30 + 1,50 + 2,30	1,95	2,44	2,73	4,88		12,00 (3,40 - 14,20)	4,15 A			2.890 (480 - 4.160)	1.445	13,60
7 + 9¹ + 9² + 21	1,50	1,88	2,11	4,51		10,00 (2,90 - 10,80)	3,41 A			2.930 (470 - 3.520)	1.465	13,50	1,00 + 1,20 + 1,40 + 2,50	1,80	2,26	2,53	5,41		12,00 (3,40 - 14,40)	4,15 A			2.890 (480 - 4.220)	1.445	13,60
7 + 9¹ + 9² + 24	1,39	1,75	1,96	4,90		10,00 (2,90 - 11,00)	3,41 A			2.930 (500 - 3.610)	1.465	13,50	0,90 + 1,10 + 1,30 + 2,70	1,68	2,10	2,35	5,87		12,00 (3,40 - 14,40)	4,17 A			2.880 (480 - 4.200)	1.440	13,50
7 + 9¹ + 12 + 12	1,83	2,29	2,94	2,94		10,00 (2,90 - 10,60)	3,26 A			3.070 (430 - 3.600)	1.535	14,20	1,20 + 1,50 + 1,70 + 1,70	2,20	2,76	3,52	3,52		12,00 (3,40 - 14,20)	4,10 A			2.930 (420 - 4.230)	1.465	13,80
7 + 9¹ + 12 + 15	1,70	2,14	2,74	3,42		10,00 (2,90 - 10,60)	3,26 A			3.070 (430 - 3.600)	1.535	14,20	1,10 + 1,40 + 1,60 + 2,00	2,05	2,56	3,28	4,11		12,00 (3,40 - 14,20)	4,11 A			2.920 (420 - 4.210)	1.460	13,70
7 + 9¹ + 12 + 18	1,57	1,97	2,52	3,94		10,00 (2,90 - 10,80)	3,41 A			2.930 (500 - 3.440)	1.465	13,50	1,00 + 1,30 + 1,50 + 2,30	1,89	2,36	3,02	4,73		12,00 (3,40 - 14,20)	4,20 A			2.860 (490 - 4.120)	1.430	13,40
7 + 9¹ + 12 + 21	1,46	1,82	2,34	4,38		10,00 (2,90 - 10,80)	3,41 A			2.930 (500 - 3.440)	1.465	13,50	0,90 + 1,20 + 1,50 + 2,40	1,75	2,19	2,80	5,26		12,00 (3,40 - 14,20)	4,20 A			2.

Free Multi combinations table

Free Multi 5x1 CU-5E34PBE. Minimum capacity connected: 4,5 kW. Maximum capacity connected: 17,5 kW

Indoor unit capacity	Cooling capacity (kW) Rooms						EER	SEER	Pdesign	Input power rating	A.E.C.	Current	Moisture removal	Heating capacity (kW) Rooms						COP	SCOP	Pdesign at -10°C	Input power rating	A.E.C.	Current
	A	B	C	D	E	Total (Min - Max)	W/W	W/W	kW	W	kWh	230V (A)	Volume (l/h)	A	B	C	D	E	Total (Min - Max)	W/W	W/W	kW	W	kWh	230V (A)
4 Rooms																									
7 + 15 + 15 + 18	1,33	2,67	2,67	3,33		10,00 (2,90 - 11,00)	3,50 A			2.860 (510 - 3.530)	1.430	13,20	0,80 + 1,60 + 1,60 + 1,90	1,60	3,20	3,20	4,00		12,00 (3,40 - 14,40)	4,18 A			2.870 (520 - 4.190)	1.435	13,50
7 + 15 + 15 + 21	1,25	2,50	2,50	3,75		10,00 (2,90 - 11,20)	3,50 A			2.860 (510 - 3.690)	1.430	13,20	0,80 + 1,50 + 1,50 + 2,20	1,50	3,00	3,00	4,50		12,00 (3,40 - 14,40)	4,18 A			2.870 (520 - 4.190)	1.435	13,50
7 + 15 + 15 + 24	1,18	2,35	2,35	4,12		10,00 (2,90 - 11,20)	3,50 A			2.860 (520 - 3.610)	1.430	13,20	0,70 + 1,50 + 1,50 + 2,30	1,41	2,82	2,82	4,95		12,00 (3,40 - 14,40)	4,20 A			2.860 (530 - 4.170)	1.430	13,40
7 + 15 + 18 + 18	1,24	2,50	3,13	3,13		10,00 (2,90 - 11,20)	3,57 A			2.800 (560 - 3.540)	1.400	12,90	0,80 + 1,50 + 1,80 + 1,80	1,50	3,00	3,75	3,75		12,00 (3,40 - 14,40)	4,23 A			2.840 (620 - 4.110)	1.420	13,30
7 + 15 + 18 + 21	1,18	2,35	2,94	3,53		10,00 (2,90 - 11,20)	3,57 A			2.800 (560 - 3.540)	1.400	12,90	0,70 + 1,50 + 1,70 + 2,00	1,41	2,82	3,53	4,24		12,00 (3,40 - 14,40)	4,23 A			2.840 (620 - 4.110)	1.420	13,30
7 + 18 + 18 + 18	1,18	2,94	2,94	2,94		10,00 (2,90 - 11,20)	3,64 A			2.750 (660 - 3.480)	1.375	12,70	0,70 + 1,70 + 1,70 + 1,70	1,41	3,53	3,53	3,53		12,00 (3,40 - 14,40)	4,11 A			2.920 (730 - 4.120)	1.460	13,70
9¹ + 9¹ + 9¹ + 9¹	2,50	2,50	2,50	2,50		10,00 (2,90 - 10,60)		5,60 A++	10,00	3.220 (420 - 3.770)	625	14,80	1,50 + 1,50 + 1,50 + 1,50	3,00	3,00	3,00	3,00		12,00 (3,40 - 14,20)		3,80 A+	10,00	2.990 (390 - 4.380)	3.684	14,10
9¹ + 9¹ + 9¹ + 9²	2,43	2,43	2,43	2,71		10,00 (2,90 - 10,60)		5,60 A++	10,00	3.220 (420 - 3.770)	625	14,80	1,50 + 1,50 + 1,50 + 1,60	2,91	2,91	2,91	3,27		12,00 (3,40 - 14,20)		3,80 A+	10,00	2.990 (390 - 4.380)	3.684	14,10
9¹ + 9¹ + 9¹ + 12	2,34	2,34	2,34	2,98		10,00 (2,90 - 10,60)	3,17 B			3.150 (420 - 3.680)	1.575	14,50	1,50 + 1,50 + 1,50 + 1,70	2,80	2,80	2,80	3,60		12,00 (3,40 - 14,20)	4,05 A			2.960 (400 - 4.340)	1.480	13,90
9¹ + 9¹ + 9¹ + 15	2,17	2,17	2,17	3,49		10,00 (2,90 - 10,60)	3,17 B			3.150 (430 - 3.680)	1.575	14,50	1,40 + 1,40 + 1,40 + 2,00	2,61	2,61	2,61	4,17		12,00 (3,40 - 14,20)	4,07 A			2.950 (420 - 4.320)	1.475	13,90
9¹ + 9¹ + 9¹ + 18	2,00	2,00	2,00	4,00		10,00 (2,90 - 10,80)	3,41 A			2.930 (470 - 3.520)	1.465	13,50	1,30 + 1,30 + 1,30 + 2,30	2,40	2,40	2,40	4,80		12,00 (3,40 - 14,20)	4,15 A			2.890 (480 - 4.160)	1.445	13,60
9¹ + 9¹ + 9¹ + 21	1,85	1,85	1,85	4,45		10,00 (2,90 - 10,80)	3,41 A			2.930 (470 - 3.520)	1.465	13,50	1,20 + 1,20 + 1,20 + 2,50	2,22	2,22	2,22	5,34		12,00 (3,40 - 14,40)	4,15 A			2.890 (480 - 4.220)	1.445	13,60
9¹ + 9¹ + 9¹ + 24	1,72	1,72	1,72	4,84		10,00 (2,90 - 11,00)	3,41 A			2.930 (500 - 3.610)	1.465	13,50	1,10 + 1,10 + 1,10 + 2,60	2,07	2,07	2,07	5,79		12,00 (3,40 - 14,40)	4,17 A			2.880 (480 - 4.200)	1.440	13,50
9¹ + 9¹ + 9² + 9²	2,36	2,36	2,64	2,64		10,00 (2,90 - 10,60)	3,11 B			3.220 (420 - 3.770)	1.610	14,80	1,50 + 1,50 + 1,60 + 1,60	2,83	2,83	3,17	3,17		12,00 (3,40 - 14,20)	4,01 A			2.990 (390 - 4.380)	1.495	14,10
9¹ + 9¹ + 9² + 12	2,27	2,27	2,55	2,91		10,00 (2,90 - 10,60)	3,17 B			3.150 (420 - 3.680)	1.575	14,50	1,50 + 1,50 + 1,60 + 1,70	2,73	2,73	3,05	3,49		12,00 (3,40 - 14,20)	4,05 A			2.960 (400 - 4.340)	1.480	13,90
9¹ + 9¹ + 9² + 15	2,12	2,12	2,37	3,39		10,00 (2,90 - 10,60)	3,17 B			3.150 (430 - 3.680)	1.575	14,50	1,40 + 1,40 + 1,50 + 1,90	2,54	2,54	2,85	4,07		12,00 (3,40 - 14,20)	4,07 A			2.950 (420 - 4.320)	1.475	13,90
9¹ + 9¹ + 9² + 18	1,95	1,95	2,19	3,91		10,00 (2,90 - 10,80)	3,41 A			2.930 (470 - 3.520)	1.465	13,50	1,30 + 1,30 + 1,40 + 2,30	2,34	2,34	2,63	4,69		12,00 (3,40 - 14,40)	4,15 A			2.890 (480 - 4.220)	1.445	13,60
9¹ + 9¹ + 9² + 21	1,81	1,81	2,03	4,35		10,00 (2,90 - 10,80)	3,41 A			2.930 (470 - 3.520)	1.465	13,50	1,20 + 1,20 + 1,30 + 2,40	2,17	2,17	2,43	5,23		12,00 (3,40 - 14,40)	4,15 A			2.890 (480 - 4.220)	1.445	13,60
9¹ + 9¹ + 9² + 24	1,69	1,69	1,89	4,73		10,00 (2,90 - 11,00)	3,41 A			2.930 (500 - 3.610)	1.465	13,50	1,10 + 1,10 + 1,20 + 2,60	2,03	2,03	2,26	5,68		12,00 (3,40 - 14,40)	4,17 A			2.880 (480 - 4.200)	1.440	13,50
9¹ + 9¹ + 12 + 12	2,19	2,19	2,81	2,81		10,00 (2,90 - 10,60)	3,26 A			3.070 (430 - 3.600)	1.535	14,20	1,40 + 1,40 + 1,60 + 1,60	2,63	2,63	3,37	3,37		12,00 (3,40 - 14,20)	4,10 A			2.930 (420 - 4.230)	1.465	13,80
9¹ + 9¹ + 12 + 15	2,05	2,05	2,62	3,28		10,00 (2,90 - 10,80)	3,26 A			3.070 (430 - 3.770)	1.535	14,20	1,30 + 1,30 + 1,60 + 1,90	2,46	2,46	3,15	3,93		12,00 (3,40 - 14,20)	4,11 A			2.920 (420 - 4.210)	1.460	13,70
9¹ + 9¹ + 12 + 18	1,89	1,89	2,42	3,80		10,00 (2,90 - 10,80)	3,41 A			2.930 (500 - 3.440)	1.465	13,50	1,20 + 1,20 + 1,50 + 2,20	2,27	2,27	2,91	4,55		12,00 (3,40 - 14,40)	4,20 A			2.860 (490 - 4.190)	1.430	13,40
9¹ + 9¹ + 12 + 21	1,76	1,76	2,25	4,23		10,00 (2,90 - 11,00)	3,41 A			2.930 (500 - 3.610)	1.465	13,50	1,10 + 1,10 + 1,50 + 2,40	2,11	2,11	2,70	5,08		12,00 (3,40 - 14,40)	4,20 A			2.860 (490 - 4.190)	1.430	13,40
9¹ + 9¹ + 12 + 24	1,64	1,64	2,11	4,61		10,00 (2,90 - 11,00)	3,50 A			2.860 (510 - 3.530)	1.430	13,20	1,00 + 1,00 + 1,40 + 2,50	1,97	1,97	2,53	5,53		12,00 (3,40 - 14,40)	4,21 A			2.850 (500 - 4.170)	1.425	13,40
9¹ + 9¹ + 15 + 15	1,92	1,92	3,08	3,08		10,00 (2,90 - 10,80)	3,26 A			3.070 (430 - 3.770)	1.535	14,20	1,20 + 1,20 + 1,70 + 1,70	2,31	2,31	3,69	3,69		12,00 (3,40 - 14,40)	4,12 A			2.910 (430 - 4.330)	1.455	13,70
9¹ + 9¹ + 15 + 18	1,79	1,79	2,85	3,57		10,00 (2,90 - 10,80)	3,41 A			2.930 (500 - 3.450)	1.465	13,50	1,20 + 1,20 + 1,70 + 2,10	2,14	2,14	3,43	4,29		12,00 (3,40 - 14,40)	4,21 A			2.850 (490 - 4.170)	1.425	13,40
9¹ + 9¹ + 15 + 21	1,67	1,67	2,66	4,00		10,00 (2,90 - 11,00)	3,41 A			2.930 (500 - 3.610)	1.465	13,50	1,10 + 1,10 + 1,60 + 2,30	2,00	2,00	3,20	4,80		12,00 (3,40 - 14,40)	4,21 A			2.850 (490 - 4.170)	1.425	13,40
9¹ + 9¹ + 15 + 24	1,56	1,56	2,50	4,38		10,00 (2,90 - 11,20)	3,50 A			2.860 (510 - 3.690)	1.430	13,20	1,00 + 1,00 + 1,50 + 2,40	1,88	1,88	2,99	5,25		12,00 (3,40 - 14,40)	4,23 A			2.840 (510 - 4.220)	1.420	13,30
9¹ + 9¹ + 18 + 18	1,67	1,67	3,33	3,33		10,00 (2,90 - 11,00)	3,57 A			2.800 (560 - 3.460)	1.400	12,90	1,10 + 1,10 + 1,90 + 1,90	2,00	2,00	4,00	4,00		12,00 (3,40 - 14,40)	4,20 A			2.860 (590 - 4.160)	1.430	13,40
9¹ + 9¹ + 18 + 21	1,56	1,56	3,13	3,75		10,00 (2,90 - 11,20)	3,57 A			2.800 (560 - 3.540)	1.400	12,90	1,00 + 1,00 + 1,80 + 2,20	1,88	1,88	3,74	4,50		12,00 (3,40 - 14,40)	4,20 A			2.860 (590 - 4.160)	1.430	13,40
9¹ + 9¹ + 18 + 24	1,47	1,47	2,94	4,12		10,00 (2,90 - 11,20)	3,57 A			2.800 (560 - 3.540)	1.400	12,90	0,90 + 0,90 + 1,70 + 2,30	1,76	1,76	3,53	4,95		12,00 (3,40 - 14,40)	4,20 A			2.860 (600 - 4.140)	1.430	13,40
9¹ + 9¹ + 21 + 21	1,47	1,47	3,53	3,53		10,00 (2,90 - 11,20)	3,57 A			2.800 (560 - 3.540)	1.400	12,90	0,90 + 0,90 + 2,00 + 2,00	1,76	1,76	4,24	4,24		12,00 (3,40 - 14,40)	4,20 A			2.860 (590 - 4.160)	1.430	13,40
9¹ + 9² + 9² + 9²	2,29	2,57	2,57	2,57		10,00 (2,90 - 10,60)	3,11 B			3.220 (420 - 3.770)	1.610	14,80	1,50 + 1,60 + 1,60 + 1,60	2,76	3,08	3,08	3,08		12,00 (3,40 - 14,20)	4,01 A			2.990 (390 - 4.380)	1.495	14,10
9¹ + 9² + 9² + 12	2,21	2,48	2,48	2,83		10,00 (2,90 - 10,60)	3,17 B			3.150 (420 - 3.680)	1.575	14,50	1,40 + 1,50 + 1,50 + 1,70	2,65	2,97	2,97	3,41		12,00 (3,40 - 14,20)	4,05 A			2.960 (400 - 4.340)	1.480	13,90
9¹ + 9² + 9² + 15	2,07	2,31	2,31	3,31		10,00 (2,90 - 10,80)	3,17 B			3.150 (430 - 3.850)	1.575	14,50	1,30 + 1,50 + 1,50 + 1,90	2,47	2,78	2,78	3,97		12,00 (3,40 - 14,20)	4,07 A			2.950 (420 - 4.320)	1.475	13,90
9¹ + 9² + 9² + 18	1,90	2,14	2,14	3,82		10,00 (2,90 - 10,80)	3,41 A			2.930 (470 - 3.520)	1.465	13,50	1,20 + 1,40 + 1,40 + 2,20	2,29	2,56	2,56	4,59		12,00 (3,40 - 14,40)	4,15 A			2.890 (480 - 4.220)	1.445	13,60
9¹ + 9² + 9² + 21	1,76	1,99	1,99	4,26		10,00 (2,90 - 10,80)	3,41 A			2.930 (470 - 3.520)	1.465	13,50	1,10 + 1,30 + 1,30 + 2,40	2,13	2,38	2,38	5,11		12,00 (3,40 - 14,40)	4,15 A			2.890 (480 - 4.220)	1.445	13,60
9¹ + 9² + 9² + 24	1,66	1,85	1,85	4,64		10,00 (2,90 - 11,00)	3,41 A			2.930 (500 - 3.610)	1.465	13,50	1,10 + 1,20 + 1,20 + 2,50	1,98	2,23	2,23	5,56		12,00 (3,40 - 14,40)	4,17 A			2.880 (480 - 4.200)	1.440	13,50
9¹ + 9² + 12 + 12	2,13	2,39	2,74	2,74		10,00 (2,90 - 10,60)	3,26 A			3.070 (430 - 3.600)	1.535	14,20	1,40 + 1,50 + 1,60 + 1,60	2,56	2,88	3,28	3,28		12,00 (3,40 - 14,20)	4,10 A			2.930 (420 - 4.230)	1.465	13,80
9¹ + 9² + 12 + 15	2,00	2,24	2,56	3,20		10,00 (2,90 - 10,80)	3,26 A			3.070 (430 - 3.770)	1.535	14,20	1,30 + 1,50 + 1,60 + 1,80	2,40	2,69	3,07	3,84		12,00 (3,40 - 14,20)	4,11 A			2.920 (420 - 4.210)	1.460	13,70
9¹ + 9² + 12 + 18	1,85	2,07	2,37	3,71		10,00 (2,90 - 10,80)	3,41 A			2.930 (500 - 3.440)	1.465	13,50	1,20 + 1,30 + 1,50 + 2,20	2,22	2,49	2,84	4,45		12,00 (3,40 - 14,40)	4,20 A			2.860 (490 - 4.190)	1.430	13,40
9¹ + 9² + 12 + 21	1,72	1,93	2,21	4,14		10,00 (2,90 - 11,00)	3,41 A			2.930 (500 - 3.610)	1.465	13,50	1,10 + 1,20 + 1,40 + 2,40	2,06	2,32	2,65	4,97		12,00 (3,40 - 14,40)	4,20 A			2.860 (490 - 4.190)	1.430	13,40
9¹ + 9² + 12 + 24	1,61	1,81	2,06	4,52		10,00 (2,90 - 11,00)	3,50 A			2.860 (510 - 3.530)	1.430	13,20	1,00 + 1,20 + 1,30 + 2,50	1,93	2,17	2,48	5,42		12,00 (3,40 - 14,40)	4,21 A			2.850 (500 - 4.170)	1.425	13,40
9¹ + 9² + 15 + 15	1,87	2,11	3,01	3,01		10,00 (2,90 - 10,80)	3,26 A			3.070 (430 - 3.770)	1.535	14,20	1,20 + 1,40 + 1,70 + 1,70	2,25	2,53	3,61	3,61		12,00 (3,40 - 14,40)	4,12 A			2.910 (430 - 4.330)	1.455	13,70
9¹ + 9² + 15 + 18	1,74	1,96	2,80	3,50		10,00 (2,90 - 11,00)	3,41 A			2.930 (500 - 3.610)	1.465	13,50	1,10 + 1,30 + 1,60 + 2,00	2,09	2,35	3,36	4,20		12,00 (3,40 - 14,40)	4,21 A			2.850 (490 - 4.170)	1.425	13,40
9¹ + 9² + 15 + 21	1,63	1,83	2,61	3,93		10,00 (2,90 - 11,00)	3,41 A			2.930 (500 - 3.610)	1.465	13,50	1,00 + 1,20 + 1,60 + 2,30	1,95	2,20	3,14	4,71		12,00 (3,40 - 14,40)	4,21 A			2.850 (490 - 4.170)	1.425	13,40
9¹ + 9² + 15 + 24	1,53	1,72	2,45	4,30		10,00 (2,90 - 11,20)	3,50 A			2.860 (510 - 3.690)	1.430	13,20	1,00 + 1,10 + 1,50 + 2,40	1,84	2,06	2,94	5,16		12,00 (3,40 - 14,40)	4,23 A			2.840 (510 - 4.220)	1.420	13,30
9¹ + 9² + 18 + 18	1,63	1,83	3,27	3,27		10,00 (2,90 - 11,00)	3,57 A			2.800 (560 - 3.460)	1.400	12,90	1,00 + 1,20 + 1,90 + 1,90	1,96	2,20	3,92	3,92		12,00 (3,40 - 14,40)	4,20 A			2.860 (590 - 4.160)	1.430	13,40
9¹ + 9² + 18 + 21	1,53	1,72	3,07	3,68		10,00 (2,90 - 11,20)	3,57 A			2.800 (560 - 3.540)	1.400	12,90	1,00 + 1,10 + 1,70 + 2,10	1,84	2,06	3,68	4,42		12,00 (3,40 - 14,40)	4,20 A			2.860 (590 - 4.160)	1.430	13,40
9¹ + 9² + 18 + 24	1,44	1,62	2,89	4,05		10,00 (2,90 - 11,20)	3,57 A			2.800 (560 - 3.540)	1.400	12,90	0,90 + 1,00 + 1,70 + 2,30	1,73	1,94	3,47	4,86		12,00 (3,40 - 14,40)	4,20 A			2.860 (600 - 4.140)	1.430	13,40
9¹ + 9² + 21 + 21	1,44	1,62	3,47	3,47		10,00 (2,90 - 11,20)	3,57 A			2.800 (560 - 3.540)	1.400	12,90	0,90 + 1,00 + 2,00 + 2,00	1,73	1,95	4,16	4,16		12,00 (3,40 - 14,40)	4,20 A			2.860 (590 - 4.160)	1.430	13,40
9¹ + 12 + 12 + 12	2,08	2,64	2,64	2,64		10,00 (2,90 - 10,80)	3,26 A			3.070 (460 - 3.680)	1.535	14,20	1,30 + 1,60 + 1,60 + 1,60	2,49	3,17	3,17	3,17		12,00 (3,40 - 14,20)	4,14 A			2.900 (430 - 4.190)	1.450	13,60
9¹ + 12 + 12 + 15	1,94	2,48	2,48	3,10		10,00 (2,90 - 10,80)	3,26 A			3.070 (460 - 3.680)	1.535	14,20	1,30 + 1,50 + 1,50 + 1,70	2,32	2,98	2,98	3,72		12,00 (3,40 - 14,40)	4,07 A			2.950 (430 - 4.310)	1.475	13,90
9¹ + 12 + 12 + 18	1,80	2,30	2,30	3,60		10,00 (2,90 - 10,80)	3,50 A			2.860 (510 - 3.450)	1.430	13,20	1,20 + 1,50 + 1,50 + 2,10	2,16	2,76	2,76	4,32		12,00 (3,40 - 14,40)	4,23 A			2.840 (510 - 4.220)	1.420	13,30
9¹ + 12 + 12 + 21	1,67	2,15	2,15	4,03		10,00 (2,90 - 11,00)	3,50 A			2.860 (510 - 3.610)	1.430	13,20	1,10 + 1,40 + 1,40 + 2,30	2,01	2,58	2,58	4,83		12,00 (3,40 - 14,40)	4,23 A			2.840 (510 - 4.220)	1.420	13,30
9¹ + 12 + 12 + 24	1,57	2,01	2,01	4,41		10,00 (2,90 - 11,20)	3,50 A			2.860 (510 - 3.690)	1.430	13,20	1,00 + 1,30 + 1,30 + 2,40	1,88	2,42	2,42	5,28		12,00 (3,40 - 14,40)	4,17 A			2.880 (520 - 4.200)	1.440	13,50
9¹ + 12 + 15 + 15	1,82	2,34	2,92	2,92		10,00 (2,90 - 10,80)	3,26 A			3.070 (460 - 3.680)	1.535	14,20	1,20 + 1,50 + 1,70 + 1,70	2,19	2,81	3,50	3,50		12,00 (3,40 - 14,40)	4,08 A			2.940 (450 - 4.290)	1.470	13,80
9¹ + 12 + 15 + 18	1,70	2,18	2,72	3,40		10,00 (2,90 - 11,00)	3,50 A			2.860 (510 - 3.530)	1.430	13,20	1,10 + 1,40 + 1,60 + 1,90	2,04	2,61	3,27	4,08		12,00 (3,40 - 14,40)	4,17 A			2.880 (520 - 4.200)	1.440	13,50
9¹ + 12 + 15 + 21	1,59	2,04	2,55	3,82		10,00 (2,90 - 11,00)	3,50 A			2.860 (510 - 3.530)	1.430	13,20	1,00 + 1,30 + 1,60 + 2,20	1,90	2,45	3,06	4,59		12,00 (3,40 - 14,40)	4,17 A			2.880 (520 - 4.200)	1.440	13,50
9¹ + 12 + 15 + 24	1,49	1,92	2,40	4,19		10,00 (2,90 - 11,20)	3,50 A			2.860 (510 - 3.690)	1.430	13,20	0,90 + 1,20 + 1,50 + 2,40	1,80	2,30	2,87	5,03		12,00 (3,40 - 14,40)	4,18 A			2.870 (530 - 4.180)	1.435	13,50
9¹ + 12 + 18 + 18	1,59	2,05	3,18	3,18		10,00 (2,90 - 11,00)	3,57 A			2.800 (560 - 3.380)	1.400	12,90	1,00 + 1,30 + 1,80 + 1,80	1,91	2,45	3,82	3,82		12,00 (3,40 - 14,40)	4,21 A			2.850 (620 - 4.130)	1.425	13,40
9¹ + 12 + 18 + 21	1,50	1,92	2,99	3,59		10,00 (2,90 - 11,20)	3,57 A			2.800 (560 - 3.540)	1.400	12,90	1,00 + 1,20 + 1,70 + 2,10	1,80	2,30	3,59	4,31		12,00 (3,40 - 14,40)	4,21 A			2.850 (620 - 4.130)	1.425	13,40
9¹ + 15 + 15 + 15	1,72	2,76	2,76	2,76		10,00 (2,90 - 11,00)	3,33 A			3.000 (460 - 3.770)	1.500	13,80	1,10 + 1,60 + 1,60 + 1,60	2,07	3,31	3,31	3,31		12,00 (3,40 - 14,40)	4,10 A			2.930 (450 - 4.280)	1.465	13,80
9¹ + 15 + 15 + 18	1,61	2,58	2,58	3,23		10,00 (2,90 - 11,00)	3,50 A			2.860 (510 - 3.530)	1.430	13,20	1,00 + 1,60 + 1,60 + 1,80	1,93	3,10	3,10	3,87		12,00 (3,40 - 14,40)	4,18 A			2.870 (520 - 4.190)	1.435	13,50
9¹ + 15 + 15 + 21	1,52	2,42	2,42	3,64		10,00 (2,90 - 11,20)	3,50 A			2.860 (510 - 3.690)	1.430	13,20	1,00 + 1,50 + 1,50 + 2,10	1,82	2,91	2,91	4,36		12,00 (3,40 - 14,40)	4,18 A			2.870 (520 - 4.190)	1.435	13,50
9¹ + 15 + 15 + 24	1,42	2,29	2,29	4,00		10,00 (2,90 - 11,20)	3,50 A			2.860 (520 - 3.610)	1.430	13,20	0,90 + 1,50 + 1,50 + 2,30	1,71	2,74	2,74	4,81		12,00 (3,40 - 14,40)	4,20 A			2.860 (530 - 4.170)	1.430	13,40
9¹ + 15 + 18 + 18	1,52	2,42	3,03	3,03		10,00 (2,90 - 11,20)	3,57 A			2.800 (560 - 3.540)	1.400	12,90	1,00 + 1,50 + 1,70 + 1,70	1,81	2,91	3,64	3,64		12,00 (3,40 - 14,40)	4,23 A			2.840 (620 - 4.110)	1.420	13,30
9¹ + 15 + 18 + 21	1,42	2,29	2,86	3,43		10,00 (2,90 - 11,20)	3,57 A			2.800 (560 - 3.540)	1.400	12,90	0,90 + 1,50 + 1,70 + 2,00	1,71	2,74	3,43	4,12		12,00 (3,40 - 14,40)	4,23 A			2.840 (620 - 4.110)	1.420	13,30
9¹ + 18 + 18 + 18	1,42	2,86	2,86	2,86		10,00 (2,90 - 11,20)	3,64 A			2.750 (660 - 3.480)	1.375	12,70	0,90 + 1,70 + 1,70 + 1,70	1,71	3,43	3,43	3,43		12,00 (3,40 - 14,40)	4,11 A			2.920 (730 - 4.120)	1.460	13,70
9² + 9² + 9² + 9²	2,50	2,50	2,50	2,50		10,00 (2,90 - 10,60)	3,11 B			3.220 (420 - 3.770)	1.610	14,80	1,50 + 1,50 + 1,50 + 1,50	3,00	3,00	3,00	3,00		12,00 (3,40 - 14,20)	4,01 A			2.990 (390 - 4.380)	1.495	14,10
9² + 9² + 9² + 12	2,41	2,41	2,41	2,77		10,00 (2,90 - 10,60)	3,17 B			3.150 (420 - 3.680)	1.575	14,50	1,50 + 1,50 + 1,50 + 1,60	2,90	2,90	2,90	3,30		12,00 (3,40 - 14,20)	4,05 A			2.960 (400 - 4.340)	1.480	13,90
9² + 9² + 9² + 15	2,26	2,26	2,26	3,22		10,00 (2,90 - 10,80)	3,17 B			3.150 (430 - 3.850)	1.575	14,50	1,50 + 1,50 + 1,50 + 1,80	2,71	2,71	2,71	3,87		12,00 (3,40 - 14,20)	4,07 A			2.950 (420 - 4.320)	1.475	13,90
9² + 9² + 9² + 18	2,09	2,09	2,09	3,73		10,00 (2,90 - 10,80)	3,41 A			2.930 (470 - 3.520)	1.465	13,50	1,40 + 1,40 + 1,40 + 2,20	2,51	2,51	2,51	4,47		12,00 (3,40 - 14,40)	4,15 A			2.890 (480 - 4.220)	1.445	13,60
9² + 9² + 9² + 21	1,94	1,94	1,94	4,18		10,00 (2,90 - 11,00)	3,41 A			2.930 (470 - 3.690)	1.465	13,50	1,30 + 1,30 + 1,30 + 2,40	2,33	2,33	2,33	5,01		12,00 (3,40 - 14,40)	4,15 A			2.890 (480 - 4.220)	1.445	13,60
9² + 9² + 9² + 24	1,82	1,82	1,82	4,54		10,00 (2,90 - 11,00)	3,41 A			2.930 (500 - 3.610)	1.465	13,50	1,20 + 1,20 + 1,20 + 2,50	2,18	2,18	2,18	5,46		12,00 (3,40 - 14,40)	4,17 A			2.880 (480 - 4.200)	1.440	13,50
9² + 9² + 12 + 12	2,33	2,33	2,67	2,67		10,00 (2,90 - 10,60)	3,26 A			3.070 (430 - 3.600)	1.535	14,20	1,50 + 1,50 + 1,60 + 1,60	2,80	2,80	3,20	3,20		12,00 (3,40 - 14,20)	4,10 A			2.930 (420 - 4.230)	1.465	13,80
9² + 9² + 12 + 15	2,19	2,19	2,49	3,13		10,00 (2,90 - 10,80)	3,26 A			3.070 (430 - 3.770)	1.535	14,20	1,40 + 1,40 + 1,50 + 1,80	2,63	2,63	2,99	3,75		12,00 (3,40 - 14,40)	4,11 A			2.920 (420 - 4.350)	1.460	13,70
9² + 9² + 12 + 18	2,03	2,03	2,32	3,62		10,00 (2,90 - 10,80)	3,41 A			2.930 (500 - 3.440)	1.465	13,50	1,30 + 1,30 + 1,50 +

Free Multi 5x1 CU-5E34PBE. Minimum capacity connected: 4,5 kW. Maximum capacity connected: 17,5 kW

Indoor unit capacity	Cooling capacity (kW) Rooms						EER	SEER	Pdesign	Input power rating	A.E.C.	Current	Moisture removal	Heating capacity (kW) Rooms						COP	SCOP	Pdesign at -10°C	Input power rating	A.E.C.	Current
	A	B	C	D	E	Total (Min - Max)	W/W	W/W	kWh	W	kWh	230V (A)	Volume (l/h)	A	B	C	D	E	Total (Min - Max)	W/W	W/W	kWh	W	kWh	230V (A)
5 Rooms																									
5 + 5 + 5 + 5 + 5	1,60	1,60	1,60	1,60	1,60	8,00 (2,90 - 11,50)	3,86 A			2.070 (510 - 3.940)	1.035	9,50	1,00 + 1,00 + 1,00 + 1,00	2,34	2,34	2,34	2,34		11,70 (3,40 - 14,50)	4,25 A		2,34	2.750 (500 - 4.240)	1.375	12,90
5 + 5 + 5 + 5 + 7	1,60	1,60	1,60	1,60	2,00	8,40 (2,90 - 11,50)	3,82 A			2.200 (510 - 3.940)	1.100	10,10	1,00 + 1,00 + 1,00 + 1,00	2,29	2,29	2,29	2,29		12,00 (3,40 - 14,50)	4,23 A		2,84	2.840 (510 - 4.220)	1.420	13,30
5 + 5 + 5 + 5 + 9¹	1,60	1,60	1,60	1,60	2,50	8,90 (2,90 - 11,50)	3,76 A			2.370 (510 - 3.940)	1.185	10,90	1,00 + 1,00 + 1,00 + 1,00	2,16	2,16	2,16	2,16		12,00 (3,40 - 14,50)	4,23 A		3,36	2.840 (510 - 4.220)	1.420	13,30
5 + 5 + 5 + 5 + 9²	1,60	1,60	1,60	1,60	2,80	9,20 (2,90 - 11,50)	3,72 A			2.470 (510 - 3.940)	1.235	11,40	1,00 + 1,00 + 1,00 + 1,00	2,09	2,09	2,09	2,09		12,00 (3,40 - 14,50)	4,23 A		3,64	2.840 (510 - 4.220)	1.420	13,30
5 + 5 + 5 + 5 + 12	1,60	1,60	1,60	1,60	3,20	9,60 (2,90 - 11,50)	3,62 A			2.650 (520 - 3.860)	1.325	12,20	1,00 + 1,00 + 1,00 + 1,00	2,00	2,00	2,00	2,00		12,00 (3,40 - 14,50)	4,18 A		4,00	2.870 (520 - 4.190)	1.435	13,50
5 + 5 + 5 + 5 + 15	1,54	1,54	1,54	1,54	3,84	10,00 (2,90 - 11,50)	3,50 A			2.860 (520 - 3.860)	1.430	13,20	1,00 + 1,00 + 1,00 + 1,00	1,85	1,85	1,85	1,85		12,00 (3,40 - 14,50)	4,20 A		4,60	2.860 (530 - 4.240)	1.430	13,40
5 + 5 + 5 + 5 + 18	1,40	1,40	1,40	1,40	4,40	10,00 (2,90 - 11,50)	3,56 A			2.810 (600 - 3.710)	1.405	13,00	0,90 + 0,90 + 0,90 + 0,90	1,68	1,68	1,68	1,68		12,00 (3,40 - 14,50)	4,17 A		5,28	2.880 (630 - 4.160)	1.440	13,50
5 + 5 + 5 + 5 + 21	1,29	1,29	1,29	1,29	4,84	10,00 (2,90 - 11,50)	3,56 A			2.810 (600 - 3.710)	1.405	13,00	0,80 + 0,80 + 0,80 + 0,80	1,55	1,55	1,55	1,55		12,00 (3,40 - 14,50)	4,17 A		5,80	2.880 (630 - 4.160)	1.440	13,50
5 + 5 + 5 + 5 + 24	1,19	1,19	1,19	1,19	5,24	10,00 (2,90 - 11,50)	3,56 A			2.810 (610 - 3.630)	1.405	13,00	0,70 + 0,70 + 0,70 + 0,70	1,43	1,43	1,43	1,43		12,00 (3,40 - 14,50)	4,18 A		6,28	2.870 (650 - 4.150)	1.435	13,50
5 + 5 + 5 + 7 + 7	1,60	1,60	1,60	2,00	2,00	8,80 (2,90 - 11,50)	3,71 A			2.370 (510 - 3.860)	1.185	10,90	1,00 + 1,00 + 1,00 + 1,30	2,18	2,18	2,18	2,73		12,00 (3,40 - 14,50)	4,23 A		2,73	2.840 (520 - 4.210)	1.420	13,30
5 + 5 + 5 + 7 + 9¹	1,60	1,60	1,60	2,00	2,50	9,30 (2,90 - 11,50)	3,66 A			2.540 (510 - 3.860)	1.270	11,70	1,00 + 1,00 + 1,00 + 1,30	2,06	2,06	2,06	2,58		12,00 (3,40 - 14,50)	4,23 A		3,24	2.840 (520 - 4.210)	1.420	13,30
5 + 5 + 5 + 7 + 9²	1,60	1,60	1,60	2,00	2,80	9,60 (2,90 - 11,50)	3,62 A			2.650 (510 - 3.860)	1.325	12,20	1,00 + 1,00 + 1,00 + 1,30	2,00	2,00	2,00	2,50		12,00 (3,40 - 14,50)	4,23 A		3,50	2.840 (520 - 4.210)	1.420	13,30
5 + 5 + 5 + 7 + 12	1,60	1,60	1,60	2,00	3,20	10,00 (2,90 - 11,50)	3,50 A			2.860 (520 - 3.860)	1.430	13,20	1,00 + 1,00 + 1,00 + 1,30	1,92	1,92	1,92	2,40		12,00 (3,40 - 14,50)	4,20 A		3,84	2.860 (530 - 4.240)	1.430	13,40
5 + 5 + 5 + 7 + 15	1,48	1,48	1,48	1,85	3,71	10,00 (2,90 - 11,50)	3,50 A			2.860 (550 - 3.860)	1.430	13,20	0,90 + 0,90 + 0,90 + 1,20	1,78	1,78	1,78	2,22		12,00 (3,40 - 14,50)	4,20 A		4,44	2.860 (550 - 4.230)	1.430	13,40
5 + 5 + 5 + 7 + 18	1,36	1,36	1,36	1,68	4,24	10,00 (2,90 - 11,50)	3,56 A			2.810 (610 - 3.710)	1.405	13,00	0,90 + 0,90 + 0,90 + 1,10	1,63	1,63	1,63	2,03		12,00 (3,40 - 14,50)	4,17 A		5,08	2.880 (650 - 4.150)	1.440	13,50
5 + 5 + 5 + 7 + 21	1,25	1,25	1,25	1,56	4,69	10,00 (2,90 - 11,50)	3,56 A			2.810 (610 - 3.710)	1.405	13,00	0,80 + 0,80 + 0,80 + 1,00	1,50	1,50	1,50	1,87		12,00 (3,40 - 14,50)	4,17 A		5,63	2.880 (650 - 4.150)	1.440	13,50
5 + 5 + 5 + 7 + 24	1,16	1,16	1,16	1,45	5,07	10,00 (2,90 - 11,50)	3,55 A			2.820 (620 - 3.630)	1.410	13,00	0,70 + 0,70 + 0,70 + 0,90	1,39	1,39	1,39	1,74		12,00 (3,40 - 14,50)	4,18 A		6,09	2.870 (650 - 4.140)	1.435	13,50
5 + 5 + 5 + 9¹ + 9¹	1,60	1,60	1,60	2,50	2,50	9,80 (2,90 - 11,50)	3,51 A			2.790 (510 - 3.860)	1.395	12,90	1,00 + 1,00 + 1,00 + 1,50	1,96	1,96	1,96	3,06		12,00 (3,40 - 14,50)	4,23 A		3,06	2.840 (520 - 4.210)	1.420	13,30
5 + 5 + 5 + 9¹ + 9²	1,58	1,58	1,58	2,48	2,78	10,00 (2,90 - 11,50)	3,50 A			2.860 (510 - 3.860)	1.430	13,20	1,00 + 1,00 + 1,00 + 1,50	1,90	1,90	1,90	2,97		12,00 (3,40 - 14,50)	4,23 A		3,33	2.840 (520 - 4.210)	1.420	13,30
5 + 5 + 5 + 9¹ + 12	1,52	1,52	1,52	2,38	3,06	10,00 (2,90 - 11,50)	3,50 A			2.860 (520 - 3.860)	1.430	13,20	1,00 + 1,00 + 1,00 + 1,50	1,83	1,83	1,83	2,85		12,00 (3,40 - 14,50)	4,20 A		3,66	2.860 (530 - 4.240)	1.430	13,40
5 + 5 + 5 + 9¹ + 15	1,42	1,42	1,42	2,20	3,54	10,00 (2,90 - 11,50)	3,50 A			2.860 (550 - 3.860)	1.430	13,20	0,90 + 0,90 + 0,90 + 1,40	1,70	1,70	1,70	2,65		12,00 (3,40 - 14,50)	4,20 A		4,25	2.860 (550 - 4.230)	1.430	13,40
5 + 5 + 5 + 9¹ + 18	1,30	1,30	1,30	2,03	4,07	10,00 (2,90 - 11,50)	3,56 A			2.810 (610 - 3.710)	1.405	13,00	0,80 + 0,80 + 0,80 + 1,30	1,56	1,56	1,56	2,44		12,00 (3,40 - 14,50)	4,17 A		4,88	2.880 (650 - 4.150)	1.440	13,50
5 + 5 + 5 + 9¹ + 21	1,20	1,20	1,20	1,88	4,52	10,00 (2,90 - 11,50)	3,56 A			2.810 (610 - 3.710)	1.405	13,00	0,70 + 0,70 + 0,70 + 1,20	1,44	1,44	1,44	2,26		12,00 (3,40 - 14,50)	4,17 A		5,42	2.880 (650 - 4.150)	1.440	13,50
5 + 5 + 5 + 9¹ + 24	1,12	1,12	1,12	1,74	4,90	10,00 (2,90 - 11,50)	3,55 A			2.820 (620 - 3.630)	1.410	13,00	0,70 + 0,70 + 0,70 + 1,10	1,34	1,34	1,34	2,10		12,00 (3,40 - 14,50)	4,18 A		5,88	2.870 (650 - 4.140)	1.435	13,50
5 + 5 + 5 + 9² + 9²	1,54	1,54	1,54	2,69	2,69	10,00 (2,90 - 11,50)	3,50 A			2.860 (510 - 3.860)	1.430	13,20	1,00 + 1,00 + 1,00 + 1,60	1,85	1,85	1,85	3,22		11,99 (3,40 - 14,50)	4,22 A		3,22	2.840 (520 - 4.210)	1.420	13,30
5 + 5 + 5 + 9² + 12	1,48	1,48	1,48	2,59	2,97	10,00 (2,90 - 11,50)	3,50 A			2.860 (520 - 3.860)	1.430	13,20	0,90 + 0,90 + 0,90 + 1,60	1,78	1,78	1,78	3,10		12,00 (3,40 - 14,50)	4,20 A		3,56	2.860 (530 - 4.240)	1.430	13,40
5 + 5 + 5 + 9² + 15	1,38	1,38	1,38	2,41	3,45	10,00 (2,90 - 11,50)	3,50 A			2.860 (550 - 3.860)	1.430	13,20	0,90 + 0,90 + 0,90 + 1,50	1,66	1,66	1,66	2,88		12,00 (3,40 - 14,50)	4,20 A		4,14	2.860 (550 - 4.230)	1.430	13,40
5 + 5 + 5 + 9² + 18	1,27	1,27	1,27	2,22	3,97	10,00 (2,90 - 11,50)	3,56 A			2.810 (610 - 3.710)	1.405	13,00	0,80 + 0,80 + 0,80 + 1,40	1,52	1,52	1,52	2,67		12,00 (3,40 - 14,50)	4,17 A		4,77	2.880 (650 - 4.150)	1.440	13,50
5 + 5 + 5 + 9² + 21	1,18	1,18	1,18	2,05	4,41	10,00 (2,90 - 11,50)	3,56 A			2.810 (610 - 3.710)	1.405	13,00	0,70 + 0,70 + 0,70 + 1,30	1,41	1,41	1,41	2,47		12,00 (3,40 - 14,50)	4,17 A		5,30	2.880 (650 - 4.150)	1.440	13,50
5 + 5 + 5 + 9² + 24	1,10	1,10	1,10	1,91	4,79	10,00 (2,90 - 11,50)	3,55 A			2.820 (620 - 3.630)	1.410	13,00	0,70 + 0,70 + 0,70 + 1,20	1,32	1,32	1,32	2,29		12,00 (3,40 - 14,50)	4,18 A		5,75	2.870 (650 - 4.140)	1.435	13,50
5 + 5 + 5 + 12 + 12	1,43	1,43	1,43	2,85	2,85	9,99 (2,90 - 11,50)	3,57 A			2.800 (550 - 3.780)	1.400	12,90	0,90 + 0,90 + 0,90 + 1,70	1,71	1,71	1,71	3,43		11,99 (3,40 - 14,50)	4,22 A		3,43	2.840 (560 - 4.200)	1.420	13,30
5 + 5 + 5 + 12 + 15	1,33	1,33	1,33	2,67	3,34	10,00 (2,90 - 11,50)	3,57 A			2.800 (550 - 3.780)	1.400	12,90	0,80 + 0,80 + 0,80 + 1,60	1,60	1,60	1,60	3,20		12,00 (3,40 - 14,50)	4,23 A		4,00	2.840 (560 - 4.190)	1.420	13,30
5 + 5 + 5 + 12 + 18	1,23	1,23	1,23	2,46	3,85	10,00 (2,90 - 11,50)	3,56 A			2.810 (610 - 3.630)	1.405	13,00	0,80 + 0,80 + 0,80 + 1,50	1,48	1,48	1,48	2,94		12,00 (3,40 - 14,50)	4,20 A		4,62	2.860 (660 - 4.190)	1.430	13,40
5 + 5 + 5 + 12 + 21	1,14	1,14	1,14	2,29	4,29	10,00 (2,90 - 11,50)	3,56 A			2.810 (610 - 3.630)	1.405	13,00	0,70 + 0,70 + 0,70 + 1,50	1,37	1,37	1,37	2,74		12,00 (3,40 - 14,50)	4,20 A		5,15	2.860 (660 - 4.190)	1.430	13,40
5 + 5 + 5 + 12 + 24	1,07	1,07	1,07	2,12	4,67	10,00 (2,90 - 11,50)	3,44 A			2.750 (650 - 3.630)	1.375	12,70	0,70 + 0,70 + 0,70 + 1,40	1,28	1,28	1,28	2,56		12,00 (3,40 - 14,50)	4,14 A		5,60	2.900 (680 - 4.170)	1.450	13,60
5 + 5 + 5 + 15 + 15	1,25	1,25	1,25	3,12	3,12	9,99 (2,90 - 11,50)	3,57 A			2.800 (550 - 3.780)	1.400	12,90	0,80 + 0,80 + 0,80 + 1,80	1,50	1,50	1,50	3,75		12,00 (3,40 - 14,50)	4,24 A		3,75	2.830 (580 - 4.180)	1.415	13,30
5 + 5 + 5 + 15 + 18	1,16	1,16	1,16	2,90	3,62	10,00 (2,90 - 11,50)	3,55 A			2.820 (620 - 3.630)	1.410	13,00	0,70 + 0,70 + 0,70 + 1,70	1,39	1,39	1,39	3,48		12,00 (3,40 - 14,50)	4,21 A		4,35	2.850 (680 - 4.180)	1.425	13,40
5 + 5 + 5 + 15 + 21	1,08	1,08	1,08	2,70	4,06	10,00 (2,90 - 11,50)	3,55 A			2.820 (620 - 3.630)	1.410	13,00	0,70 + 0,70 + 0,70 + 1,60	1,30	1,30	1,30	3,24		12,00 (3,40 - 14,50)	4,21 A		4,86	2.850 (680 - 4.180)	1.425	13,40
5 + 5 + 5 + 15 + 24	1,01	1,01	1,01	2,53	4,44	10,00 (2,90 - 11,50)	3,44 A			2.750 (650 - 3.640)	1.375	12,70	0,70 + 0,70 + 0,70 + 1,60	1,22	1,22	1,22	3,02		12,00 (3,40 - 14,50)	4,15 A		5,32	2.890 (690 - 4.160)	1.445	13,60
5 + 5 + 5 + 18 + 18	1,08	1,08	1,08	3,38	3,38	10,00 (2,90 - 11,50)	3,61 A			2.770 (710 - 3.570)	1.385	12,80	0,70 + 0,70 + 0,70 + 1,90	1,30	1,30	1,30	4,05		12,00 (3,40 - 14,50)	4,08 A		4,05	2.940 (790 - 4.190)	1.470	13,80
5 + 5 + 5 + 18 + 21	1,01	1,01	1,01	3,16	3,81	10,00 (2,90 - 11,50)	3,61 A			2.770 (710 - 3.570)	1.385	12,80	0,70 + 0,70 + 0,70 + 1,80	1,22	1,22	1,22	3,78		12,00 (3,40 - 14,50)	4,08 A		4,56	2.940 (790 - 4.190)	1.470	13,80
5 + 5 + 5 + 18 + 24	0,95	0,95	0,95	2,98	4,17	10,00 (2,90 - 11,50)	3,60 A			2.780 (750 - 3.580)	1.390	12,80	0,70 + 0,70 + 0,70 + 1,70	1,14	1,14	1,14	3,57		12,00 (3,40 - 14,50)	4,08 A		5,01	2.940 (810 - 4.180)	1.470	13,80
5 + 5 + 5 + 21 + 21	0,95	0,95	0,95	3,57	3,57	9,99 (2,90 - 11,50)	3,61 A			2.770 (710 - 3.570)	1.385	12,80	0,70 + 0,70 + 0,70 + 2,10	1,14	1,14	1,14	4,29		12,00 (3,40 - 14,50)	4,08 A		4,29	2.940 (790 - 4.190)	1.470	13,80
5 + 5 + 7 + 7 + 7	1,60	1,60	2,00	2,00	2,00	9,20 (2,90 - 11,50)	3,72 A			2.470 (510 - 3.860)	1.235	11,40	1,00 + 1,00 + 1,30 + 1,30	2,09	2,09	2,61	2,60		11,99 (3,40 - 14,50)	4,16 A		2,60	2.880 (520 - 4.200)	1.440	13,50
5 + 5 + 7 + 7 + 9¹	1,60	1,60	2,00	2,00	2,50	9,70 (2,90 - 11,50)	3,57 A			2.720 (510 - 3.860)	1.360	12,50	1,00 + 1,00 + 1,30 + 1,30	1,98	1,98	2,47	2,47		12,00 (3,40 - 14,50)	4,17 A		3,10	2.880 (520 - 4.200)	1.440	13,50
5 + 5 + 7 + 7 + 9²	1,60	1,60	2,00	2,00	2,80	10,00 (2,90 - 11,50)	3,50 A			2.860 (510 - 3.860)	1.430	13,20	1,00 + 1,00 + 1,30 + 1,30	1,92	1,92	2,40	2,40		12,00 (3,40 - 14,50)	4,17 A		3,36	2.880 (520 - 4.200)	1.440	13,50
5 + 5 + 7 + 7 + 12	1,54	1,54	1,92	1,92	3,08	10,00 (2,90 - 11,50)	3,50 A			2.860 (550 - 3.860)	1.430	13,20	1,00 + 1,00 + 1,20 + 1,20	1,85	1,85	2,31	2,31		12,00 (3,40 - 14,50)	4,20 A		3,68	2.860 (550 - 4.230)	1.430	13,40
5 + 5 + 7 + 7 + 15	1,43	1,43	1,79	1,79	3,56	10,00 (2,90 - 11,50)	3,48 A			2.870 (550 - 3.780)	1.435	13,20	0,90 + 0,90 + 1,20 + 1,20	1,71	1,71	2,14	2,14		12,00 (3,40 - 14,50)	4,21 A		4,30	2.850 (550 - 4.210)	1.425	13,40
5 + 5 + 7 + 7 + 18	1,31	1,31	1,64	1,64	4,10	10,00 (2,90 - 11,50)	3,56 A			2.810 (610 - 3.630)	1.405	13,00	0,80 + 0,80 + 1,00 + 1,00	1,57	1,57	1,97	1,97		12,00 (3,40 - 14,50)	4,18 A		4,92	2.870 (650 - 4.140)	1.435	13,50
5 + 5 + 7 + 7 + 21	1,21	1,21	1,52	1,52	4,54	10,00 (2,90 - 11,50)	3,56 A			2.810 (610 - 3.630)	1.405	13,00	0,80 + 0,80 + 1,00 + 1,00	1,45	1,45	1,82	1,82		12,00 (3,40 - 14,50)	4,18 A		5,46	2.870 (650 - 4.140)	1.435	13,50
5 + 5 + 7 + 7 + 24	1,13	1,13	1,41	1,41	4,92	10,00 (2,90 - 11,50)	3,55 A			2.820 (650 - 3.630)	1.410	13,00	0,70 + 0,70 + 0,90 + 0,90	1,35	1,35	1,69	1,69		12,00 (3,40 - 14,50)	4,20 A		5,92	2.860 (660 - 4.130)	1.430	13,40
5 + 5 + 7 + 9¹ + 9¹	1,57	1,57	1,96	2,45	2,45	10,00 (2,90 - 11,50)	3,50 A			2.860 (510 - 3.860)	1.430	13,20	1,00 + 1,00 + 1,30 + 1,50	1,88	1,88	2,36	2,94		12,00 (3,40 - 14,50)	4,17 A		2,94	2.880 (520 - 4.200)	1.440	13,50
5 + 5 + 7 + 9¹ + 9²	1,52	1,52	1,90	2,38	2,68	10,00 (2,90 - 11,50)	3,50 A			2.860 (510 - 3.860)	1.430	13,20	1,00 + 1,00 + 1,20 + 1,50	1,83	1,83	2,28	2,86		12,00 (3,40 - 14,50)	4,17 A		3,20	2.880 (520 - 4.200)	1.440	13,50
5 + 5 + 7 + 9¹ + 12	1,47	1,47	1,83	2,29	2,94	10,00 (2,90 - 11,50)	3,50 A			2.860 (550 - 3.860)	1.430	13,20	0,90 + 0,90 + 1,20 + 1,50	1,76	1,76	2,20	2,75		12,00 (3,40 - 14,50)	4,20 A		3,53	2.860 (550 - 4.230)	1.430	13,40
5 + 5 + 7 + 9¹ + 15	1,37	1,37	1,70	2,14	3,42	10,00 (2,90 - 11,50)	3,48 A			2.870 (550 - 3.780)	1.435	13,20	0,90 + 0,90 + 1,10 + 1,40	1,64	1,64	2,05	2,56		12,00 (3,40 - 14,50)	4,21 A		4,11	2.850 (550 - 4.210)	1.425	13,40
5 + 5 + 7 + 9¹ + 18	1,26	1,26	1,57	1,97	3,94	10,00 (2,90 - 11,50)	3,56 A			2.810 (610 - 3.630)	1.405	13,00	0,80 + 0,80 + 1,00 + 1,30	1,51	1,51	1,89	2,36		12,00 (3,40 - 14,50)	4,18 A		4,73	2.870 (650 - 4.140)	1.435	13,50
5 + 5 + 7 + 9¹ + 21	1,17	1,17	1,46	1,82	4,38	10,00 (2,90 - 11,50)	3,56 A			2.810 (610 - 3.630)	1.405	13,00	0,70 + 0,70 + 0,90 + 1,20	1,40	1,40	1,75	2,19		12,00 (3,40 - 14,50)	4,18 A		5,26	2.870 (650 - 4.140)	1.435	13,50
5 + 5 + 7 + 9¹ + 24	1,09	1,09	1,36	1,70	4,76	10,00 (2,90 - 11,50)	3,55 A			2.820 (650 - 3.630)	1.410	13,00	0,70 + 0,70 + 0,90 + 1,10	1,31	1,31	1,63	2,04		12,00 (3,40 - 14,50)	4,20 A		5,71	2.860 (660 - 4.130)	1.430	13,40
5 + 5 + 7 + 9² + 9²	1,48	1,48	1,86	2,59	2,59	10,00 (2,90 - 11,50)	3,50 A			2.860 (510 - 3.860)	1.430	13,20	0,90 + 0,90 + 1,20 + 1,60	1,78	1,78	2,22	3,11		12,00 (3,40 - 14,50)	4,17 A		3,11	2.880 (520 - 4.200)	1.440	13,50
5 + 5 + 7 + 9² + 12	1,43	1,43	1,78	2,50	2,86	10,00 (2,90 - 11,50)	3,50 A			2.860 (550 - 3.860)	1.430	13,20	0,90 + 0,90 + 1,10 + 1,50	1,71	1,71	2,14	3,00		12,00 (3,40 - 14,50)	4,20 A		3,44	2.860 (550 - 4.230)	1.430	13,40
5 + 5 + 7 + 9² + 15	1,33	1,33	1,67	2,33	3,34	10,00 (2,90 - 11,50)	3,48 A			2.870 (550 - 3.780)	1.435	13,20	0,80 + 0,80 + 1,10 + 1,50	1,60	1,60	2,00	2,80		12,00 (3,40 - 14,50)	4,21 A		4,00	2.850 (550 - 4.210)	1.425	13,40
5 + 5 + 7 + 9² + 18	1,23	1,23	1,54	2,15	3,85	10,00 (2,90 - 11,50)	3,56 A			2.810 (610 - 3.630)	1.405	13,00	0,80 + 0,80 + 1,00 + 1,40	1,48	1,48	1,84	2,58		12,00 (3,40 - 14,50)	4,18 A		4,62	2.870 (650 - 4.140)	1.435	13,50
5 + 5 + 7 + 9² + 21	1,14	1,14	1,43	2,00	4,29	10,00 (2,90 - 11,50)	3,56 A			2.810 (610 - 3.630)	1.405	13,00	0,70 + 0,70 + 0,90 + 1,30	1,37	1,37	1,71	2,40		12,00 (3,40 - 14,50)	4,18 A		5,15	2.870 (650 - 4.140)	1.435	13,50
5 + 5 + 7 + 9² + 24	1,07	1,07	1,32	1,87	4,67	10,00 (2,90 - 11,50)	3,55 A			2.820 (650 - 3.630)	1.410	13,00	0,70 + 0,70 + 0,80 + 1,20	1,28	1,28	1,60	2,24		12,00 (3,40 - 14,50)	4,20 A		5,60	2.860 (660 - 4.130)	1.430	13,40
5 + 5 + 7 + 12 + 12	1,38	1,38	1,72	2,76	2,76	10,00 (2,90 - 11,50)	3,57 A			2.800 (550 - 3.780)	1.400	12,90	0,90 + 0,90 + 1,10 + 1,60	1,66	1,66	2,06	3,31		12,00 (3,40 - 14,50)	4,23 A		3,31	2.840 (560 - 4.190)	1.420	13,30
5 + 5 + 7 + 12 + 15	1,29	1,29	1,61	2,58	3,23	10,00 (2,90 - 11,50)	3,57 A			2.800 (560 - 3.780)	1.400	12,90	0,80 + 0,80 + 1,00 + 1,60	1,55	1,55	1,93	3,10		12,00 (3,40 - 14,50)	4,24 A		3,87	2.830 (580 - 4.180)	1.415	13,30
5 + 5 + 7 + 12 + 18	1,19	1,19	1,49	2,39	3,74	10,00 (2,90 - 11,50)	3,55 A			2.820 (620 - 3.630)	1.410	13,00	0,70 + 0,70 + 0,90 + 1,50	1,43	1,43	1,79	2,87		12,00 (3,40 - 14,50)	4,21 A		4,48	2.850 (680 - 4.180)	1.425	13,40
5 + 5 + 7 + 12 + 21	1,11	1,11	1,39	2,22	4,17	10,00 (2,90 - 11,50)	3,55 A			2.820 (620 - 3.630)	1.410	13,00	0,70 + 0,70 + 0,90 + 1,40	1,33	1,33	1,67	2,67		12,00 (3,40 - 14,50)	4,21 A		5,00	2.850 (680 - 4.180)	1.425	13,40
5 + 5 + 7 + 12 + 24	1,04	1,04	1,29	2,08	4,55	10,00 (2,90 - 11,50)	3,44 A			2.750 (660 - 3.640)	1.375	12,70	0,70 + 0,70 + 0,80 + 1,30	1,25	1,25	1,56	2,49		12,00 (3,40 - 14,50)	4,15 A		5,45	2.890 (690 - 4.160)	1.445	13,60
5 + 5 + 7 + 15 + 15	1,21	1,21	1,52	3,03	3,03	10,00 (2,90 - 11,50)	3,57 A			2.800 (560 - 3.780)	1.400	12,90	0,80 + 0,80 + 1,00 + 1,70	1,45	1,45	1,82	3,64		12,00 (3,40 - 14,50)	4,18 A		3,64	2.870 (580 - 4.170)	1.435	13,50
5 + 5 + 7 + 15 + 18	1,13	1,13	1,40	2,82	3,52	10,00 (2,90 - 11,50)	3,55 A			2.820 (630 - 3.630)	1.410	13,00	0,70 + 0,70 + 0,90 + 1,70	1,35	1,35	1,69	3,38		12,00 (3,40 - 14,50)	4,14 A		4,23	2.900 (690 - 4.160)	1.450	13,60
5 + 5 + 7 + 15 + 21	1,05	1,05	1,32	2,63	3,95	10,00 (2,90 - 11,50)	3,55 A			2.820 (630 - 3.630)	1.410	13,00	0,70 + 0,70 + 0,80 + 1,60	1,26	1,26	1,58	3,16		12,00 (3,40 - 14,50)	4,14 A		4,74	2.900 (690 - 4.160)	1.450	13,60
5 + 5 + 7 + 15 + 24	0,99	0,99	1,23	2,47	4,32	10,00 (2,90 - 11,50)	3,44 A			2.750 (660 - 3.640)	1.375	12,70	0,70 + 0,70 + 0,80 + 1,50	1,19	1,19	1,47	2,96		12,00 (3,40 - 14,50)	4,15 A		5,19	2.890 (700 - 4.150)	1.445	13,60
5 + 5 + 7 + 18 + 18	1,05	1,05	1,32	3,29	3,29	10,00 (2,90 - 11,50)	3

Free Multi combinations table

Free Multi 5x1 CU-5E34PBE. Minimum capacity connected: 4,5 kW. Maximum capacity connected: 17,5 kW

Indoor unit capacity	Cooling capacity (kW) Rooms						EER	SEER	Pdesign	Input power rating	A.E.C.	Current	Moisture removal	Heating capacity (kW) Rooms						COP	SCOP	Pdesign at -10°C	Input power rating	A.E.C.	Current
	A	B	C	D	E	Total (Min - Max)	W/W	W/W	kWh	W	kWh	230V (A)	Volume (l/h)	A	B	C	D	E	Total (Min - Max)	W/W	W/W	kWh	W	kWh	230V (A)
5 Rooms																									
5 + 5 + 9² + 12 + 15	1,21	1,21	2,13	2,42	3,03	10,00 (2,90 - 11,50)	3,57 A			2.800 (560 - 3.780)	1.400	12,90	0,80 + 0,80 + 1,40 + 1,50	1,45	1,45	2,55	2,91		12,00 (3,40 - 14,50)	4,24 A		3,64	2.830 (580 - 4.180)	1.415	13,30
5 + 5 + 9² + 12 + 18	1,13	1,13	1,97	2,25	3,52	10,00 (2,90 - 11,50)	3,55 A			2.820 (620 - 3.630)	1.410	13,00	0,70 + 0,70 + 1,30 + 1,50	1,35	1,35	2,37	2,70		12,00 (3,40 - 14,50)	4,21 A		4,23	2.850 (680 - 4.180)	1.425	13,40
5 + 5 + 9² + 12 + 21	1,05	1,05	1,84	2,11	3,95	10,00 (2,90 - 11,50)	3,55 A			2.820 (620 - 3.630)	1.410	13,00	0,70 + 0,70 + 1,20 + 1,40	1,26	1,26	2,21	2,53		12,00 (3,40 - 14,50)	4,21 A		4,74	2.850 (680 - 4.180)	1.425	13,40
5 + 5 + 9² + 12 + 24	0,99	0,99	1,72	1,98	4,32	10,00 (2,90 - 11,50)	3,64 A			2.750 (660 - 3.640)	1.375	12,70	0,70 + 0,70 + 1,10 + 1,30	1,19	1,19	2,06	2,37		12,00 (3,40 - 14,50)	4,15 A		5,19	2.890 (690 - 4.160)	1.445	13,60
5 + 5 + 9² + 15 + 15	1,14	1,14	2,00	2,86	2,86	10,00 (2,90 - 11,50)	3,57 A			2.800 (560 - 3.780)	1.400	12,90	0,70 + 0,70 + 1,30 + 1,70	1,37	1,37	2,40	3,43		12,00 (3,40 - 14,50)	4,18 A		3,43	2.870 (580 - 4.170)	1.435	13,50
5 + 5 + 9² + 15 + 18	1,07	1,07	1,86	2,67	3,33	10,00 (2,90 - 11,50)	3,55 A			2.820 (650 - 3.630)	1.410	13,00	0,70 + 0,70 + 1,20 + 1,60	1,28	1,28	2,24	3,20		12,00 (3,40 - 14,50)	4,14 A		4,00	2.900 (690 - 4.160)	1.450	13,60
5 + 5 + 9² + 15 + 21	1,00	1,00	1,75	2,50	3,75	10,00 (2,90 - 11,50)	3,55 A			2.820 (650 - 3.630)	1.410	13,00	0,70 + 0,70 + 1,10 + 1,50	1,20	1,20	2,10	3,00		12,00 (3,40 - 14,50)	4,14 A		4,50	2.900 (690 - 4.160)	1.450	13,60
5 + 5 + 9² + 15 + 24	0,94	0,94	1,65	2,35	4,12	10,00 (2,90 - 11,50)	3,64 A			2.750 (660 - 3.640)	1.375	12,70	0,70 + 0,70 + 1,10 + 1,50	1,13	1,13	1,98	2,82		12,00 (3,40 - 14,50)	4,15 A		4,94	2.890 (700 - 4.150)	1.445	13,60
5 + 5 + 9² + 18 + 18	1,00	1,00	1,75	3,12	3,13	10,00 (2,90 - 11,50)	3,61 A			2.770 (720 - 3.580)	1.385	12,80	0,70 + 0,70 + 1,10 + 1,80	1,20	1,20	2,10	3,75		12,00 (3,40 - 14,50)	4,08 A		3,75	2.940 (800 - 4.180)	1.470	13,80
5 + 5 + 9² + 18 + 21	0,94	0,94	1,65	2,94	3,53	10,00 (2,90 - 11,50)	3,61 A			2.770 (720 - 3.580)	1.385	12,80	0,70 + 0,70 + 1,10 + 1,70	1,13	1,13	1,97	3,53		12,00 (3,40 - 14,50)	4,08 A		4,24	2.940 (800 - 4.180)	1.470	13,80
5 + 5 + 12 + 12 + 12	1,25	1,25	2,50	2,50	2,50	10,00 (2,90 - 11,50)	3,57 A			2.800 (560 - 3.780)	1.400	12,90	0,80 + 0,80 + 1,50 + 1,50	1,50	1,50	3,00	3,00		12,00 (3,40 - 14,50)	4,18 A		3,00	2.870 (590 - 4.160)	1.435	13,50
5 + 5 + 12 + 12 + 15	1,18	1,18	2,35	2,35	2,94	10,00 (2,90 - 11,50)	3,57 A			2.800 (560 - 3.780)	1.400	12,90	0,70 + 0,70 + 1,50 + 1,50	1,41	1,41	2,82	2,82		12,00 (3,40 - 14,50)	4,20 A		3,54	2.860 (590 - 4.150)	1.430	13,40
5 + 5 + 12 + 12 + 18	1,10	1,10	2,19	2,19	3,42	10,00 (2,90 - 11,50)	3,64 A			2.750 (650 - 3.640)	1.375	12,70	0,70 + 0,70 + 1,40 + 1,40	1,32	1,32	2,63	2,63		12,00 (3,40 - 14,50)	4,15 A		4,10	2.890 (700 - 4.150)	1.445	13,60
5 + 5 + 12 + 12 + 21	1,03	1,03	2,05	2,05	3,84	10,00 (2,90 - 11,50)	3,64 A			2.750 (650 - 3.640)	1.375	12,70	0,70 + 0,70 + 1,30 + 1,30	1,23	1,23	2,46	2,46		12,00 (3,40 - 14,50)	4,15 A		4,62	2.890 (700 - 4.150)	1.445	13,60
5 + 5 + 12 + 12 + 24	0,96	0,96	1,93	1,93	4,22	10,00 (2,90 - 11,50)	3,62 A			2.760 (660 - 3.640)	1.380	12,70	0,70 + 0,70 + 1,20 + 1,20	1,16	1,16	2,31	2,31		12,00 (3,40 - 14,50)	4,17 A		5,06	2.880 (720 - 4.130)	1.440	13,50
5 + 5 + 12 + 15 + 15	1,11	1,11	2,22	2,78	2,78	10,00 (2,90 - 11,50)	3,57 A			2.800 (560 - 3.700)	1.400	12,90	0,70 + 0,70 + 1,40 + 1,60	1,33	1,33	2,68	3,33		12,00 (3,40 - 14,50)	4,21 A		3,33	2.850 (600 - 4.200)	1.425	13,40
5 + 5 + 12 + 15 + 18	1,04	1,04	2,07	2,60	3,25	10,00 (2,90 - 11,50)	3,64 A			2.750 (650 - 3.640)	1.375	12,70	0,70 + 0,70 + 1,30 + 1,60	1,25	1,25	2,48	3,12		12,00 (3,40 - 14,50)	4,17 A		3,90	2.880 (720 - 4.140)	1.440	13,50
5 + 5 + 12 + 15 + 21	0,98	0,98	1,94	2,44	3,66	10,00 (2,90 - 11,50)	3,64 A			2.750 (650 - 3.640)	1.375	12,70	0,70 + 0,70 + 1,30 + 1,50	1,17	1,17	2,34	2,93		12,00 (3,40 - 14,50)	4,17 A		4,39	2.880 (720 - 4.140)	1.440	13,50
5 + 5 + 12 + 15 + 24	0,92	0,92	1,84	2,30	4,02	10,00 (2,90 - 11,50)	3,62 A			2.760 (660 - 3.640)	1.380	12,70	0,70 + 0,70 + 1,20 + 1,50	1,10	1,10	2,21	2,76		12,00 (3,40 - 14,50)	4,11 A		4,83	2.920 (730 - 4.190)	1.460	13,70
5 + 5 + 12 + 18 + 18	0,98	0,98	1,94	3,05	3,05	10,00 (2,90 - 11,50)	3,60 A			2.780 (760 - 3.580)	1.390	12,80	0,70 + 0,70 + 1,30 + 1,70	1,17	1,17	2,34	3,66		12,00 (3,40 - 14,50)	4,03 A		3,66	2.980 (830 - 4.220)	1.490	14,00
5 + 5 + 12 + 18 + 21	0,92	0,92	1,84	2,87	3,45	10,00 (2,90 - 11,50)	3,60 A			2.780 (760 - 3.580)	1.390	12,80	0,70 + 0,70 + 1,20 + 1,70	1,10	1,10	2,21	3,45		12,00 (3,40 - 14,50)	4,03 A		4,14	2.980 (830 - 4.220)	1.490	14,00
5 + 5 + 15 + 15 + 15	1,05	1,05	2,63	2,63	2,63	9,99 (2,90 - 11,50)	3,57 A			2.800 (560 - 3.700)	1.400	12,90	0,70 + 0,70 + 1,60 + 1,60	1,26	1,26	3,16	3,16		12,00 (3,40 - 14,50)	4,21 A		3,16	2.850 (620 - 4.190)	1.425	13,40
5 + 5 + 15 + 15 + 18	0,99	0,99	2,47	2,47	3,08	10,00 (2,90 - 11,50)	3,64 A			2.750 (660 - 3.640)	1.375	12,70	0,70 + 0,70 + 1,50 + 1,50	1,19	1,19	2,96	2,96		12,00 (3,40 - 14,50)	4,10 A		3,70	2.930 (720 - 4.190)	1.465	13,80
5 + 5 + 15 + 15 + 21	0,93	0,93	2,33	2,33	3,48	10,00 (2,90 - 11,50)	3,64 A			2.750 (660 - 3.640)	1.375	12,70	0,70 + 0,70 + 1,50 + 1,50	1,12	1,12	2,79	2,79		12,00 (3,40 - 14,50)	4,10 A		4,18	2.930 (720 - 4.190)	1.465	13,80
5 + 5 + 15 + 18 + 18	0,93	0,93	2,32	2,91	2,91	10,00 (2,90 - 11,50)	3,60 A			2.780 (760 - 3.580)	1.390	12,80	0,70 + 0,70 + 1,50 + 1,70	1,12	1,12	2,78	3,49		12,00 (3,40 - 14,50)	4,04 A		3,49	2.970 (850 - 4.210)	1.485	14,00
5 + 7 + 7 + 7 + 7	1,60	2,00	2,00	2,00	2,00	9,60 (2,90 - 11,50)	3,62 A			2.650 (520 - 3.860)	1.325	12,20	1,00 + 1,30 + 1,30 + 1,30	2,00	2,50	2,50	2,50		12,00 (3,40 - 14,50)	4,18 A		2,50	2.870 (530 - 4.250)	1.435	13,50
5 + 7 + 7 + 7 + 9¹	1,58	1,98	1,98	1,98	2,48	10,00 (2,90 - 11,50)	3,50 A			2.860 (520 - 3.860)	1.430	13,20	1,00 + 1,30 + 1,30 + 1,30	1,89	2,38	2,38	2,38		12,00 (3,40 - 14,50)	4,18 A		2,97	2.870 (530 - 4.250)	1.435	13,50
5 + 7 + 7 + 7 + 9²	1,54	1,92	1,92	1,92	2,70	10,00 (2,90 - 11,50)	3,50 A			2.860 (520 - 3.860)	1.430	13,20	1,00 + 1,20 + 1,20 + 1,20	1,84	2,31	2,31	2,31		12,00 (3,40 - 14,50)	4,18 A		3,23	2.870 (530 - 4.250)	1.435	13,50
5 + 7 + 7 + 7 + 12	1,48	1,85	1,85	1,85	2,97	10,00 (2,90 - 11,50)	3,48 A			2.870 (550 - 3.780)	1.435	13,20	0,90 + 1,20 + 1,20 + 1,20	1,78	2,22	2,22	2,22		12,00 (3,40 - 14,50)	4,21 A		3,56	2.850 (550 - 4.210)	1.425	13,40
5 + 7 + 7 + 7 + 15	1,38	1,72	1,72	1,72	3,46	10,00 (2,90 - 11,50)	3,58 A			2.790 (550 - 3.780)	1.395	12,90	0,90 + 1,10 + 1,10 + 1,10	1,65	2,07	2,07	2,07		12,00 (3,40 - 14,50)	4,23 A		4,14	2.840 (560 - 4.200)	1.420	13,30
5 + 7 + 7 + 7 + 18	1,26	1,59	1,59	1,59	3,97	10,00 (2,90 - 11,50)	3,56 A			2.810 (610 - 3.630)	1.405	13,00	0,80 + 1,00 + 1,00 + 1,00	1,52	1,90	1,90	1,90		12,00 (3,40 - 14,50)	4,20 A		4,78	2.860 (660 - 4.130)	1.430	13,40
5 + 7 + 7 + 7 + 21	1,18	1,47	1,47	1,47	4,41	10,00 (2,90 - 11,50)	3,56 A			2.810 (610 - 3.630)	1.405	13,00	0,70 + 0,90 + 0,90 + 0,90	1,41	1,76	1,76	1,76		12,00 (3,40 - 14,50)	4,20 A		5,31	2.860 (660 - 4.130)	1.430	13,40
5 + 7 + 7 + 7 + 24	1,10	1,37	1,37	1,37	4,79	10,00 (2,90 - 11,50)	3,64 A			2.750 (650 - 3.630)	1.375	12,70	0,70 + 0,90 + 0,90 + 0,90	1,32	1,64	1,64	1,64		12,00 (3,40 - 14,50)	4,20 A		5,76	2.860 (670 - 4.180)	1.430	13,40
5 + 7 + 7 + 9¹ + 9¹	1,50	1,89	1,89	2,36	2,36	10,00 (2,90 - 11,50)	3,50 A			2.860 (520 - 3.860)	1.430	13,20	1,00 + 1,20 + 1,20 + 1,50	1,82	2,26	2,26	2,83		12,00 (3,40 - 14,50)	4,18 A		2,83	2.870 (530 - 4.250)	1.435	13,50
5 + 7 + 7 + 9¹ + 9²	1,47	1,83	1,83	2,29	2,58	10,00 (2,90 - 11,50)	3,50 A			2.860 (520 - 3.860)	1.430	13,20	0,90 + 1,20 + 1,20 + 1,50	1,76	2,20	2,20	2,75		12,00 (3,40 - 14,50)	4,18 A		3,09	2.870 (530 - 4.250)	1.435	13,50
5 + 7 + 7 + 9¹ + 12	1,42	1,77	1,77	2,21	2,83	10,00 (2,90 - 11,50)	3,48 A			2.870 (550 - 3.780)	1.435	13,20	0,90 + 1,10 + 1,10 + 1,40	1,70	2,12	2,12	2,65		12,00 (3,40 - 14,50)	4,21 A		3,41	2.850 (550 - 4.210)	1.425	13,40
5 + 7 + 7 + 9¹ + 15	1,32	1,65	1,65	2,07	3,31	10,00 (2,90 - 11,50)	3,58 A			2.790 (550 - 3.780)	1.395	12,90	0,80 + 1,10 + 1,10 + 1,30	1,59	1,98	1,98	2,48		12,00 (3,40 - 14,50)	4,23 A		3,97	2.840 (560 - 4.200)	1.420	13,30
5 + 7 + 7 + 9¹ + 18	1,21	1,53	1,53	1,91	3,82	10,00 (2,90 - 11,50)	3,56 A			2.810 (610 - 3.630)	1.405	13,00	0,80 + 1,00 + 1,00 + 1,20	1,47	1,83	1,83	2,29		12,00 (3,40 - 14,50)	4,20 A		4,58	2.860 (660 - 4.130)	1.430	13,40
5 + 7 + 7 + 9¹ + 21	1,13	1,42	1,42	1,77	4,26	10,00 (2,90 - 11,50)	3,56 A			2.810 (610 - 3.630)	1.405	13,00	0,70 + 0,90 + 0,90 + 1,10	1,36	1,70	1,70	2,13		12,00 (3,40 - 14,50)	4,20 A		5,11	2.860 (660 - 4.130)	1.430	13,40
5 + 7 + 7 + 9¹ + 24	1,06	1,32	1,32	1,66	4,64	10,00 (2,90 - 11,50)	3,64 A			2.750 (650 - 3.630)	1.375	12,70	0,70 + 0,80 + 0,80 + 1,10	1,27	1,59	1,59	1,99		12,00 (3,40 - 14,50)	4,20 A		5,56	2.860 (670 - 4.180)	1.430	13,40
5 + 7 + 7 + 9² + 9²	1,42	1,79	1,79	2,50	2,50	10,00 (2,90 - 11,50)	3,50 A			2.860 (520 - 3.860)	1.430	13,20	0,90 + 1,20 + 1,20 + 1,50	1,72	2,14	2,14	3,00		12,00 (3,40 - 14,50)	4,18 A		3,00	2.870 (530 - 4.250)	1.435	13,50
5 + 7 + 7 + 9² + 12	1,38	1,72	1,72	2,41	2,77	10,00 (2,90 - 11,50)	3,48 A			2.870 (550 - 3.780)	1.435	13,20	0,90 + 1,10 + 1,10 + 1,50	1,65	2,07	2,07	2,90		12,00 (3,40 - 14,50)	4,21 A		3,31	2.850 (550 - 4.210)	1.425	13,40
5 + 7 + 7 + 9² + 15	1,29	1,61	1,61	2,26	3,23	10,00 (2,90 - 11,50)	3,58 A			2.790 (550 - 3.780)	1.395	12,90	0,80 + 1,00 + 1,00 + 1,50	1,54	1,94	1,94	2,71		12,00 (3,40 - 14,50)	4,23 A		3,87	2.840 (560 - 4.200)	1.420	13,30
5 + 7 + 7 + 9² + 18	1,19	1,49	1,49	2,09	3,74	10,00 (2,90 - 11,50)	3,56 A			2.810 (610 - 3.630)	1.405	13,00	0,70 + 0,90 + 0,90 + 1,40	1,43	1,79	1,79	2,51		12,00 (3,40 - 14,50)	4,20 A		4,48	2.860 (660 - 4.130)	1.430	13,40
5 + 7 + 7 + 9² + 21	1,11	1,39	1,39	1,94	4,17	10,00 (2,90 - 11,50)	3,56 A			2.810 (610 - 3.630)	1.405	13,00	0,70 + 0,90 + 0,90 + 1,30	1,33	1,67	1,67	2,33		12,00 (3,40 - 14,50)	4,20 A		5,00	2.860 (660 - 4.130)	1.430	13,40
5 + 7 + 7 + 9² + 24	1,03	1,30	1,30	1,82	4,55	10,00 (2,90 - 11,50)	3,64 A			2.750 (650 - 3.630)	1.375	12,70	0,70 + 0,80 + 0,80 + 1,20	1,25	1,56	1,56	2,18		12,00 (3,40 - 14,50)	4,20 A		5,45	2.860 (670 - 4.180)	1.430	13,40
5 + 7 + 7 + 12 + 12	1,32	1,67	1,67	2,67	2,67	10,00 (2,90 - 11,50)	3,57 A			2.800 (560 - 3.780)	1.400	12,90	0,80 + 1,10 + 1,10 + 1,60	1,60	2,00	2,00	3,20		12,00 (3,40 - 14,50)	4,24 A		3,20	2.830 (580 - 4.180)	1.415	13,30
5 + 7 + 7 + 12 + 15	1,25	1,56	1,56	2,50	3,13	10,00 (2,90 - 11,50)	3,57 A			2.800 (560 - 3.780)	1.400	12,90	0,80 + 1,00 + 1,00 + 1,50	1,49	1,88	1,88	3,00		12,00 (3,40 - 14,50)	4,18 A		3,75	2.870 (580 - 4.170)	1.435	13,50
5 + 7 + 7 + 12 + 18	1,16	1,45	1,45	2,32	3,62	10,00 (2,90 - 11,50)	3,55 A			2.820 (650 - 3.630)	1.410	13,00	0,70 + 0,90 + 0,90 + 1,50	1,39	1,74	1,74	2,78		12,00 (3,40 - 14,50)	4,14 A		4,35	2.900 (690 - 4.160)	1.450	13,60
5 + 7 + 7 + 12 + 21	1,08	1,35	1,35	2,16	4,06	10,00 (2,90 - 11,50)	3,55 A			2.820 (650 - 3.630)	1.410	13,00	0,70 + 0,90 + 0,90 + 1,40	1,30	1,62	1,62	2,59		12,00 (3,40 - 14,50)	4,14 A		4,87	2.900 (690 - 4.160)	1.450	13,60
5 + 7 + 7 + 12 + 24	1,00	1,27	1,27	2,03	4,43	10,00 (2,90 - 11,50)	3,64 A			2.750 (660 - 3.640)	1.375	12,70	0,70 + 0,80 + 0,80 + 1,30	1,21	1,52	1,52	2,43		12,00 (3,40 - 14,50)	4,15 A		5,32	2.890 (700 - 4.150)	1.445	13,60
5 + 7 + 7 + 15 + 15	1,18	1,47	1,47	2,94	2,94	10,00 (2,90 - 11,50)	3,57 A			2.800 (560 - 3.780)	1.400	12,90	0,70 + 0,90 + 0,90 + 1,70	1,42	1,76	1,76	3,53		12,00 (3,40 - 14,50)	4,20 A		3,53	2.860 (590 - 4.160)	1.430	13,40
5 + 7 + 7 + 15 + 18	1,10	1,37	1,37	2,74	3,42	10,00 (2,90 - 11,50)	3,64 A			2.750 (650 - 3.630)	1.375	12,70	0,70 + 0,90 + 0,90 + 1,60	1,32	1,64	1,64	3,29		12,00 (3,40 - 14,50)	4,15 A		4,11	2.890 (690 - 4.150)	1.445	13,60
5 + 7 + 7 + 15 + 21	1,03	1,28	1,28	2,56	3,85	10,00 (2,90 - 11,50)	3,64 A			2.750 (650 - 3.630)	1.375	12,70	0,70 + 0,80 + 0,80 + 1,60	1,22	1,54	1,54	3,08		12,00 (3,40 - 14,50)	4,15 A		4,62	2.890 (690 - 4.150)	1.445	13,60
5 + 7 + 7 + 15 + 24	0,96	1,20	1,20	2,41	4,23	10,00 (2,90 - 11,50)	3,62 A			2.760 (660 - 3.640)	1.380	12,70	0,70 + 0,70 + 0,70 + 1,50	1,15	1,45	1,45	2,89		12,00 (3,40 - 14,50)	4,17 A		5,06	2.880 (710 - 4.140)	1.440	13,50
5 + 7 + 7 + 18 + 18	1,02	1,28	1,28	3,21	3,21	10,00 (2,90 - 11,50)	3,60 A			2.780 (720 - 3.580)	1.390	12,80	0,70 + 0,80 + 0,80 + 1,80	1,22	1,54	1,54	3,85		12,00 (3,40 - 14,50)	4,03 A		3,85	2.980 (820 - 4.170)	1.490	14,00
5 + 7 + 7 + 18 + 21	0,96	1,20	1,20	3,01	3,63	10,00 (2,90 - 11,50)	3,60 A			2.780 (720 - 3.580)	1.390	12,80	0,70 + 0,70 + 0,70 + 1,70	1,15	1,45	1,45	3,61		12,00 (3,40 - 14,50)	4,03 A		4,34	2.980 (820 - 4.170)	1.490	14,00
5 + 7 + 9¹ + 9¹ + 9¹	1,44	1,81	2,25	2,25	2,25	10,00 (2,90 - 11,50)	3,50 A			2.860 (520 - 3.860)	1.430	13,20	0,90 + 1,20 + 1,50 + 1,50	1,73	2,17	2,70	2,70		12,00 (3,40 - 14,50)	4,18 A		2,70	2.870 (530 - 4.250)	1.435	13,50
5 + 7 + 9¹ + 9¹ + 9²	1,40	1,75	2,19	2,19	2,47	10,00 (2,90 - 11,50)	3,50 A			2.860 (520 - 3.860)	1.430	13,20	0,90 + 1,10 + 1,40 + 1,40	1,68	2,11	2,63	2,63		12,00 (3,40 - 14,50)	4,18 A		2,95	2.870 (530 - 4.250)	1.435	13,50
5 + 7 + 9¹ + 9¹ + 12	1,36	1,69	2,12	2,12	2,71	10,00 (2,90 - 11,50)	3,48 A			2.870 (550 - 3.780)	1.435	13,20	0,90 + 1,10 + 1,40 + 1,40	1,63	2,03	2,54	2,54		12,00 (3,40 - 14,50)	4,21 A		3,26	2.850 (550 - 4.210)	1.425	13,40
5 + 7 + 9¹ + 9¹ + 15	1,27	1,59	1,98	1,98	3,18	10,00 (2,90 - 11,50)	3,58 A			2.790 (550 - 3.780)	1.395	12,90	0,80 + 1,00 + 1,30 + 1,30	1,52	1,90	2,38	2,38		12,00 (3,40 - 14,50)	4,23 A		3,82	2.840 (560 - 4.200)	1.420	13,30
5 + 7 + 9¹ + 9¹ + 18	1,17	1,47	1,84	1,84	3,68	10,00 (2,90 - 11,50)	3,56 A			2.810 (610 - 3.630)	1.405	13,00	0,70 + 0,90 + 1,20 + 1,20	1,41	1,76	2,21	2,21		12,00 (3,40 - 14,50)	4,20 A		4,41	2.860 (660 - 4.130)	1.430	13,40
5 + 7 + 9¹ + 9¹ + 21	1,10	1,37	1,71	1,71	4,11	10,00 (2,90 - 11,50)	3,56 A			2.810 (610 - 3.630)	1.405	13,00	0,70 + 0,90 + 1,10 + 1,10	1,32	1,64	2,05	2,05		12,00 (3,40 - 14,50)	4,20 A		4,94	2.860 (660 - 4.130)	1.430	13,40
5 + 7 + 9¹ + 9¹ + 24	1,03	1,28	1,60	1,60	4,49	10,00 (2,90 - 11,50)	3,64 A			2.750 (650 - 3.630)	1.375	12,70	0,70 + 0,80 + 1,00 + 1,00	1,23	1,54	1,92	1,92		12,00 (3,40 - 14,50)	4,20 A		5,39	2.860 (670 - 4.180)	1.430	13,40
5 + 7 + 9¹ + 9² + 9²	1,37	1,71	2,14	2,39	2,39	10,00 (2,90 - 11,50)	3,50 A			2.860 (520 - 3.860)	1.430	13,20	0,90 + 1,10 + 1,40 + 1,50	1,64	2,05	2,57	2,87		12,00 (3,40 - 14,50)	4,18 A		2,87	2.870 (530 - 4.250)	1.435	13,50
5 + 7 + 9¹ + 9² + 12	1,32	1,65	2,07	2,31	2,65	10,00 (2,90 - 11,50)	3,48 A			2.870 (550 - 3.780)	1.435	13,20	0,80 + 1,10 + 1,30 + 1,50	1,59	1,98	2,48	2,78		12,00 (3,40 - 14,50)	4,21 A		3,17	2.850 (550 - 4.210)	1.425	13,40
5 + 7 + 9¹ + 9² + 15	1,24	1,55	1,94	2,17	3,10	10,00 (2,90 - 11,50)	3,58 A			2.790 (550 - 3.780)	1.395	12,90	0,80 + 1,00 + 1,30 + 1,40	1,49	1,86	2,33	2,60		12,00 (3,40 - 14,50)	4,23 A		3,72	2.840 (560 - 4.200)	1.420	13,30
5 + 7 + 9¹ + 9² + 18	1,15	1,44	1,80	2,01	3,60	10,00 (2,90 - 11,50)	3,56 A			2.810 (610 - 3.630)	1.405	13,00	0,70 + 0,90 + 1,20 + 1,30	1,37	1,73	2,16	2,42		12,00 (3,40 - 14,50)	4,20 A		4,32	2.860 (660 - 4.130)	1.430	13,40
5 + 7 + 9¹ + 9² + 21	1,07	1,34	1,68	1,88	4,03	10,00 (2,90 - 11,50)	3,56 A			2.810 (610 - 3.630)	1.405	13,00	0,70 + 0,80 + 1,10 + 1,20	1,29	1,61	2,01	2,26		12,00 (3,40 - 14,50)	4,20 A		4,83	2.860 (660 - 4.130)	1.430	13,40
5 + 7 + 9¹ + 9² + 24	1,01	1,26	1,57	1,76	4,40	10,00 (2,90 - 11,50)	3,64 A			2.750 (650 - 3.630)	1.375	12,70	0,70 + 0,80 + 1,00 + 1,10	1,21	1,51	1,89	2,11		12,00 (3,40 - 14,50)	4,20 A		5,28	2.860 (670 - 4.180)	1.430	13,40
5 + 7 + 9¹ + 12 + 12	1,28	1,60	2,00	2,56	2,56	10,00 (2,90 - 11,50)	3,57 A			2.800 (560 - 3.780)	1.400	12,90	0,80 + 1,00 + 1,30 + 1,60	1,54	1,92	2,40	3,07		12,00 (3,40 - 14,50)	4,24 A		3,07	2.830 (580 - 4.180)	1.415	13,30
5 + 7 + 9¹ + 12 + 15	1,20	1,50	1,88	2,41	3,01	10,00 (2,90 - 11,50)	3,57 A			2.800 (560 - 3.780)	1.400	12,90	0,70 + 1,00 + 1,20 + 1,50	1,44	1,80	2,26	2,89		12,00 (3,40 - 14,50)	4,18 A		3,61	2.870 (580 - 4.170)	1.435	13,50
5 + 7 + 9¹ + 12 + 18	1,11	1,40	1,75	2,24	3,50	10,00 (2,90 - 11,50)	3,55 A			2.820 (650 - 3.630)	1.410	13,00	0,70 + 0,90 + 1,10 + 1,50	1,33	1,68	2,10	2,69		12,00 (3,40 - 14,50)	4,14 A		4,20	2.900 (690 - 4.160)	1.450	13,60
5 + 7 + 9¹ + 12 + 21	1,05	1,31

Free Multi 5x1 CU-5E34PBE. Minimum capacity connected: 4,5 kW. Maximum capacity connected: 17,5 kW

Indoor unit capacity	Cooling capacity (kW) Rooms						EER	SEER	Pdesign	Input power rating	A.E.C.	Current	Moisture removal	Heating capacity (kW) Rooms						COP	SCOP	Pdesign at -10°C	Input power rating	A.E.C.	Current
	A	B	C	D	E	Total (Min - Max)	W/W	W/W	kWh	W	kWh	230V (A)	Volume (l/h)	A	B	C	D	E	Total (Min - Max)	W/W	W/W	kWh	W	kWh	230V (A)
5 Rooms																									
5 + 7 + 15 + 15 + 15	1,03	1,29	2,56	2,56	2,56	10,00 (2,90 - 11,50)	3,57 A			2.800 (600 - 3.700)	1.400	12,90	0,70 + 0,80 + 1,60 + 1,60	1,22	1,54	3,08	3,08		12,00 (3,40 - 14,50)	4,23 A		3,08	2.840 (620 - 4.180)	1.420	13,30
5 + 7 + 15 + 15 + 18	0,96	1,20	2,41	2,41	3,02	10,00 (2,90 - 11,50)	3,62 A			2.760 (660 - 3.640)	1.380	12,70	0,70 + 0,70 + 1,50 + 1,50	1,16	1,45	2,89	2,89		12,00 (3,40 - 14,50)	4,11 A		3,61	2.920 (730 - 4.180)	1.460	13,70
5 + 9¹ + 9¹ + 9¹ + 9¹	1,36	2,16	2,16	2,16	2,16	10,00 (2,90 - 11,50)	3,50 A			2.860 (520 - 3.860)	1.430	13,20	0,90 + 1,40 + 1,40 + 1,40	1,64	2,59	2,59	2,59		12,00 (3,40 - 14,50)	4,18 A		2,59	2.870 (530 - 4.250)	1.435	13,50
5 + 9¹ + 9¹ + 9¹ + 9²	1,34	2,10	2,10	2,10	2,36	10,00 (2,90 - 11,50)	3,50 A			2.860 (520 - 3.860)	1.430	13,20	0,80 + 1,40 + 1,40 + 1,40	1,61	2,52	2,52	2,52		12,00 (3,40 - 14,50)	4,18 A		2,83	2.870 (530 - 4.250)	1.435	13,50
5 + 9¹ + 9¹ + 9¹ + 12	1,30	2,03	2,03	2,03	2,61	10,00 (2,90 - 11,50)	3,48 A			2.870 (550 - 3.780)	1.435	13,20	0,80 + 1,30 + 1,30 + 1,30	1,56	2,44	2,44	2,44		12,00 (3,40 - 14,50)	4,21 A		3,12	2.850 (550 - 4.210)	1.425	13,40
5 + 9¹ + 9¹ + 9¹ + 15	1,22	1,91	1,91	1,91	3,05	10,00 (2,90 - 11,50)	3,58 A			2.790 (550 - 3.780)	1.395	12,90	0,80 + 1,20 + 1,20 + 1,20	1,47	2,29	2,29	2,29		12,00 (3,40 - 14,50)	4,23 A		3,66	2.840 (560 - 4.200)	1.420	13,30
5 + 9¹ + 9¹ + 9¹ + 18	1,13	1,77	1,77	1,77	3,56	10,00 (2,90 - 11,50)	3,56 A			2.810 (610 - 3.630)	1.405	13,00	0,70 + 1,10 + 1,10 + 1,10	1,35	2,13	2,13	2,13		12,00 (3,40 - 14,50)	4,20 A		4,26	2.860 (660 - 4.130)	1.430	13,40
5 + 9¹ + 9¹ + 9¹ + 21	1,05	1,66	1,66	1,66	3,97	10,00 (2,90 - 11,50)	3,56 A			2.810 (610 - 3.630)	1.405	13,00	0,70 + 1,10 + 1,10 + 1,10	1,26	1,99	1,99	1,99		12,00 (3,40 - 14,50)	4,20 A		4,77	2.860 (660 - 4.130)	1.430	13,40
5 + 9¹ + 9¹ + 9¹ + 24	0,99	1,55	1,55	1,55	4,36	10,00 (2,90 - 11,50)	3,64 A			2.750 (650 - 3.630)	1.375	12,70	0,70 + 1,00 + 1,00 + 1,00	1,19	1,86	1,86	1,86		12,00 (3,40 - 14,50)	4,20 A		5,23	2.860 (670 - 4.180)	1.430	13,40
5 + 9¹ + 9¹ + 9² + 9²	1,30	2,05	2,05	2,30	2,30	10,00 (2,90 - 11,50)	3,50 A			2.860 (520 - 3.860)	1.430	13,20	0,80 + 1,30 + 1,30 + 1,50	1,58	2,46	2,46	2,75		12,00 (3,40 - 14,50)	4,18 A		2,75	2.870 (530 - 4.250)	1.435	13,50
5 + 9¹ + 9¹ + 9² + 12	1,27	1,98	1,98	2,22	2,55	10,00 (2,90 - 11,50)	3,48 A			2.870 (550 - 3.780)	1.435	13,20	0,80 + 1,30 + 1,30 + 1,40	1,52	2,38	2,38	2,67		12,00 (3,40 - 14,50)	4,21 A		3,05	2.850 (550 - 4.210)	1.425	13,40
5 + 9¹ + 9¹ + 9² + 15	1,18	1,87	1,87	2,09	2,99	10,00 (2,90 - 11,50)	3,58 A			2.790 (550 - 3.780)	1.395	12,90	0,70 + 1,20 + 1,20 + 1,40	1,43	2,24	2,24	2,51		12,00 (3,40 - 14,50)	4,23 A		3,58	2.840 (560 - 4.200)	1.420	13,30
5 + 9¹ + 9¹ + 9² + 18	1,11	1,74	1,74	1,94	3,47	10,00 (2,90 - 11,50)	3,56 A			2.810 (610 - 3.630)	1.405	13,00	0,70 + 1,10 + 1,10 + 1,30	1,33	2,08	2,08	2,33		12,00 (3,40 - 14,50)	4,20 A		4,18	2.860 (660 - 4.130)	1.430	13,40
5 + 9¹ + 9¹ + 9² + 21	1,04	1,62	1,62	1,82	3,90	10,00 (2,90 - 11,50)	3,56 A			2.810 (610 - 3.630)	1.405	13,00	0,70 + 1,00 + 1,00 + 1,20	1,24	1,95	1,95	2,18		12,00 (3,40 - 14,50)	4,20 A		4,68	2.860 (660 - 4.130)	1.430	13,40
5 + 9¹ + 9¹ + 9² + 24	0,98	1,52	1,52	1,71	4,27	10,00 (2,90 - 11,50)	3,64 A			2.750 (650 - 3.630)	1.375	12,70	0,70 + 1,00 + 1,00 + 1,10	1,17	1,83	1,83	2,05		12,00 (3,40 - 14,50)	4,20 A		5,12	2.860 (670 - 4.180)	1.430	13,40
5 + 9¹ + 9¹ + 12 + 12	1,24	1,92	1,92	2,46	2,46	10,00 (2,90 - 11,50)	3,57 A			2.800 (560 - 3.780)	1.400	12,90	0,80 + 1,20 + 1,20 + 1,50	1,48	2,31	2,31	2,95		12,00 (3,40 - 14,50)	4,24 A		2,95	2.830 (580 - 4.180)	1.415	13,30
5 + 9¹ + 9¹ + 12 + 15	1,16	1,81	1,81	2,32	2,90	10,00 (2,90 - 11,50)	3,57 A			2.800 (560 - 3.780)	1.400	12,90	0,70 + 1,20 + 1,20 + 1,50	1,39	2,17	2,17	2,78		12,00 (3,40 - 14,50)	4,18 A		3,49	2.870 (580 - 4.170)	1.435	13,50
5 + 9¹ + 9¹ + 12 + 18	1,08	1,69	1,69	2,16	3,38	10,00 (2,90 - 11,50)	3,55 A			2.820 (650 - 3.630)	1.410	13,00	0,70 + 1,10 + 1,10 + 1,40	1,30	2,03	2,03	2,59		12,00 (3,40 - 14,50)	4,14 A		4,05	2.900 (690 - 4.160)	1.450	13,60
5 + 9¹ + 9¹ + 12 + 21	1,01	1,58	1,58	2,03	3,80	10,00 (2,90 - 11,50)	3,55 A			2.820 (650 - 3.630)	1.410	13,00	0,70 + 1,00 + 1,00 + 1,30	1,21	1,90	1,90	2,43		12,00 (3,40 - 14,50)	4,14 A		4,56	2.900 (690 - 4.160)	1.450	13,60
5 + 9¹ + 9¹ + 12 + 24	0,95	1,49	1,49	1,90	4,17	10,00 (2,90 - 11,50)	3,64 A			2.750 (660 - 3.640)	1.375	12,70	0,70 + 0,90 + 0,90 + 1,20	1,13	1,79	1,79	2,29		12,00 (3,40 - 14,50)	4,15 A		5,00	2.890 (700 - 4.150)	1.445	13,60
5 + 9¹ + 9¹ + 15 + 15	1,10	1,71	1,71	2,74	2,74	10,00 (2,90 - 11,50)	3,57 A			2.800 (560 - 3.780)	1.400	12,90	0,70 + 1,10 + 1,10 + 1,60	1,32	2,05	2,05	3,29		12,00 (3,40 - 14,50)	4,20 A		3,29	2.860 (590 - 4.160)	1.430	13,40
5 + 9¹ + 9¹ + 15 + 18	1,03	1,60	1,60	2,56	3,21	10,00 (2,90 - 11,50)	3,64 A			2.750 (650 - 3.630)	1.375	12,70	0,70 + 1,00 + 1,00 + 1,60	1,23	1,92	1,92	3,08		12,00 (3,40 - 14,50)	4,15 A		3,85	2.890 (690 - 4.150)	1.445	13,60
5 + 9¹ + 9¹ + 15 + 21	0,96	1,51	1,51	2,41	3,61	10,00 (2,90 - 11,50)	3,64 A			2.750 (650 - 3.630)	1.375	12,70	0,70 + 1,00 + 1,00 + 1,50	1,15	1,81	1,81	2,89		12,00 (3,40 - 14,50)	4,15 A		4,34	2.890 (690 - 4.150)	1.445	13,60
5 + 9¹ + 9¹ + 18 + 18	0,96	1,51	1,51	3,01	3,01	10,00 (2,90 - 11,50)	3,60 A			2.780 (720 - 3.580)	1.390	12,80	0,70 + 1,00 + 1,00 + 1,70	1,16	1,81	1,81	3,61		12,00 (3,40 - 14,50)	4,03 A		3,61	2.980 (820 - 4.170)	1.490	14,00
5 + 9¹ + 9² + 9² + 9²	1,28	2,00	2,24	2,24	2,24	10,00 (2,90 - 11,50)	3,50 A			2.860 (520 - 3.860)	1.430	13,20	0,80 + 1,30 + 1,50 + 1,50	1,53	2,40	2,69	2,69		12,00 (3,40 - 14,50)	4,18 A		2,69	2.870 (530 - 4.250)	1.435	13,50
5 + 9¹ + 9² + 9² + 12	1,24	1,94	2,17	2,17	2,48	10,00 (2,90 - 11,50)	3,48 A			2.870 (550 - 3.780)	1.435	13,20	0,80 + 1,30 + 1,40 + 1,40	1,49	2,33	2,60	2,60		12,00 (3,40 - 14,50)	4,21 A		2,98	2.850 (550 - 4.210)	1.425	13,40
5 + 9¹ + 9² + 9² + 15	1,17	1,82	2,04	2,04	2,93	10,00 (2,90 - 11,50)	3,58 A			2.790 (550 - 3.780)	1.395	12,90	0,70 + 1,20 + 1,30 + 1,30	1,40	2,19	2,45	2,45		12,00 (3,40 - 14,50)	4,23 A		3,51	2.840 (560 - 4.200)	1.420	13,30
5 + 9¹ + 9² + 9² + 18	1,09	1,70	1,90	1,90	3,41	10,00 (2,90 - 11,50)	3,56 A			2.810 (610 - 3.630)	1.405	13,00	0,70 + 1,10 + 1,20 + 1,20	1,30	2,04	2,29	2,29		12,00 (3,40 - 14,50)	4,20 A		4,08	2.860 (660 - 4.130)	1.430	13,40
5 + 9¹ + 9² + 9² + 21	1,02	1,59	1,78	1,78	3,83	10,00 (2,90 - 11,50)	3,56 A			2.810 (610 - 3.630)	1.405	13,00	0,70 + 1,00 + 1,10 + 1,10	1,22	1,91	2,14	2,14		12,00 (3,40 - 14,50)	4,20 A		4,59	2.860 (660 - 4.130)	1.430	13,40
5 + 9¹ + 9² + 9² + 24	0,95	1,50	1,68	1,68	4,19	10,00 (2,90 - 11,50)	3,64 A			2.750 (650 - 3.630)	1.375	12,70	0,70 + 1,00 + 1,10 + 1,10	1,15	1,80	2,01	2,01		12,00 (3,40 - 14,50)	4,20 A		5,03	2.860 (670 - 4.180)	1.430	13,40
5 + 9¹ + 9² + 12 + 12	1,19	1,88	2,11	2,41	2,41	10,00 (2,90 - 11,50)	3,57 A			2.800 (560 - 3.780)	1.400	12,90	0,70 + 1,20 + 1,40 + 1,50	1,43	2,26	2,53	2,89		12,00 (3,40 - 14,50)	4,24 A		2,89	2.830 (580 - 4.180)	1.415	13,30
5 + 9¹ + 9² + 12 + 15	1,13	1,77	1,99	2,27	2,84	10,00 (2,90 - 11,50)	3,57 A			2.800 (560 - 3.780)	1.400	12,90	0,70 + 1,10 + 1,30 + 1,50	1,36	2,13	2,38	2,72		12,00 (3,40 - 14,50)	4,18 A		3,41	2.870 (580 - 4.170)	1.435	13,50
5 + 9¹ + 9² + 12 + 18	1,06	1,66	1,85	2,12	3,31	10,00 (2,90 - 11,50)	3,55 A			2.820 (650 - 3.630)	1.410	13,00	0,70 + 1,10 + 1,20 + 1,40	1,27	1,99	2,23	2,54		12,00 (3,40 - 14,50)	4,14 A		3,97	2.900 (690 - 4.160)	1.450	13,60
5 + 9¹ + 9² + 12 + 21	0,99	1,55	1,74	1,99	3,73	10,00 (2,90 - 11,50)	3,55 A			2.820 (650 - 3.630)	1.410	13,00	0,70 + 1,00 + 1,10 + 1,30	1,19	1,86	2,09	2,39		12,00 (3,40 - 14,50)	4,14 A		4,47	2.900 (690 - 4.160)	1.450	13,60
5 + 9¹ + 9² + 12 + 24	0,94	1,46	1,64	1,87	4,09	10,00 (2,90 - 11,50)	3,64 A			2.750 (660 - 3.640)	1.375	12,70	0,70 + 0,90 + 1,00 + 1,20	1,12	1,75	1,96	2,25		12,00 (3,40 - 14,50)	4,15 A		4,92	2.890 (700 - 4.150)	1.445	13,60
5 + 9¹ + 9² + 15 + 15	1,07	1,68	1,89	2,68	2,68	10,00 (2,90 - 11,50)	3,57 A			2.800 (560 - 3.780)	1.400	12,90	0,70 + 1,10 + 1,20 + 1,60	1,29	2,01	2,26	3,22		12,00 (3,40 - 14,50)	4,20 A		3,22	2.860 (590 - 4.160)	1.430	13,40
5 + 9¹ + 9² + 15 + 18	1,01	1,57	1,76	2,52	3,14	10,00 (2,90 - 11,50)	3,64 A			2.750 (650 - 3.630)	1.375	12,70	0,70 + 1,00 + 1,10 + 1,50	1,21	1,89	2,11	3,02		12,00 (3,40 - 14,50)	4,15 A		3,77	2.890 (690 - 4.150)	1.445	13,60
5 + 9¹ + 9² + 15 + 21	0,94	1,48	1,66	2,37	3,55	10,00 (2,90 - 11,50)	3,64 A			2.750 (650 - 3.630)	1.375	12,70	0,70 + 0,90 + 1,10 + 1,50	1,13	1,78	1,99	2,84		12,00 (3,40 - 14,50)	4,15 A		4,26	2.890 (690 - 4.150)	1.445	13,60
5 + 9¹ + 9² + 18 + 18	0,94	1,48	1,66	2,96	2,96	10,00 (2,90 - 11,50)	3,60 A			2.780 (720 - 3.580)	1.390	12,80	0,70 + 0,90 + 1,10 + 1,70	1,13	1,78	1,99	3,55		12,00 (3,40 - 14,50)	4,03 A		3,55	2.980 (820 - 4.170)	1.490	14,00
5 + 9¹ + 12 + 12 + 12	1,16	1,82	2,34	2,34	2,34	10,00 (2,90 - 11,50)	3,57 A			2.800 (560 - 3.700)	1.400	12,90	0,70 + 1,20 + 1,50 + 1,50	1,40	2,20	2,80	2,80		12,00 (3,40 - 14,50)	4,20 A		2,80	2.860 (590 - 4.150)	1.430	13,40
5 + 9¹ + 12 + 12 + 15	1,10	1,72	2,21	2,21	2,76	10,00 (2,90 - 11,50)	3,57 A			2.800 (560 - 3.700)	1.400	12,90	0,70 + 1,10 + 1,40 + 1,40	1,32	2,07	2,65	2,65		12,00 (3,40 - 14,50)	4,21 A		3,31	2.850 (600 - 4.200)	1.425	13,40
5 + 9¹ + 12 + 12 + 18	1,03	1,61	2,06	2,06	3,24	10,00 (2,90 - 11,50)	3,64 A			2.750 (660 - 3.640)	1.375	12,70	0,70 + 1,00 + 1,30 + 1,30	1,23	1,94	2,48	2,48		12,00 (3,40 - 14,50)	4,17 A		3,87	2.880 (720 - 4.140)	1.440	13,50
5 + 9¹ + 12 + 12 + 21	0,96	1,52	1,94	1,94	3,64	10,00 (2,90 - 11,50)	3,64 A			2.750 (660 - 3.640)	1.375	12,70	0,70 + 1,00 + 1,30 + 1,30	1,16	1,82	2,33	2,33		12,00 (3,40 - 14,50)	4,17 A		4,36	2.880 (720 - 4.140)	1.440	13,50
5 + 9¹ + 12 + 12 + 24	0,91	1,43	1,83	1,83	4,00	10,00 (2,90 - 11,50)	3,62 A			2.760 (670 - 3.640)	1.380	12,70	0,70 + 0,90 + 1,20 + 1,20	1,10	1,71	2,19	2,19		12,00 (3,40 - 14,50)	4,11 A		4,81	2.920 (730 - 4.190)	1.460	13,70
5 + 9¹ + 12 + 15 + 15	1,05	1,63	2,10	2,61	2,61	10,00 (2,90 - 11,50)	3,57 A			2.800 (570 - 3.700)	1.400	12,90	0,70 + 1,00 + 1,40 + 1,60	1,25	1,96	2,51	3,14		12,00 (3,40 - 14,50)	4,21 A		3,14	2.850 (620 - 4.190)	1.425	13,40
5 + 9¹ + 12 + 15 + 18	0,98	1,53	1,96	2,45	3,08	10,00 (2,90 - 11,50)	3,64 A			2.750 (660 - 3.640)	1.375	12,70	0,70 + 1,00 + 1,30 + 1,50	1,18	1,84	2,36	2,94		12,00 (3,40 - 14,50)	4,10 A		3,68	2.930 (720 - 4.190)	1.465	13,80
5 + 9¹ + 12 + 15 + 21	0,92	1,45	1,85	2,31	3,47	10,00 (2,90 - 11,50)	3,64 A			2.750 (660 - 3.640)	1.375	12,70	0,70 + 0,90 + 1,20 + 1,50	1,11	1,73	2,22	2,77		12,00 (3,40 - 14,50)	4,10 A		4,17	2.930 (720 - 4.190)	1.465	13,80
5 + 9¹ + 12 + 18 + 18	0,92	1,45	1,85	2,89	2,89	10,00 (2,90 - 11,50)	3,60 A			2.780 (760 - 3.580)	1.390	12,80	0,70 + 0,90 + 1,20 + 1,70	1,11	1,73	2,22	3,47		12,00 (3,40 - 14,50)	4,04 A		3,47	2.970 (850 - 4.210)	1.485	14,00
5 + 9¹ + 15 + 15 + 15	0,99	1,57	2,48	2,48	2,48	10,00 (2,90 - 11,50)	3,57 A			2.800 (600 - 3.700)	1.400	12,90	0,70 + 1,00 + 1,50 + 1,50	1,19	1,87	2,98	2,98		12,00 (3,40 - 14,50)	4,23 A		2,98	2.840 (620 - 4.180)	1.420	13,30
5 + 9¹ + 15 + 15 + 18	0,94	1,46	2,34	2,34	2,92	10,00 (2,90 - 11,50)	3,62 A			2.760 (660 - 3.640)	1.380	12,70	0,70 + 0,90 + 1,50 + 1,50	1,12	1,75	2,81	2,81		12,00 (3,40 - 14,50)	4,11 A		3,51	2.920 (730 - 4.180)	1.460	13,70
5 + 9² + 9² + 9² + 9²	1,24	2,19	2,19	2,19	2,19	10,00 (2,90 - 11,50)	3,50 A			2.860 (520 - 3.860)	1.430	13,20	0,80 + 1,40 + 1,40 + 1,40	1,48	2,63	2,63	2,63		12,00 (3,40 - 14,50)	4,18 A		2,63	2.870 (530 - 4.250)	1.435	13,50
5 + 9² + 9² + 9² + 12	1,21	2,12	2,12	2,12	2,43	10,00 (2,90 - 11,50)	3,48 A			2.870 (550 - 3.780)	1.435	13,20	0,80 + 1,40 + 1,40 + 1,40	1,44	2,55	2,55	2,55		12,00 (3,40 - 14,50)	4,21 A		2,91	2.850 (550 - 4.210)	1.425	13,40
5 + 9² + 9² + 9² + 15	1,14	2,00	2,00	2,00	2,86	10,00 (2,90 - 11,50)	3,58 A			2.790 (550 - 3.780)	1.395	12,90	0,70 + 1,30 + 1,30 + 1,30	1,37	2,40	2,40	2,40		12,00 (3,40 - 14,50)	4,23 A		3,43	2.840 (560 - 4.200)	1.420	13,30
5 + 9² + 9² + 9² + 18	1,06	1,87	1,87	1,87	3,33	10,00 (2,90 - 11,50)	3,56 A			2.810 (610 - 3.630)	1.405	13,00	0,70 + 1,20 + 1,20 + 1,20	1,28	2,24	2,24	2,24		12,00 (3,40 - 14,50)	4,20 A		4,00	2.860 (660 - 4.130)	1.430	13,40
5 + 9² + 9² + 9² + 21	1,00	1,75	1,75	1,75	3,75	10,00 (2,90 - 11,50)	3,56 A			2.810 (610 - 3.630)	1.405	13,00	0,70 + 1,10 + 1,10 + 1,10	1,20	2,10	2,10	2,10		12,00 (3,40 - 14,50)	4,20 A		4,50	2.860 (660 - 4.130)	1.430	13,40
5 + 9² + 9² + 9² + 24	0,93	1,65	1,65	1,65	4,12	10,00 (2,90 - 11,50)	3,64 A			2.750 (650 - 3.630)	1.375	12,70	0,70 + 1,10 + 1,10 + 1,10	1,12	1,98	1,98	1,98		12,00 (3,40 - 14,50)	4,20 A		4,94	2.860 (670 - 4.180)	1.430	13,40
5 + 9² + 9² + 12 + 12	1,18	2,06	2,06	2,35	2,35	10,00 (2,90 - 11,50)	3,57 A			2.800 (560 - 3.780)	1.400	12,90	0,70 + 1,30 + 1,30 + 1,50	1,42	2,47	2,47	2,82		12,00 (3,40 - 14,50)	4,24 A		2,82	2.830 (580 - 4.180)	1.415	13,30
5 + 9² + 9² + 12 + 15	1,11	1,94	1,94	2,22	2,79	10,00 (2,90 - 11,50)	3,57 A			2.800 (560 - 3.780)	1.400	12,90	0,70 + 1,30 + 1,30 + 1,40	1,33	2,33	2,33	2,67		12,00 (3,40 - 14,50)	4,18 A		3,34	2.870 (580 - 4.170)	1.435	13,50
5 + 9² + 9² + 12 + 18	1,03	1,82	1,82	2,08	3,25	10,00 (2,90 - 11,50)	3,55 A			2.820 (650 - 3.630)	1.410	13,00	0,70 + 1,20 + 1,20 + 1,30	1,25	2,18	2,18	2,49		12,00 (3,40 - 14,50)	4,14 A		3,90	2.900 (690 - 4.160)	1.450	13,60
5 + 9² + 9² + 12 + 21	0,97	1,71	1,71	1,95	3,66	10,00 (2,90 - 11,50)	3,55 A			2.820 (650 - 3.630)	1.410	13,00	0,70 + 1,10 + 1,10 + 1,30	1,17	2,05	2,05	2,34		12,00 (3,40 - 14,50)	4,14 A		4,39	2.900 (690 - 4.160)	1.450	13,60
5 + 9² + 9² + 12 + 24	0,92	1,61	1,61	1,84	4,02	10,00 (2,90 - 11,50)	3,64 A			2.750 (660 - 3.640)	1.375	12,70	0,70 + 1,00 + 1,00 + 1,20	1,10	1,93	1,93	2,21		12,00 (3,40 - 14,50)	4,15 A		4,83	2.890 (700 - 4.150)	1.445	13,60
5 + 9² + 9² + 15 + 15	1,06	1,84	1,84	2,63	2,63	10,00 (2,90 - 11,50)	3,57 A			2.800 (560 - 3.780)	1.400	12,90	0,70 + 1,20 + 1,20 + 1,60	1,26	2,21	2,21	3,16		12,00 (3,40 - 14,50)	4,20 A		3,16	2.860 (590 - 4.160)	1.430	13,40
5 + 9² + 9² + 15 + 18	0,98	1,73	1,73	2,47	3,09	10,00 (2,90 - 11,50)	3,64 A			2.750 (650 - 3.630)	1.375	12,70	0,70 + 1,10 + 1,10 + 1,50	1,19	2,07	2,07	2,96		12,00 (3,40 - 14,50)	4,15 A		3,71	2.890 (690 - 4.150)	1.445	13,60
5 + 9² + 9² + 15 + 21	0,92	1,63	1,63	2,33	3,49	10,00 (2,90 - 11,50)	3,64 A			2.750 (650 - 3.630)	1.375	12,70	0,70 + 1,00 + 1,00 + 1,50	1,12	1,95	1,95	2,79		12,00 (3,40 - 14,50)	4,15 A		4,19	2.890 (690 - 4.150)	1.445	13,60
5 + 9² + 9² + 18 + 18	0,92	1,63	1,63	2,91	2,91	10,00 (2,90 - 11,50)	3,60 A			2.780 (720 - 3.580)	1.390	12,80	0,70 + 1,00 + 1,00 + 1,70	1,12	1,95	1,95	3,49		12,00 (3,40 - 14,50)	4,03 A		3,49	2.980 (820 - 4.170)	1.490	14,00
5 + 9² + 12 + 12 + 12	1,13	2,00	2,29	2,29	2,29	10,00 (2,90 - 11,50)	3,57 A			2.800 (560 - 3.700)	1.400	12,90	0,70 + 1,30 + 1,50 + 1,50	1,37	2,41	2,74	2,74		12,00 (3,40 - 14,50)	4,20 A		2,74	2.860 (590 - 4.150)	1.430	13,40
5 + 9² + 12 + 12 + 15	1,08	1,89	2,16	2,16	2,71	10,00 (2,90 - 11,50)	3,57 A			2.800 (560 - 3.700)	1.400	12,90	0,70 + 1,20 + 1,40 + 1,40	1,30	2,27	2,59	2,59		12,00 (3,40 - 14,50)	4,21 A		3,25	2.850 (600 - 4.200)	1.425	13,40
5 + 9² + 12 + 12 + 18	1,01	1,77	2,03	2,03	3,16	10,00 (2,90 - 11,50)	3,64 A			2.750 (660 - 3.640)	1.375	12,70	0,70 + 1,10 + 1,30 + 1,30	1,21	2,13	2,43	2,43		12,00 (3,40 - 14,50)	4,17 A		3,80	2.880 (720 - 4.140)	1.440	13,50
5 + 9² + 12 + 12 + 21	0,95	1,67	1,90	1,90	3,58	10,00 (2,90 - 11,50)	3,64 A			2.750 (660 - 3.640)	1.375	12,70	0,70 + 1,10 + 1,20 + 1,20	1,13	2,00	2,29	2,29		12,00 (3,40 - 14,50)	4,17 A		4,29	2.880 (720 - 4.140)	1.440	13,50
5 + 9² + 12 + 15 + 15	1,03	1,79	2,06	2,56	2,56	10,00 (2,90 - 11,50)	3,57 A			2.800 (570 - 3.700)	1.400	12,90	0,70 + 1,20 + 1,30 + 1,60	1,23	2,15	2,46	3,08		12,00 (3,40 - 14,50)	4,21 A		3,08	2.850 (620 - 4.190)	1.425	13,40
5 + 9² + 12 + 15 + 18	0,96	1,69	1,93	2,41	3,01	10,00 (2,90 - 11,50)	3,64 A			2.750 (660 - 3.640)	1.375	12,70	0,70 + 1,10 + 1,20 + 1,50	1,16	2,02	2,31	2,89		12,00 (3,40 - 14,50)	4,10 A		3,62	2.930 (720 - 4.190)	1.465	13,80
5 + 9² + 15 + 15 + 15	0,97	1,71	2,44	2,44	2,44	10,00 (2,90 - 11,50)	3,57 A			2.800 (600 - 3.700)	1.400	12,90	0,70 + 1,10 + 1,50 + 1,50	1,16	2,05	2,93	2,93		12,00 (3,40 - 14,50)	4,23 A		2,93	2.840 (620 - 4.180)	1.420	13,30
5 + 9² + 15 + 15 + 18	0,92	1,61	2,30	2,30	2,87	10,00 (2,90 - 11,50)	3,62 A			2.760 (660 - 3.640)	1.380	12,70	0,70 + 1,00 + 1,50 + 1,50	1,10	1,93	2,76	2,76		12,00 (3,40 -

Free Multi combinations table

Free Multi 5x1 CU-5E34PBE. Minimum capacity connected: 4,5 kW. Maximum capacity connected: 17,5 kW

Indoor unit capacity	Cooling capacity (kW) Rooms						EER	SEER	Pdesign	Input power rating	A.E.C.	Current	Moisture removal	Heating capacity (kW) Rooms						COP	SCOP	Pdesign at -10°C	Input power rating	A.E.C.	Current
	A	B	C	D	E	Total (Min - Max)	W/W	W/W	kWh	W	kWh	230V (A)	Volume (l/h)	A	B	C	D	E	Total (Min - Max)	W/W	W/W	kWh	W	kWh	230V (A)
5 Rooms																									
7 + 7 + 7 + 15 + 18	1,33	1,33	1,33	2,67	3,34	10,00 (2,90 - 11,50)	3,64 A			2.750 (650 - 3.640)	1.375	12,70	0,80 + 0,80 + 0,80 + 1,60	1,60	1,60	1,60	3,20		12,00 (3,40 - 14,50)	4,15 A		4,00	2.890 (700 - 4.140)	1.445	13,60
7 + 7 + 7 + 15 + 21	1,25	1,25	1,25	2,50	3,75	10,00 (2,90 - 11,50)	3,64 A			2.750 (650 - 3.640)	1.375	12,70	0,80 + 0,80 + 0,80 + 1,50	1,50	1,50	1,50	3,00		12,00 (3,40 - 14,50)	4,15 A		4,50	2.890 (700 - 4.140)	1.445	13,60
7 + 7 + 7 + 15 + 24	1,18	1,18	1,18	2,34	4,12	10,00 (2,90 - 11,50)	3,62 A			2.760 (660 - 3.640)	1.380	12,70	0,70 + 0,70 + 0,70 + 1,50	1,41	1,41	1,41	2,82		12,00 (3,40 - 14,50)	4,17 A		4,95	2.880 (720 - 4.190)	1.440	13,50
7 + 7 + 7 + 18 + 18	1,24	1,24	1,24	3,14	3,14	10,00 (2,90 - 11,50)	3,60 A			2.780 (750 - 3.580)	1.390	12,80	0,80 + 0,80 + 0,80 + 1,80	1,50	1,50	1,50	3,75		12,00 (3,40 - 14,50)	4,03 A		3,75	2.980 (830 - 4.220)	1.490	14,00
7 + 7 + 7 + 18 + 21	1,18	1,18	1,18	2,93	3,53	10,00 (2,90 - 11,50)	3,60 A			2.780 (750 - 3.580)	1.390	12,80	0,70 + 0,70 + 0,70 + 1,70	1,41	1,41	1,41	3,53		12,00 (3,40 - 14,50)	4,03 A		4,24	2.980 (830 - 4.220)	1.490	14,00
7 + 7 + 9¹ + 9¹ + 9¹	1,73	1,73	2,18	2,18	2,18	10,00 (2,90 - 11,50)	3,50 A			2.860 (550 - 3.860)	1.430	13,20	1,10 + 1,10 + 1,40 + 1,40	2,10	2,10	2,60	2,60		12,00 (3,40 - 14,50)	4,20 A		2,60	2.860 (530 - 4.240)	1.430	13,40
7 + 7 + 9¹ + 9¹ + 9²	1,69	1,69	2,12	2,12	2,38	10,00 (2,90 - 11,50)	3,50 A			2.860 (550 - 3.860)	1.430	13,20	1,10 + 1,10 + 1,40 + 1,40	2,03	2,03	2,54	2,54		12,00 (3,40 - 14,50)	4,20 A		2,86	2.860 (530 - 4.240)	1.430	13,40
7 + 7 + 9¹ + 9¹ + 12	1,64	1,64	2,05	2,05	2,62	10,00 (2,90 - 11,50)	3,57 A			2.800 (550 - 3.780)	1.400	12,90	1,00 + 1,00 + 1,30 + 1,30	1,97	1,97	2,46	2,46		12,00 (3,40 - 14,50)	4,23 A		3,14	2.840 (560 - 4.200)	1.420	13,30
7 + 7 + 9¹ + 9¹ + 15	1,54	1,54	1,92	1,92	3,08	10,00 (2,90 - 11,50)	3,57 A			2.800 (550 - 3.780)	1.400	12,90	1,00 + 1,00 + 1,20 + 1,20	1,85	1,85	2,31	2,31		12,00 (3,40 - 14,50)	4,24 A		3,68	2.830 (560 - 4.190)	1.415	13,30
7 + 7 + 9¹ + 9¹ + 18	1,43	1,43	1,79	1,79	3,56	10,00 (2,90 - 11,50)	3,56 A			2.810 (610 - 3.630)	1.405	13,00	0,90 + 0,90 + 1,20 + 1,20	1,71	1,71	2,14	2,14		12,00 (3,40 - 14,50)	4,20 A		4,30	2.860 (670 - 4.180)	1.430	13,40
7 + 7 + 9¹ + 9¹ + 21	1,33	1,33	1,67	1,67	4,00	10,00 (2,90 - 11,50)	3,56 A			2.810 (610 - 3.630)	1.405	13,00	0,80 + 0,80 + 1,10 + 1,10	1,60	1,60	2,00	2,00		12,00 (3,40 - 14,50)	4,20 A		4,80	2.860 (670 - 4.180)	1.430	13,40
7 + 7 + 9¹ + 9¹ + 24	1,25	1,25	1,56	1,56	4,38	10,00 (2,90 - 11,50)	3,64 A			2.750 (650 - 3.640)	1.375	12,70	0,80 + 0,80 + 1,00 + 1,00	1,50	1,50	1,88	1,88		12,00 (3,40 - 14,50)	4,14 A		5,24	2.900 (680 - 4.170)	1.450	13,60
7 + 7 + 9¹ + 9² + 9²	1,65	1,65	2,08	2,31	2,31	10,00 (2,90 - 11,50)	3,50 A			2.860 (550 - 3.860)	1.430	13,20	1,10 + 1,10 + 1,30 + 1,50	1,98	1,98	2,48	2,78		12,00 (3,40 - 14,50)	4,20 A		2,78	2.860 (530 - 4.240)	1.430	13,40
7 + 7 + 9¹ + 9² + 12	1,60	1,60	2,00	2,24	2,56	10,00 (2,90 - 11,50)	3,57 A			2.800 (550 - 3.780)	1.400	12,90	1,00 + 1,00 + 1,30 + 1,50	1,92	1,92	2,40	2,69		12,00 (3,40 - 14,50)	4,23 A		3,07	2.840 (560 - 4.200)	1.420	13,30
7 + 7 + 9¹ + 9² + 15	1,50	1,50	1,88	2,11	3,01	10,00 (2,90 - 11,50)	3,57 A			2.800 (550 - 3.780)	1.400	12,90	1,00 + 1,00 + 1,20 + 1,40	1,80	1,80	2,26	2,53		12,00 (3,40 - 14,50)	4,24 A		3,61	2.830 (560 - 4.190)	1.415	13,30
7 + 7 + 9¹ + 9² + 18	1,40	1,40	1,74	1,96	3,50	10,00 (2,90 - 11,50)	3,56 A			2.810 (610 - 3.630)	1.405	13,00	0,90 + 0,90 + 1,10 + 1,30	1,68	1,68	2,09	2,35		12,00 (3,40 - 14,50)	4,20 A		4,20	2.860 (670 - 4.180)	1.430	13,40
7 + 7 + 9¹ + 9² + 21	1,31	1,31	1,63	1,83	3,92	10,00 (2,90 - 11,50)	3,56 A			2.810 (610 - 3.630)	1.405	13,00	0,80 + 0,80 + 1,00 + 1,20	1,57	1,57	1,95	2,20		12,00 (3,40 - 14,50)	4,20 A		4,71	2.860 (670 - 4.180)	1.430	13,40
7 + 7 + 9¹ + 9² + 24	1,23	1,23	1,53	1,72	4,29	10,00 (2,90 - 11,50)	3,64 A			2.750 (650 - 3.640)	1.375	12,70	0,80 + 0,80 + 1,00 + 1,10	1,47	1,47	1,84	2,06		12,00 (3,40 - 14,50)	4,14 A		5,16	2.900 (680 - 4.170)	1.450	13,60
7 + 7 + 9¹ + 12 + 12	1,55	1,55	1,94	2,48	2,48	10,00 (2,90 - 11,50)	3,57 A			2.800 (560 - 3.780)	1.400	12,90	1,00 + 1,00 + 1,30 + 1,50	1,86	1,86	2,32	2,98		12,00 (3,40 - 14,50)	4,18 A		2,98	2.870 (580 - 4.170)	1.435	13,50
7 + 7 + 9¹ + 12 + 15	1,46	1,46	1,82	2,34	2,92	10,00 (2,90 - 11,50)	3,57 A			2.800 (560 - 3.780)	1.400	12,90	0,90 + 0,90 + 1,20 + 1,50	1,75	1,75	2,19	2,80		12,00 (3,40 - 14,50)	4,20 A		3,51	2.860 (590 - 4.160)	1.430	13,40
7 + 7 + 9¹ + 12 + 18	1,36	1,36	1,70	2,18	3,40	10,00 (2,90 - 11,50)	3,64 A			2.750 (650 - 3.630)	1.375	12,70	0,90 + 0,90 + 1,10 + 1,40	1,63	1,63	2,04	2,61		12,00 (3,40 - 14,50)	4,15 A		4,09	2.890 (690 - 4.150)	1.445	13,60
7 + 7 + 9¹ + 12 + 21	1,27	1,27	1,60	2,04	3,82	10,00 (2,90 - 11,50)	3,64 A			2.750 (650 - 3.630)	1.375	12,70	0,80 + 0,80 + 1,00 + 1,30	1,53	1,53	1,90	2,45		12,00 (3,40 - 14,50)	4,15 A		4,59	2.890 (690 - 4.150)	1.445	13,60
7 + 7 + 9¹ + 12 + 24	1,20	1,20	1,49	1,92	4,19	10,00 (2,90 - 11,50)	3,62 A			2.760 (660 - 3.640)	1.380	12,70	0,70 + 0,70 + 0,90 + 1,20	1,44	1,44	1,79	2,30		12,00 (3,40 - 14,50)	4,17 A		5,03	2.880 (710 - 4.140)	1.440	13,50
7 + 7 + 9¹ + 15 + 15	1,38	1,38	1,72	2,76	2,76	10,00 (2,90 - 11,50)	3,57 A			2.800 (560 - 3.780)	1.400	12,90	0,90 + 0,90 + 1,10 + 1,60	1,66	1,66	2,06	3,31		12,00 (3,40 - 14,50)	4,20 A		3,31	2.860 (600 - 4.140)	1.430	13,40
7 + 7 + 9¹ + 15 + 18	1,29	1,29	1,61	2,58	3,23	10,00 (2,90 - 11,50)	3,64 A			2.750 (650 - 3.640)	1.375	12,70	0,80 + 0,80 + 1,00 + 1,60	1,55	1,55	1,93	3,10		12,00 (3,40 - 14,50)	4,15 A		3,87	2.890 (700 - 4.140)	1.445	13,60
7 + 7 + 9¹ + 15 + 21	1,21	1,21	1,52	2,42	3,64	10,00 (2,90 - 11,50)	3,64 A			2.750 (650 - 3.640)	1.375	12,70	0,80 + 0,80 + 1,00 + 1,50	1,45	1,45	1,82	2,91		12,00 (3,40 - 14,50)	4,15 A		4,37	2.890 (700 - 4.140)	1.445	13,60
7 + 7 + 9¹ + 15 + 24	1,14	1,14	1,43	2,29	4,00	10,00 (2,90 - 11,50)	3,62 A			2.760 (660 - 3.640)	1.380	12,70	0,70 + 0,70 + 0,90 + 1,50	1,37	1,37	1,71	2,74		12,00 (3,40 - 14,50)	4,17 A		4,81	2.880 (720 - 4.190)	1.440	13,50
7 + 7 + 9¹ + 18 + 18	1,21	1,21	1,52	3,03	3,03	10,00 (2,90 - 11,50)	3,60 A			2.780 (750 - 3.580)	1.390	12,80	0,80 + 0,80 + 1,00 + 1,70	1,45	1,45	1,82	3,64		12,00 (3,40 - 14,50)	4,03 A		3,64	2.980 (830 - 4.220)	1.490	14,00
7 + 7 + 9¹ + 18 + 21	1,14	1,14	1,43	2,86	3,43	10,00 (2,90 - 11,50)	3,60 A			2.780 (750 - 3.580)	1.390	12,80	0,70 + 0,70 + 0,90 + 1,70	1,37	1,37	1,71	3,43		12,00 (3,40 - 14,50)	4,03 A		4,12	2.980 (830 - 4.220)	1.490	14,00
7 + 7 + 9² + 9² + 9²	1,61	1,61	2,26	2,26	2,26	10,00 (2,90 - 11,50)	3,50 A			2.860 (550 - 3.860)	1.430	13,20	1,00 + 1,00 + 1,50 + 1,50	1,95	1,95	2,70	2,70		12,00 (3,40 - 14,50)	4,20 A		2,70	2.860 (530 - 4.240)	1.430	13,40
7 + 7 + 9² + 9² + 12	1,56	1,56	2,19	2,19	2,50	10,00 (2,90 - 11,50)	3,57 A			2.800 (550 - 3.780)	1.400	12,90	1,00 + 1,00 + 1,40 + 1,40	1,88	1,88	2,63	2,63		12,00 (3,40 - 14,50)	4,23 A		2,98	2.840 (560 - 4.200)	1.420	13,30
7 + 7 + 9² + 9² + 15	1,47	1,47	2,06	2,06	2,94	10,00 (2,90 - 11,50)	3,57 A			2.800 (550 - 3.780)	1.400	12,90	0,90 + 0,90 + 1,30 + 1,30	1,76	1,76	2,47	2,47		12,00 (3,40 - 14,50)	4,24 A		3,54	2.830 (560 - 4.190)	1.415	13,30
7 + 7 + 9² + 9² + 18	1,37	1,37	1,92	1,92	3,42	10,00 (2,90 - 11,50)	3,56 A			2.810 (610 - 3.630)	1.405	13,00	0,90 + 0,90 + 1,20 + 1,20	1,64	1,64	2,30	2,30		12,00 (3,40 - 14,50)	4,20 A		4,12	2.860 (670 - 4.180)	1.430	13,40
7 + 7 + 9² + 9² + 21	1,28	1,28	1,79	1,79	3,86	10,00 (2,90 - 11,50)	3,56 A			2.810 (610 - 3.630)	1.405	13,00	0,80 + 0,80 + 1,20 + 1,20	1,54	1,54	2,15	2,15		12,00 (3,40 - 14,50)	4,20 A		4,62	2.860 (670 - 4.180)	1.430	13,40
7 + 7 + 9² + 9² + 24	1,20	1,20	1,69	1,69	4,22	10,00 (2,90 - 11,50)	3,64 A			2.750 (650 - 3.640)	1.375	12,70	0,70 + 0,70 + 1,10 + 1,10	1,45	1,45	2,02	2,02		12,00 (3,40 - 14,50)	4,14 A		5,06	2.900 (680 - 4.170)	1.450	13,60
7 + 7 + 9² + 12 + 12	1,52	1,52	2,12	2,42	2,42	10,00 (2,90 - 11,50)	3,57 A			2.800 (560 - 3.780)	1.400	12,90	1,00 + 1,00 + 1,40 + 1,50	1,82	1,82	2,54	2,91		12,00 (3,40 - 14,50)	4,18 A		2,91	2.870 (580 - 4.170)	1.435	13,50
7 + 7 + 9² + 12 + 15	1,43	1,43	1,99	2,29	2,86	10,00 (2,90 - 11,50)	3,57 A			2.800 (560 - 3.780)	1.400	12,90	0,90 + 0,90 + 1,30 + 1,50	1,71	1,71	2,40	2,74		12,00 (3,40 - 14,50)	4,20 A		3,44	2.860 (590 - 4.160)	1.430	13,40
7 + 7 + 9² + 12 + 18	1,33	1,33	1,87	2,13	3,34	10,00 (2,90 - 11,50)	3,64 A			2.750 (650 - 3.630)	1.375	12,70	0,80 + 0,80 + 1,20 + 1,40	1,60	1,60	2,24	2,56		12,00 (3,40 - 14,50)	4,15 A		4,00	2.890 (690 - 4.150)	1.445	13,60
7 + 7 + 9² + 12 + 21	1,25	1,25	1,75	2,00	3,75	10,00 (2,90 - 11,50)	3,64 A			2.750 (650 - 3.630)	1.375	12,70	0,80 + 0,80 + 1,10 + 1,30	1,50	1,50	2,10	2,40		12,00 (3,40 - 14,50)	4,15 A		4,50	2.890 (690 - 4.150)	1.445	13,60
7 + 7 + 9² + 12 + 24	1,18	1,18	1,64	1,88	4,12	10,00 (2,90 - 11,50)	3,62 A			2.760 (660 - 3.640)	1.380	12,70	0,70 + 0,70 + 1,00 + 1,20	1,41	1,41	1,98	2,26		12,00 (3,40 - 14,50)	4,17 A		4,94	2.880 (710 - 4.140)	1.440	13,50
7 + 7 + 9² + 15 + 15	1,35	1,35	1,90	2,70	2,70	10,00 (2,90 - 11,50)	3,57 A			2.800 (560 - 3.780)	1.400	12,90	0,90 + 0,90 + 1,20 + 1,60	1,62	1,62	2,28	3,24		12,00 (3,40 - 14,50)	4,20 A		3,24	2.860 (600 - 4.140)	1.430	13,40
7 + 7 + 9² + 15 + 18	1,27	1,27	1,77	2,53	3,16	10,00 (2,90 - 11,50)	3,64 A			2.750 (650 - 3.640)	1.375	12,70	0,80 + 0,80 + 1,10 + 1,60	1,52	1,52	2,12	3,04		12,00 (3,40 - 14,50)	4,15 A		3,80	2.890 (700 - 4.140)	1.445	13,60
7 + 7 + 9² + 15 + 21	1,19	1,19	1,67	2,38	3,57	10,00 (2,90 - 11,50)	3,64 A			2.750 (650 - 3.640)	1.375	12,70	0,70 + 0,70 + 1,10 + 1,50	1,43	1,43	1,99	2,86		12,00 (3,40 - 14,50)	4,15 A		4,29	2.890 (700 - 4.140)	1.445	13,60
7 + 7 + 9² + 18 + 18	1,19	1,19	1,66	2,98	2,98	10,00 (2,90 - 11,50)	3,60 A			2.780 (750 - 3.580)	1.390	12,80	0,70 + 0,70 + 1,10 + 1,70	1,43	1,43	2,00	3,57		12,00 (3,40 - 14,50)	4,03 A		3,57	2.980 (830 - 4.220)	1.490	14,00
7 + 7 + 12 + 12 + 12	1,46	1,46	2,36	2,36	2,36	10,00 (2,90 - 11,50)	3,57 A			2.800 (560 - 3.700)	1.400	12,90	0,90 + 0,90 + 1,50 + 1,50	1,77	1,77	2,82	2,82		12,00 (3,40 - 14,50)	4,21 A		2,82	2.850 (600 - 4.200)	1.425	13,40
7 + 7 + 12 + 12 + 15	1,39	1,39	2,22	2,22	2,78	10,00 (2,90 - 11,50)	3,57 A			2.800 (570 - 3.700)	1.400	12,90	0,90 + 0,90 + 1,40 + 1,40	1,67	1,67	2,67	2,67		12,00 (3,40 - 14,50)	4,21 A		3,32	2.850 (620 - 4.190)	1.425	13,40
7 + 7 + 12 + 12 + 18	1,30	1,30	2,08	2,08	3,24	10,00 (2,90 - 11,50)	3,64 A			2.750 (660 - 3.640)	1.375	12,70	0,80 + 0,80 + 1,30 + 1,30	1,56	1,56	2,49	2,49		12,00 (3,40 - 14,50)	4,10 A		3,90	2.930 (720 - 4.190)	1.465	13,80
7 + 7 + 12 + 12 + 21	1,22	1,22	1,95	1,95	3,66	10,00 (2,90 - 11,50)	3,64 A			2.750 (660 - 3.640)	1.375	12,70	0,80 + 0,80 + 1,30 + 1,30	1,46	1,46	2,34	2,34		12,00 (3,40 - 14,50)	4,10 A		4,40	2.930 (720 - 4.190)	1.465	13,80
7 + 7 + 12 + 12 + 24	1,15	1,15	1,84	1,84	4,02	10,00 (2,90 - 11,50)	3,62 A			2.760 (700 - 3.640)	1.380	12,70	0,70 + 0,70 + 1,20 + 1,20	1,38	1,38	2,21	2,21		12,00 (3,40 - 14,50)	4,11 A		4,82	2.920 (730 - 4.180)	1.460	13,70
7 + 7 + 12 + 15 + 15	1,32	1,32	2,10	2,63	2,63	10,00 (2,90 - 11,50)	3,57 A			2.800 (600 - 3.700)	1.400	12,90	0,80 + 0,80 + 1,40 + 1,60	1,58	1,58	2,52	3,16		12,00 (3,40 - 14,50)	4,23 A		3,16	2.840 (620 - 4.180)	1.420	13,30
7 + 7 + 12 + 15 + 18	1,23	1,23	1,98	2,47	3,09	10,00 (2,90 - 11,50)	3,62 A			2.760 (660 - 3.640)	1.380	12,70	0,80 + 0,80 + 1,30 + 1,50	1,48	1,48	2,37	2,96		12,00 (3,40 - 14,50)	4,11 A		3,71	2.920 (730 - 4.180)	1.460	13,70
7 + 7 + 12 + 15 + 21	1,16	1,16	1,86	2,33	3,49	10,00 (2,90 - 11,50)	3,62 A			2.760 (660 - 3.640)	1.380	12,70	0,70 + 0,70 + 1,20 + 1,50	1,40	1,40	2,22	2,79		12,00 (3,40 - 14,50)	4,11 A		4,19	2.920 (730 - 4.180)	1.460	13,70
7 + 7 + 12 + 18 + 18	1,16	1,16	1,86	2,91	2,91	10,00 (2,90 - 11,50)	3,58 A			2.790 (760 - 3.590)	1.395	12,90	0,70 + 0,70 + 1,20 + 1,70	1,40	1,40	2,22	3,49		12,00 (3,40 - 14,50)	3,97 A		3,49	3.020 (860 - 4.200)	1.510	14,20
7 + 7 + 15 + 15 + 15	1,25	1,25	2,50	2,50	2,50	10,00 (2,90 - 11,50)	3,57 A			2.800 (600 - 3.700)	1.400	12,90	0,80 + 0,80 + 1,50 + 1,50	1,50	1,50	3,00	3,00		12,00 (3,40 - 14,50)	4,17 A		3,00	2.880 (630 - 4.160)	1.440	13,50
7 + 7 + 15 + 15 + 18	1,18	1,18	2,35	2,35	2,94	10,00 (2,90 - 11,50)	3,62 A			2.760 (660 - 3.640)	1.380	12,70	0,70 + 0,70 + 1,50 + 1,50	1,41	1,41	2,82	2,82		12,00 (3,40 - 14,50)	4,11 A		3,54	2.920 (750 - 4.170)	1.460	13,70
7 + 9¹ + 9¹ + 9¹ + 9¹	1,68	2,08	2,08	2,08	2,08	10,00 (2,90 - 11,50)	3,50 A			2.860 (550 - 3.860)	1.430	13,20	1,10 + 1,30 + 1,30 + 1,30	2,00	2,50	2,50	2,50		12,00 (3,40 - 14,50)	4,20 A		2,50	2.860 (530 - 4.240)	1.430	13,40
7 + 9¹ + 9¹ + 9¹ + 9²	1,63	2,03	2,03	2,03	2,28	10,00 (2,90 - 11,50)	3,50 A			2.860 (550 - 3.860)	1.430	13,20	1,00 + 1,30 + 1,30 + 1,30	1,95	2,44	2,44	2,44		12,00 (3,40 - 14,50)	4,20 A		2,73	2.860 (530 - 4.240)	1.430	13,40
7 + 9¹ + 9¹ + 9¹ + 12	1,57	1,97	1,97	1,97	2,52	10,00 (2,90 - 11,50)	3,57 A			2.800 (550 - 3.780)	1.400	12,90	1,00 + 1,30 + 1,30 + 1,30	1,89	2,36	2,36	2,36		12,00 (3,40 - 14,50)	4,23 A		3,03	2.840 (560 - 4.200)	1.420	13,30
7 + 9¹ + 9¹ + 9¹ + 15	1,48	1,85	1,85	1,85	2,97	10,00 (2,90 - 11,50)	3,57 A			2.800 (550 - 3.780)	1.400	12,90	0,90 + 1,20 + 1,20 + 1,20	1,78	2,22	2,22	2,22		12,00 (3,40 - 14,50)	4,24 A		3,56	2.830 (560 - 4.190)	1.415	13,30
7 + 9¹ + 9¹ + 9¹ + 18	1,38	1,72	1,72	1,72	3,46	10,00 (2,90 - 11,50)	3,56 A			2.810 (610 - 3.630)	1.405	13,00	0,90 + 1,10 + 1,10 + 1,10	1,65	2,07	2,07	2,07		12,00 (3,40 - 14,50)	4,20 A		4,14	2.860 (670 - 4.180)	1.430	13,40
7 + 9¹ + 9¹ + 9¹ + 21	1,29	1,61	1,61	1,61	3,88	10,00 (2,90 - 11,50)	3,56 A			2.810 (610 - 3.630)	1.405	13,00	0,80 + 1,00 + 1,00 + 1,00	1,53	1,94	1,94	1,94		12,00 (3,40 - 14,50)	4,20 A		4,65	2.860 (670 - 4.180)	1.430	13,40
7 + 9¹ + 9¹ + 9¹ + 24	1,20	1,52	1,52	1,52	4,24	10,00 (2,90 - 11,50)	3,64 A			2.750 (650 - 3.640)	1.375	12,70	0,70 + 1,00 + 1,00 + 1,00	1,45	1,82	1,82	1,82		12,00 (3,40 - 14,50)	4,14 A		5,09	2.900 (680 - 4.170)	1.450	13,60
7 + 9¹ + 9¹ + 9² + 9²	1,60	1,98	1,98	2,22	2,22	10,00 (2,90 - 11,50)	3,50 A			2.860 (550 - 3.860)	1.430	13,20	1,00 + 1,30 + 1,30 + 1,40	1,90	2,38	2,38	2,67		12,00 (3,40 - 14,50)	4,20 A		2,67	2.860 (530 - 4.240)	1.430	13,40
7 + 9¹ + 9¹ + 9² + 12	1,54	1,92	1,92	2,15	2,47	10,00 (2,90 - 11,50)	3,57 A			2.800 (550 - 3.780)	1.400	12,90	1,00 + 1,20 + 1,20 + 1,40	1,85	2,31	2,31	2,58		12,00 (3,40 - 14,50)	4,23 A		2,95	2.840 (560 - 4.200)	1.420	13,30
7 + 9¹ + 9¹ + 9² + 15	1,45	1,81	1,81	2,03	2,90	10,00 (2,90 - 11,50)	3,57 A			2.800 (550 - 3.780)	1.400	12,90	0,90 + 1,20 + 1,20 + 1,30	1,74	2,17	2,17	2,43		12,00 (3,40 - 14,50)	4,24 A		3,49	2.830 (560 - 4.190)	1.415	13,30
7 + 9¹ + 9¹ + 9² + 18	1,35	1,69	1,69	1,89	3,38	10,00 (2,90 - 11,50)	3,56 A			2.810 (610 - 3.630)	1.405	13,00	0,90 + 1,10 + 1,10 + 1,20	1,62	2,03	2,03	2,27		12,00 (3,40 - 14,50)	4,20 A		4,05	2.860 (670 - 4.180)	1.430	13,40
7 + 9¹ + 9¹ + 9² + 21	1,27	1,58	1,58	1,77	3,80	10,00 (2,90 - 11,50)	3,56 A			2.810 (610 - 3.630)	1.405	13,00	0,80 + 1,00 + 1,00 + 1,10	1,51	1,90	1,90	2,13		12,00 (3,40 - 14,50)	4,20 A		4,56	2.860 (670 - 4.180)	1.430	13,40
7 + 9¹ + 9¹ + 9² + 24	1,19	1,49	1,49	1,67	4,16	10,00 (2,90 - 11,50)	3,64 A			2.750 (650 - 3.640)	1.375	12,70	0,70 + 0,90 + 0,90 + 1,10	1,42	1,79	1,79	2,00		12,00 (3,40 - 14,50)	4,14 A		5,00	2.900 (680 - 4.170)	1.450	13,60
7 + 9¹ + 9¹ + 12 + 12	1,48	1,87	1,87	2,39	2,39	10,00 (2,90 - 11,50)	3,57 A			2.800 (560 - 3.780)	1.400	12,90	0,90 + 1,20 + 1,20 + 1,50	1,78	2,24	2,24	2,87		12,00 (3,40 - 14,50)	4,18 A		2,87	2.870 (580 - 4.170)	1.435	13,50
7 + 9¹ + 9¹ + 12 + 15	1,41	1,76	1,76	2,25	2,82	10,00 (2,90 - 11,50)	3,57 A			2.800 (560 - 3.780)	1.400	12,90	0,90 + 1,10 + 1,10 + 1,50	1,69	2,11	2,11	2,70		12,00 (3,40 - 14,50)	4,20 A		3,39	2.860 (590 - 4.160)	1.430	13,40
7 + 9¹ + 9¹ + 12 + 18	1,32	1,64	1,64	2,11	3,29	10,00 (2,90 - 11,50)	3,64 A			2.750 (650 - 3.630)	1.375	12,70	0,80 + 1,00 + 1,00 + 1,40	1,58	1,97	1,97	2,53		12,00 (3,40 - 14,50)	4,15 A		3,95	2.890 (690 - 4.150)	1.445	13,60
7 + 9¹ + 9¹ + 12 + 21	1,23	1,54	1,54	1,98	3,71	10,00 (2,90 - 11,50)	3,64 A			2.750 (650 - 3.630)	1.375	12,70	0,80 + 1,00 + 1,00 + 1,30	1,48	1,85	1,85	2,37		12,00 (3,40 - 14,50)	4,15 A		4,45	2.890 (690 - 4.150)	1.445	13,60
7 + 9¹ + 9¹ + 12 + 24	1,16	1,45	1,45	1,86	4,08	10,00 (2,90 - 11,50)	3,62 A			2.760 (660 - 3.640)	1.380	12,70	0,70 + 0,90 + 0,90 + 1,20	1,40	1,74	1,74	2,23		12,00 (

Free Multi 5x1 CU-5E34PBE. Minimum capacity connected: 4,5 kW. Maximum capacity connected: 17,5 kW

Indoor unit capacity	Cooling capacity (kW) Rooms						EER	SEER	Pdesign	Input power rating	A.E.C.	Current	Moisture removal	Heating capacity (kW) Rooms						COP	SCOP	Pdesign at -10°C	Input power rating	A.E.C.	Current
	A	B	C	D	E	Total (Min - Max)	W/W	W/W	kWh	W	kWh	230V (A)	Volume (l/h)	A	B	C	D	E	Total (Min - Max)	W/W	W/W	kWh	W	kWh	230V (A)
5 Rooms																									
7 + 9² + 9² + 12 + 15	1,35	1,89	1,89	2,16	2,71	10,00 (2,90 - 11,50)	3,57 A			2.800 (560 - 3.780)	1.400	12,90	0,90 + 1,20 + 1,20 + 1,40	1,62	2,27	2,27	2,59		12,00 (3,40 - 14,50)	4,20 A		3,25	2.860 (590 - 4.160)	1.430	13,40
7 + 9² + 9² + 12 + 18	1,27	1,77	1,77	2,03	3,16	10,00 (2,90 - 11,50)	3,64 A			2.750 (650 - 3.630)	1.375	12,70	0,80 + 1,10 + 1,10 + 1,30	1,51	2,13	2,13	2,43		12,00 (3,40 - 14,50)	4,15 A		3,80	2.890 (690 - 4.150)	1.445	13,60
7 + 9² + 9² + 12 + 21	1,19	1,67	1,67	1,90	3,57	10,00 (2,90 - 11,50)	3,64 A			2.750 (650 - 3.630)	1.375	12,70	0,70 + 1,10 + 1,10 + 1,20	1,42	2,00	2,00	2,29		12,00 (3,40 - 14,50)	4,15 A		4,29	2.890 (690 - 4.150)	1.445	13,60
7 + 9² + 9² + 15 + 15	1,30	1,79	1,79	2,56	2,56	10,00 (2,90 - 11,50)	3,57 A			2.800 (560 - 3.780)	1.400	12,90	0,80 + 1,20 + 1,20 + 1,60	1,54	2,15	2,15	3,08		12,00 (3,40 - 14,50)	4,20 A		3,08	2.860 (600 - 4.140)	1.430	13,40
7 + 9² + 9² + 15 + 18	1,20	1,69	1,69	2,41	3,01	10,00 (2,90 - 11,50)	3,64 A			2.750 (650 - 3.640)	1.375	12,70	0,70 + 1,10 + 1,10 + 1,50	1,45	2,02	2,02	2,89		12,00 (3,40 - 14,50)	4,15 A		3,62	2.890 (700 - 4.140)	1.445	13,60
7 + 9² + 12 + 12 + 12	1,39	1,95	2,22	2,22	2,22	10,00 (2,90 - 11,50)	3,57 A			2.800 (560 - 3.700)	1.400	12,90	0,90 + 1,30 + 1,40 + 1,40	1,66	2,33	2,67	2,67		12,00 (3,40 - 14,50)	4,21 A		2,67	2.850 (600 - 4.200)	1.425	13,40
7 + 9² + 12 + 12 + 15	1,31	1,84	2,11	2,11	2,63	10,00 (2,90 - 11,50)	3,57 A			2.800 (570 - 3.700)	1.400	12,90	0,80 + 1,20 + 1,40 + 1,40	1,57	2,21	2,53	2,53		12,00 (3,40 - 14,50)	4,21 A		3,16	2.850 (620 - 4.190)	1.425	13,40
7 + 9² + 12 + 12 + 18	1,22	1,73	1,98	1,98	3,09	10,00 (2,90 - 11,50)	3,64 A			2.750 (660 - 3.640)	1.375	12,70	0,80 + 1,10 + 1,30 + 1,30	1,48	2,07	2,37	2,37		12,00 (3,40 - 14,50)	4,10 A		3,71	2.930 (720 - 4.190)	1.465	13,80
7 + 9² + 12 + 12 + 21	1,16	1,63	1,86	1,86	3,49	10,00 (2,90 - 11,50)	3,64 A			2.750 (660 - 3.640)	1.375	12,70	0,70 + 1,00 + 1,20 + 1,20	1,40	1,95	2,23	2,23		12,00 (3,40 - 14,50)	4,10 A		4,19	2.930 (720 - 4.190)	1.465	13,80
7 + 9² + 12 + 15 + 15	1,25	1,75	2,00	2,50	2,50	10,00 (2,90 - 11,50)	3,57 A			2.800 (600 - 3.700)	1.400	12,90	0,80 + 1,10 + 1,30 + 1,50	1,50	2,10	2,40	3,00		12,00 (3,40 - 14,50)	4,23 A		3,00	2.840 (620 - 4.180)	1.420	13,30
7 + 9² + 12 + 15 + 18	1,18	1,65	1,88	2,35	2,94	10,00 (2,90 - 11,50)	3,62 A			2.760 (660 - 3.640)	1.380	12,70	0,70 + 1,10 + 1,20 + 1,50	1,41	1,98	2,26	2,82		12,00 (3,40 - 14,50)	4,11 A		3,53	2.920 (730 - 4.180)	1.460	13,70
7 + 9² + 15 + 15 + 15	1,19	1,67	2,38	2,38	2,38	10,00 (2,90 - 11,50)	3,57 A			2.800 (600 - 3.700)	1.400	12,90	0,70 + 1,10 + 1,50 + 1,50	1,42	2,00	2,86	2,86		12,00 (3,40 - 14,50)	4,17 A		2,86	2.880 (630 - 4.160)	1.440	13,50
7 + 12 + 12 + 12 + 12	1,36	2,16	2,16	2,16	2,16	10,00 (2,90 - 11,50)	3,56 A			2.810 (600 - 3.700)	1.405	13,00	0,90 + 1,40 + 1,40 + 1,40	1,64	2,59	2,59	2,59		12,00 (3,40 - 14,50)	4,17 A		2,59	2.880 (630 - 4.170)	1.440	13,50
7 + 12 + 12 + 12 + 15	1,28	2,05	2,05	2,05	2,57	10,00 (2,90 - 11,50)	3,56 A			2.810 (600 - 3.700)	1.405	13,00	0,80 + 1,30 + 1,30 + 1,30	1,54	2,46	2,46	2,46		12,00 (3,40 - 14,50)	4,17 A		3,08	2.880 (630 - 4.160)	1.440	13,50
7 + 12 + 12 + 12 + 18	1,20	1,93	1,93	1,93	3,01	10,00 (2,90 - 11,50)	3,62 A			2.760 (670 - 3.640)	1.380	12,70	0,70 + 1,20 + 1,20 + 1,20	1,45	2,31	2,31	2,31		12,00 (3,40 - 14,50)	4,12 A		3,62	2.910 (750 - 4.160)	1.455	13,70
7 + 12 + 12 + 15 + 15	1,22	1,95	1,95	2,44	2,44	10,00 (2,90 - 11,50)	3,56 A			2.810 (600 - 3.710)	1.405	13,00	0,80 + 1,30 + 1,30 + 1,50	1,46	2,34	2,34	2,93		12,00 (3,40 - 14,50)	4,18 A		2,93	2.870 (650 - 4.140)	1.435	13,50
7 + 12 + 12 + 15 + 18	1,15	1,84	1,84	2,30	2,87	10,00 (2,90 - 11,50)	3,62 A			2.760 (670 - 3.640)	1.380	12,70	0,70 + 1,20 + 1,20 + 1,50	1,37	2,21	2,21	2,76		12,00 (3,40 - 14,50)	4,12 A		3,45	2.910 (760 - 4.150)	1.455	13,70
7 + 12 + 15 + 15 + 15	1,15	1,86	2,33	2,33	2,33	10,00 (2,90 - 11,50)	3,56 A			2.810 (600 - 3.710)	1.405	13,00	0,70 + 1,20 + 1,50 + 1,50	1,40	2,23	2,79	2,79		12,00 (3,40 - 14,50)	4,20 A		2,79	2.860 (660 - 4.130)	1.430	13,40
9¹ + 9¹ + 9¹ + 9¹ + 9¹	2,00	2,00	2,00	2,00	2,00	10,00 (2,90 - 11,50)	3,50 A			2.860 (550 - 3.860)	1.430	13,20	1,30 + 1,30 + 1,30 + 1,30	2,40	2,40	2,40	2,40		12,00 (3,40 - 14,50)	4,20 A		2,40	2.860 (530 - 4.240)	1.430	13,40
9¹ + 9¹ + 9¹ + 9¹ + 9²	1,95	1,95	1,95	1,95	2,20	10,00 (2,90 - 11,50)	3,50 A			2.860 (550 - 3.860)	1.430	13,20	1,30 + 1,30 + 1,30 + 1,30	2,34	2,34	2,34	2,34		12,00 (3,40 - 14,50)	4,20 A		2,64	2.860 (530 - 4.240)	1.430	13,40
9¹ + 9¹ + 9¹ + 9¹ + 12	1,89	1,89	1,89	1,89	2,44	10,00 (2,90 - 11,50)	3,57 A			2.800 (550 - 3.780)	1.400	12,90	1,20 + 1,20 + 1,20 + 1,20	2,27	2,27	2,27	2,27		12,00 (3,40 - 14,50)	4,23 A		2,92	2.840 (560 - 4.200)	1.420	13,30
9¹ + 9¹ + 9¹ + 9¹ + 15	1,79	1,79	1,79	1,79	2,84	10,00 (2,90 - 11,50)	3,57 A			2.800 (550 - 3.780)	1.400	12,90	1,20 + 1,20 + 1,20 + 1,20	2,14	2,14	2,14	2,14		12,00 (3,40 - 14,50)	4,24 A		3,44	2.830 (560 - 4.190)	1.415	13,30
9¹ + 9¹ + 9¹ + 9¹ + 18	1,67	1,67	1,67	1,67	3,32	10,00 (2,90 - 11,50)	3,56 A			2.810 (610 - 3.630)	1.405	13,00	1,10 + 1,10 + 1,10 + 1,10	2,00	2,00	2,00	2,00		12,00 (3,40 - 14,50)	4,20 A		4,00	2.860 (670 - 4.180)	1.430	13,40
9¹ + 9¹ + 9¹ + 9¹ + 21	1,56	1,56	1,56	1,56	3,76	10,00 (2,90 - 11,50)	3,56 A			2.810 (610 - 3.630)	1.405	13,00	1,00 + 1,00 + 1,00 + 1,00	1,88	1,88	1,88	1,88		12,00 (3,40 - 14,50)	4,20 A		4,48	2.860 (670 - 4.180)	1.430	13,40
9¹ + 9¹ + 9¹ + 9¹ + 24	1,47	1,47	1,47	1,47	4,12	10,00 (2,90 - 11,50)	3,64 A			2.750 (650 - 3.640)	1.375	12,70	0,90 + 0,90 + 0,90 + 0,90	1,76	1,76	1,76	1,76		12,00 (3,40 - 14,50)	4,14 A		4,96	2.900 (680 - 4.170)	1.450	13,60
9¹ + 9¹ + 9¹ + 9² + 9²	1,90	1,90	1,90	2,15	2,15	10,00 (2,90 - 11,50)	3,50 A			2.860 (550 - 3.860)	1.430	13,20	1,20 + 1,20 + 1,20 + 1,40	2,30	2,30	2,30	2,55		12,00 (3,40 - 14,50)	4,20 A		2,55	2.860 (530 - 4.240)	1.430	13,40
9¹ + 9¹ + 9¹ + 9² + 12	1,85	1,85	1,85	2,07	2,38	10,00 (2,90 - 11,50)	3,57 A			2.800 (550 - 3.780)	1.400	12,90	1,20 + 1,20 + 1,20 + 1,30	2,22	2,22	2,22	2,49		12,00 (3,40 - 14,50)	4,23 A		2,85	2.840 (560 - 4.200)	1.420	13,30
9¹ + 9¹ + 9¹ + 9² + 15	1,75	1,75	1,75	1,95	2,80	10,00 (2,90 - 11,50)	3,57 A			2.800 (550 - 3.780)	1.400	12,90	1,10 + 1,10 + 1,10 + 1,30	2,10	2,10	2,10	2,34		12,00 (3,40 - 14,50)	4,24 A		3,36	2.830 (560 - 4.190)	1.415	13,30
9¹ + 9¹ + 9¹ + 9² + 18	1,63	1,63	1,63	1,83	3,28	10,00 (2,90 - 11,50)	3,56 A			2.810 (610 - 3.630)	1.405	13,00	1,00 + 1,00 + 1,00 + 1,20	1,96	1,96	1,96	2,20		12,00 (3,40 - 14,50)	4,20 A		3,92	2.860 (670 - 4.180)	1.430	13,40
9¹ + 9¹ + 9¹ + 9² + 21	1,53	1,53	1,53	1,72	3,69	10,00 (2,90 - 11,50)	3,56 A			2.810 (610 - 3.630)	1.405	13,00	1,00 + 1,00 + 1,00 + 1,10	1,84	1,84	1,84	2,06		12,00 (3,40 - 14,50)	4,20 A		4,42	2.860 (670 - 4.180)	1.430	13,40
9¹ + 9¹ + 9¹ + 9² + 24	1,45	1,45	1,45	1,60	4,05	10,00 (2,90 - 11,50)	3,64 A			2.750 (650 - 3.640)	1.375	12,70	0,90 + 0,90 + 0,90 + 1,00	1,73	1,73	1,73	1,94		12,00 (3,40 - 14,50)	4,14 A		4,87	2.900 (680 - 4.170)	1.450	13,60
9¹ + 9¹ + 9¹ + 12 + 12	1,80	1,80	1,80	2,30	2,30	10,00 (2,90 - 11,50)	3,57 A			2.800 (560 - 3.780)	1.400	12,90	1,20 + 1,20 + 1,20 + 1,50	2,16	2,16	2,16	2,76		12,00 (3,40 - 14,50)	4,18 A		2,76	2.870 (580 - 4.170)	1.435	13,50
9¹ + 9¹ + 9¹ + 12 + 15	1,70	1,70	1,70	2,18	2,72	10,00 (2,90 - 11,50)	3,57 A			2.800 (560 - 3.780)	1.400	12,90	1,10 + 1,10 + 1,10 + 1,40	2,04	2,04	2,04	2,61		12,00 (3,40 - 14,50)	4,20 A		3,27	2.860 (590 - 4.160)	1.430	13,40
9¹ + 9¹ + 9¹ + 12 + 18	1,59	1,59	1,59	2,04	3,19	10,00 (2,90 - 11,50)	3,64 A			2.750 (650 - 3.630)	1.375	12,70	1,00 + 1,00 + 1,00 + 1,30	1,91	1,91	1,91	2,45		12,00 (3,40 - 14,50)	4,15 A		3,82	2.890 (690 - 4.150)	1.445	13,60
9¹ + 9¹ + 9¹ + 12 + 21	1,50	1,50	1,50	1,91	3,59	10,00 (2,90 - 11,50)	3,64 A			2.750 (650 - 3.630)	1.375	12,70	1,00 + 1,00 + 1,00 + 1,20	1,80	1,80	1,80	2,29		12,00 (3,40 - 14,50)	4,15 A		4,31	2.890 (690 - 4.150)	1.445	13,60
9¹ + 9¹ + 9¹ + 15 + 15	1,62	1,62	1,62	2,57	2,57	10,00 (2,90 - 11,50)	3,57 A			2.800 (560 - 3.780)	1.400	12,90	1,00 + 1,00 + 1,00 + 1,60	1,94	1,94	1,94	3,09		12,00 (3,40 - 14,50)	4,20 A		3,09	2.860 (600 - 4.140)	1.430	13,40
9¹ + 9¹ + 9¹ + 15 + 18	1,52	1,52	1,52	2,41	3,03	10,00 (2,90 - 11,50)	3,64 A			2.750 (650 - 3.640)	1.375	12,70	1,00 + 1,00 + 1,00 + 1,50	1,82	1,82	1,82	2,90		12,00 (3,40 - 14,50)	4,15 A		3,64	2.890 (700 - 4.140)	1.445	13,60
9¹ + 9¹ + 9¹ + 15 + 21	1,43	1,43	1,43	2,28	3,43	10,00 (2,90 - 11,50)	3,64 A			2.750 (650 - 3.640)	1.375	12,70	0,90 + 0,90 + 0,90 + 1,50	1,71	1,71	1,71	2,74		12,00 (3,40 - 14,50)	4,15 A		4,13	2.890 (700 - 4.140)	1.445	13,60
9¹ + 9¹ + 9¹ + 18 + 18	1,42	1,42	1,42	2,87	2,87	10,00 (2,90 - 11,50)	3,60 A			2.780 (750 - 3.580)	1.390	12,80	0,90 + 0,90 + 0,90 + 1,70	1,72	1,72	1,72	3,42		12,00 (3,40 - 14,50)	4,03 A		3,42	2.980 (830 - 4.220)	1.490	14,00
9¹ + 9¹ + 9² + 9² + 9²	1,88	1,88	2,08	2,08	2,08	10,00 (2,90 - 11,50)	3,50 A			2.860 (550 - 3.860)	1.430	13,20	1,20 + 1,20 + 1,30 + 1,30	2,25	2,25	2,50	2,50		12,00 (3,40 - 14,50)	4,20 A		2,50	2.860 (530 - 4.240)	1.430	13,40
9¹ + 9¹ + 9² + 9² + 12	1,81	1,81	2,03	2,03	2,32	10,00 (2,90 - 11,50)	3,57 A			2.800 (550 - 3.780)	1.400	12,90	1,20 + 1,20 + 1,30 + 1,30	2,17	2,17	2,43	2,43		12,00 (3,40 - 14,50)	4,23 A		2,80	2.840 (560 - 4.200)	1.420	13,30
9¹ + 9¹ + 9² + 9² + 15	1,71	1,71	1,92	1,92	2,74	10,00 (2,90 - 11,50)	3,57 A			2.800 (550 - 3.780)	1.400	12,90	1,10 + 1,10 + 1,20 + 1,20	2,05	2,05	2,30	2,30		12,00 (3,40 - 14,50)	4,24 A		3,30	2.830 (560 - 4.190)	1.415	13,30
9¹ + 9¹ + 9² + 9² + 18	1,60	1,60	1,79	1,79	3,22	10,00 (2,90 - 11,50)	3,56 A			2.810 (610 - 3.630)	1.405	13,00	1,00 + 1,00 + 1,20 + 1,20	1,92	1,92	2,15	2,15		12,00 (3,40 - 14,50)	4,20 A		3,86	2.860 (670 - 4.180)	1.430	13,40
9¹ + 9¹ + 9² + 9² + 21	1,51	1,51	1,69	1,69	3,60	10,00 (2,90 - 11,50)	3,56 A			2.810 (610 - 3.630)	1.405	13,00	1,00 + 1,00 + 1,10 + 1,10	1,81	1,81	2,02	2,02		12,00 (3,40 - 14,50)	4,20 A		4,34	2.860 (670 - 4.180)	1.430	13,40
9¹ + 9¹ + 9² + 12 + 12	1,76	1,76	1,98	2,25	2,25	10,00 (2,90 - 11,50)	3,57 A			2.800 (560 - 3.780)	1.400	12,90	1,10 + 1,10 + 1,30 + 1,50	2,11	2,11	2,38	2,70		12,00 (3,40 - 14,50)	4,18 A		2,70	2.870 (580 - 4.170)	1.435	13,50
9¹ + 9¹ + 9² + 12 + 15	1,67	1,67	1,86	2,13	2,67	10,00 (2,90 - 11,50)	3,57 A			2.800 (560 - 3.780)	1.400	12,90	1,10 + 1,10 + 1,20 + 1,40	2,00	2,00	2,24	2,56		12,00 (3,40 - 14,50)	4,20 A		3,20	2.860 (590 - 4.160)	1.430	13,40
9¹ + 9¹ + 9² + 12 + 18	1,56	1,56	1,75	2,00	3,13	10,00 (2,90 - 11,50)	3,64 A			2.750 (650 - 3.630)	1.375	12,70	1,00 + 1,00 + 1,10 + 1,30	1,88	1,88	2,09	2,40		12,00 (3,40 - 14,50)	4,15 A		3,75	2.890 (690 - 4.150)	1.445	13,60
9¹ + 9¹ + 9² + 12 + 21	1,47	1,47	1,65	1,88	3,53	10,00 (2,90 - 11,50)	3,64 A			2.750 (650 - 3.630)	1.375	12,70	0,90 + 0,90 + 1,10 + 1,20	1,76	1,76	1,98	2,26		12,00 (3,40 - 14,50)	4,15 A		4,24	2.890 (690 - 4.150)	1.445	13,60
9¹ + 9¹ + 9² + 15 + 15	1,58	1,58	1,78	2,53	2,53	10,00 (2,90 - 11,50)	3,57 A			2.800 (560 - 3.780)	1.400	12,90	1,00 + 1,00 + 1,10 + 1,60	1,90	1,90	2,12	3,04		12,00 (3,40 - 14,50)	4,20 A		3,04	2.860 (600 - 4.140)	1.430	13,40
9¹ + 9¹ + 9² + 15 + 18	1,49	1,49	1,66	2,38	2,98	10,00 (2,90 - 11,50)	3,64 A			2.750 (650 - 3.640)	1.375	12,70	0,90 + 0,90 + 1,10 + 1,50	1,79	1,79	1,99	2,86		12,00 (3,40 - 14,50)	4,15 A		3,57	2.890 (700 - 4.140)	1.445	13,60
9¹ + 9¹ + 12 + 12 + 12	1,70	1,70	2,20	2,20	2,20	10,00 (2,90 - 11,50)	3,57 A			2.800 (560 - 3.700)	1.400	12,90	1,10 + 1,10 + 1,40 + 1,40	2,04	2,04	2,64	2,64		12,00 (3,40 - 14,50)	4,21 A		2,64	2.850 (600 - 4.200)	1.425	13,40
9¹ + 9¹ + 12 + 12 + 15	1,62	1,62	2,08	2,08	2,60	10,00 (2,90 - 11,50)	3,57 A			2.800 (570 - 3.700)	1.400	12,90	1,00 + 1,00 + 1,30 + 1,30	1,95	1,95	2,49	2,49		12,00 (3,40 - 14,50)	4,21 A		3,12	2.850 (620 - 4.190)	1.425	13,40
9¹ + 9¹ + 12 + 12 + 18	1,52	1,52	1,95	1,95	3,06	10,00 (2,90 - 11,50)	3,64 A			2.750 (660 - 3.640)	1.375	12,70	1,00 + 1,00 + 1,30 + 1,30	1,83	1,83	2,34	2,34		12,00 (3,40 - 14,50)	4,10 A		3,66	2.930 (720 - 4.190)	1.465	13,80
9¹ + 9¹ + 12 + 12 + 21	1,44	1,44	1,84	1,84	3,44	10,00 (2,90 - 11,50)	3,64 A			2.750 (660 - 3.640)	1.375	12,70	0,90 + 0,90 + 1,20 + 1,20	1,72	1,72	2,21	2,21		12,00 (3,40 - 14,50)	4,10 A		4,14	2.930 (720 - 4.190)	1.465	13,80
9¹ + 9¹ + 12 + 15 + 15	1,54	1,54	1,98	2,47	2,47	10,00 (2,90 - 11,50)	3,57 A			2.800 (600 - 3.700)	1.400	12,90	1,00 + 1,00 + 1,30 + 1,50	1,85	1,85	2,38	2,96		12,00 (3,40 - 14,50)	4,23 A		2,96	2.840 (620 - 4.180)	1.420	13,30
9¹ + 9¹ + 12 + 15 + 18	1,45	1,45	1,86	2,33	2,91	10,00 (2,90 - 11,50)	3,62 A			2.760 (660 - 3.640)	1.380	12,70	0,90 + 0,90 + 1,20 + 1,50	1,74	1,74	2,23	2,79		12,00 (3,40 - 14,50)	4,11 A		3,50	2.920 (730 - 4.180)	1.460	13,70
9¹ + 9¹ + 15 + 15 + 15	1,46	1,46	2,36	2,36	2,36	10,00 (2,90 - 11,50)	3,57 A			2.800 (600 - 3.700)	1.400	12,90	0,90 + 0,90 + 1,50 + 1,50	1,77	1,77	2,82	2,82		12,00 (3,40 - 14,50)	4,17 A		2,82	2.880 (630 - 4.160)	1.440	13,50
9¹ + 9² + 9² + 9² + 9²	1,84	2,04	2,04	2,04	2,04	10,00 (2,90 - 11,50)	3,50 A			2.860 (550 - 3.860)	1.430	13,20	1,20 + 1,30 + 1,30 + 1,30	2,20	2,45	2,45	2,45		12,00 (3,40 - 14,50)	4,20 A		2,45	2.860 (530 - 4.240)	1.430	13,40
9¹ + 9² + 9² + 9² + 12	1,76	1,99	1,99	1,99	2,27	10,00 (2,90 - 11,50)	3,57 A			2.800 (550 - 3.780)	1.400	12,90	1,10 + 1,30 + 1,30 + 1,30	2,13	2,38	2,38	2,38		12,00 (3,40 - 14,50)	4,23 A		2,73	2.840 (560 - 4.200)	1.420	13,30
9¹ + 9² + 9² + 9² + 15	1,68	1,88	1,88	1,88	2,68	10,00 (2,90 - 11,50)	3,57 A			2.800 (550 - 3.780)	1.400	12,90	1,10 + 1,20 + 1,20 + 1,20	2,00	2,26	2,26	2,26		12,00 (3,40 - 14,50)	4,24 A		3,22	2.830 (560 - 4.190)	1.415	13,30
9¹ + 9² + 9² + 9² + 18	1,57	1,76	1,76	1,76	3,15	10,00 (2,90 - 11,50)	3,56 A			2.810 (610 - 3.630)	1.405	13,00	1,00 + 1,10 + 1,10 + 1,10	1,89	2,11	2,11	2,11		12,00 (3,40 - 14,50)	4,20 A		3,78	2.860 (670 - 4.180)	1.430	13,40
9¹ + 9² + 9² + 9² + 21	1,47	1,66	1,66	1,66	3,55	10,00 (2,90 - 11,50)	3,56 A			2.810 (610 - 3.630)	1.405	13,00	0,90 + 1,10 + 1,10 + 1,10	1,77	1,99	1,99	1,99		12,00 (3,40 - 14,50)	4,20 A		4,26	2.860 (670 - 4.180)	1.430	13,40
9¹ + 9² + 9² + 12 + 12	1,72	1,93	1,93	2,21	2,21	10,00 (2,90 - 11,50)	3,57 A			2.800 (560 - 3.780)	1.400	12,90	1,10 + 1,20 + 1,20 + 1,40	2,06	2,32	2,32	2,65		12,00 (3,40 - 14,50)	4,18 A		2,65	2.870 (580 - 4.170)	1.435	13,50
9¹ + 9² + 9² + 12 + 15	1,63	1,83	1,83	2,09	2,62	10,00 (2,90 - 11,50)	3,57 A			2.800 (560 - 3.780)	1.400	12,90	1,00 + 1,20 + 1,20 + 1,40	1,95	2,20	2,20	2,51		12,00 (3,40 - 14,50)	4,20 A		3,14	2.860 (590 - 4.160)	1.430	13,40
9¹ + 9² + 9² + 12 + 18	1,53	1,72	1,72	1,96	3,07	10,00 (2,90 - 11,50)	3,64 A			2.750 (650 - 3.630)	1.375	12,70	1,00 + 1,10 + 1,10 + 1,30	1,84	2,06	2,06	2,36		12,00 (3,40 - 14,50)	4,15 A		3,68	2.890 (690 - 4.150)	1.445	13,60
9¹ + 9² + 9² + 12 + 21	1,44	1,62	1,62	1,85	3,47	10,00 (2,90 - 11,50)	3,64 A			2.750 (650 - 3.630)	1.375	12,70	0,90 + 1,00 + 1,00 + 1,20	1,73	1,94	1,94	2,22		12,00 (3,40 - 14,50)	4,15 A		4,17	2.890 (690 - 4.150)	1.445	13,60
9¹ + 9² + 9² + 15 + 15	1,52	1,70	1,94	2,42	2,42	10,00 (2,90 - 11,50)	3,57 A			2.800 (600 - 3.700)	1.400	12,90	1,00 + 1,10 + 1,10 + 1,50	1,81	2,04	2,33	2,91		12,00 (3,40 - 14,50)	4,23 A		2,91	2.840 (620 - 4.180)	1.420	13,30
9¹ + 9² + 12 + 15 + 18	1,42	1,60	1,83	2,29	2,86	10,00 (2,90 - 11,50)	3,62 A			2.760 (660 - 3.640)	1.380	12,70	0,90 + 1,00 + 1,20 + 1,50	1,71	1,92	2,19	2,74		12,00 (3,40 - 14,50)	4,11 A		3,44	2.920 (730 - 4.180)	1.460	13,70
9¹ + 9² + 15 + 15 + 15	1,45	1,62	2,31	2,31	2,31	10,00 (2,90 - 11,50)	3,57 A			2.800 (600 - 3.700)	1.400	12,90	0,90 + 1,00 + 1,50 + 1,50	1,73	1,96	2,77	2,77		12,00 (3,40 - 14,50)	4,17 A		2,77	2.880 (630 - 4.160)	1.440	13,50
9¹ + 12 + 12 + 12 + 12	1,64	2,09	2,09	2,09	2,09	10,00 (2,90 - 11,50)	3,56 A			2.810 (600 - 3.700)	1.405	13,00	1,00 + 1,40 + 1,40 + 1,40	1,96	2,51	2,51	2,51		12,00 (3,40 - 14,50)	4,17 A		2,51	2.880 (630 - 4.170)	1.440	13,50
9¹ + 12 + 12 + 12 + 15	1,55	1,99	1,99	1,99	2,48	10,00 (2,90 - 11,50)	3,56 A			2.810 (600 - 3.700)	1.405	13,00	1,00 + 1,30 + 1,30 + 1,30	1,85	2,39	2,39	2,39		12,00 (3,40 - 14,50)	4,17 A		2,98	2.880 (630 - 4.160)	1.440	13,50
9¹ + 12 + 12 + 12 + 18	1,46	1,87	1,87	1,87	2,93	10,00 (2,90 - 11,50)	3,62 A			2.760 (670 - 3.640)	1.380	12,70	0,90 + 1,20 + 1,20 + 1,20	1,74	2,25	2,25	2,25		12,00 (3,40 - 14,50)	4,12 A		3,51	2.910 (750 - 4.160)	1.455	13,70
9¹ + 12 + 12 + 15 + 15	1,48	1,89	1,89	2,37	2,37	10,00 (2,90 - 11,50)	3,56 A

Internet Control Ready
INTERNET CONTROL

Internet Control is a next generation system providing a user-friendly remote control of air conditioning or heat pump units from everywhere, using a simple Android or iOS smartphone, tablet or PC via internet.

Energy saving
INVERTER+

Inverter plus products improve on the characteristics of standard Inverter range by over 20%. This means 20% less consumption and 20% OFF your electric bill. A Inverter plus is also A class on cooling and heating mode.

Up to 28% energy savings (cooling)
ECONAVI

Econavi features intelligent Human Activity Sensor and new Sunlight Sensor technologies that can detect and reduce waste by optimising air conditioner operation according to room conditions. With just one touch of a button, you can save energy efficiently with uninterrupted cooling, comfort and convenience.

6,80 A++ SEER
SEASONAL ENERGY EFFICIENCY RATIO

Exceptional Seasonal Cooling Efficiency based on the new ErP regulation. Higher ESEER ratings mean greater efficiency. Save all the year while cooling!

4,00 A+ SCOP*
SEASONAL COEFFICIENT OF PERFORMANCE

Exceptional Seasonal Heating Efficiency based on the new ErP regulation. Higher SCOP ratings mean greater efficiency. Save all the year while heating!

Down to -15°C in cooling mode
OUTDOOR TEMPERATURE

The air conditioner works in cooling only mode with an outdoor temperature of -15°C.

Down to -20°C in heating mode
OUTDOOR TEMPERATURE

The air conditioner works in heat pump mode even when outdoor temperatures are as low as -20°C or -15°C.

Easy control by BMS
CONNECTIVITY

The communication port is integrated into the indoor unit and provides easy connection to, and control of, your Panasonic heat pump to your home or building management system.

Environmentally friendly refrigerant
R410A

R410A. Environmentally friendly refrigerant.

Possible to use on R22 pipings
R22 RENEWAL

The Panasonic renewal system allows good quality existing R22 pipe work to be re-used whilst installing new high efficiency R410A systems.

5 year compressor warranty

5 years warranty.
We guarantee the compressors in the entire range for five years.



PACi Standard for economy and value

With high quality design and engineering, the PACi Standard is the perfect solution for projects which demand quality on a limited budget. In addition, its compact size and light weight make it ideal for installations with limited space including small commercial and residential applications.

PACi Elite, Newly designed next generation commercial!

Energy-saving concept. The use of energy saving designs for the structure of fans, fan motors, compressors and heat exchangers resulted in a high COP value, ranked as one of the top classed in the industry. In addition, use of highly efficient R410A refrigerant reduces CO_2 emission and lowers operating costs.

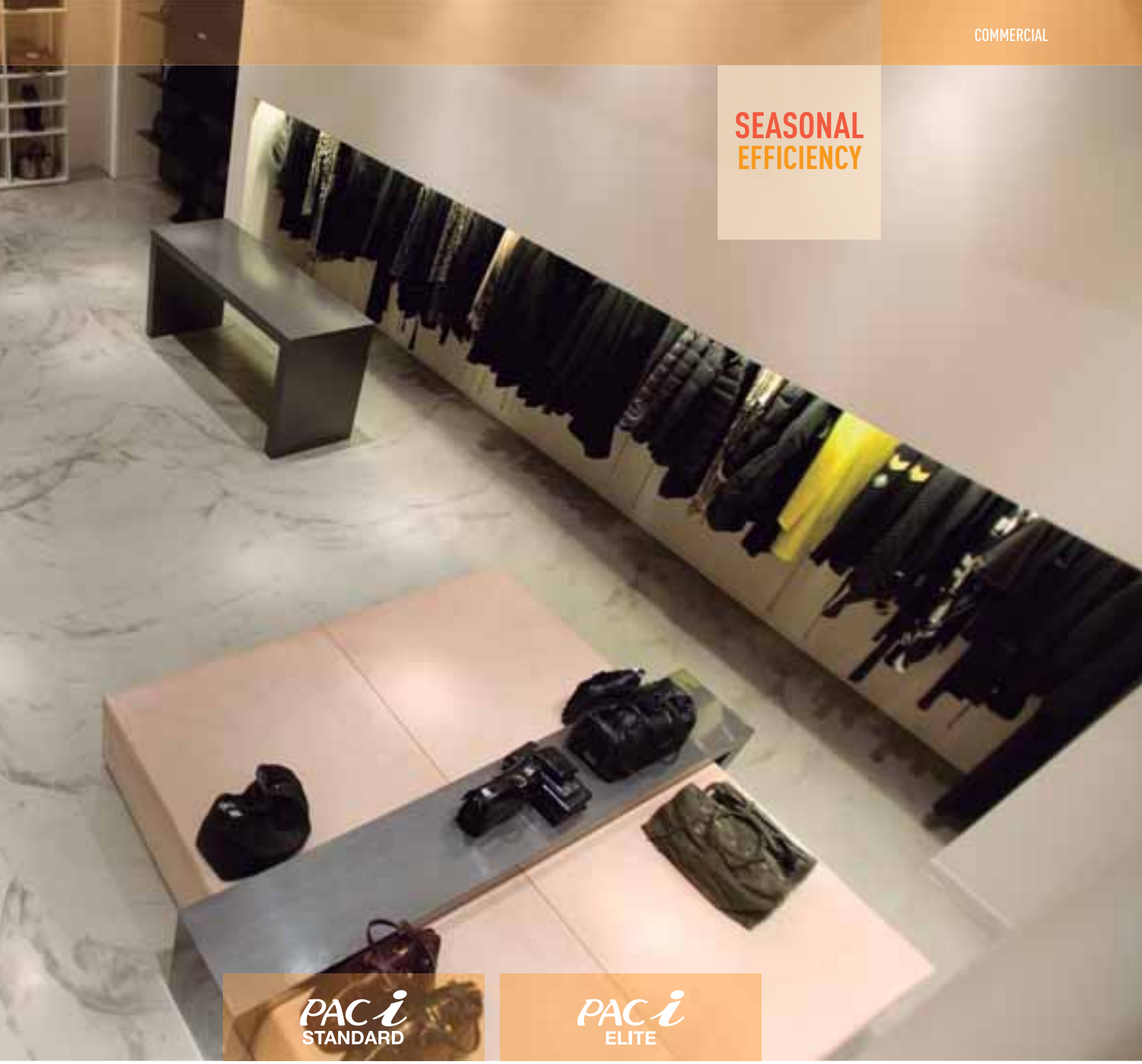

SEASONAL EFFICIENCY

PAC i STANDARD

PAC i ELITE

WELCOME TO THE COMMERCIAL RANGE

Here are some of your new air conditioner's major features.
Panasonic has developed an impressive range of highly efficient Commercial Air Conditioners. This range confirms our commitment to the environment. Our Inverter compressors optimise performance and thus reduce energy costs.



Energy saving

INVERTER +

PACi STANDARD

PACi ELITE

PACi Standard

For economy and value

With high quality design and engineering, the PACi Standard is the perfect solution for projects which demand quality on a limited budget. In addition, its compact size and light weight make it ideal for installations with limited space including small commercial and residential applications.

PACi Elite

Newly designed next generation of commercial air conditionning

Energy-saving concept. The use of energy saving design for the structure of fans, fan motors, compressors and heat exchangers resulted in high COP value which ranked as one the top class in the industry. In addition, use of highly efficient R410A refrigerant reduces CO_2 emission and lowers operating costs.

SEASONAL EFFICIENCY

PRODUCT FOLLOWS THE NEW ECODESIGN REQUIREMENTS



PACi Standard

- Good balance, system cost vs energy efficiency
- Top class ESEER/SCOP as a Standard Inverter category ESEER: A++ / SCOP: A+ at 10.0 kW (in Cassette 90x90)
- Interchangeable controller with ECOi
- Compact outdoor units
- Twin connection possible
- Cooling operation up to -15°C
- Heating operation up to -10°C

New PACi Elite

- Meeting all necessary safety approvals to ensure quality and safety
- Top-class ESEER: A++ / SCOP: A+ at 10.0 kW (in Cassette 90x90 and Ceiling)
- Cooling operation is possible when outdoor temperature as high as 46°C
- DC inverter technology combined with R410A for excellent efficiency
- Cooling operation is possible when outdoor temperature as low as -15°C
- Heating operation is possible when outdoor temperature as low as -20°C
- Compact outdoor units
- Auto restart from outdoor unit
- Twin, Triple and Doble-Twin connection possible





PACi Standard: outdoor unit

More compact

The outdoor unit is much more compact than the previous model. The slim and lightweight design means the PACi outdoor unit can be installed in a number of situations.

* Only for U-100PEY1E8, U-125PEY1E8, U-100PEY1E5 and U-125PEY1E5.



PACi Elite: outdoor unit

Wide operating range

- Cooling operation is possible when outdoor temperature as low as -15°C
- Cooling operation is possible when outdoor temperature as high as 46°C
- Heating operation is possible when outdoor temperature as low as -20°C

The remote control temperature setting offers a range from 18°C to 30°C.

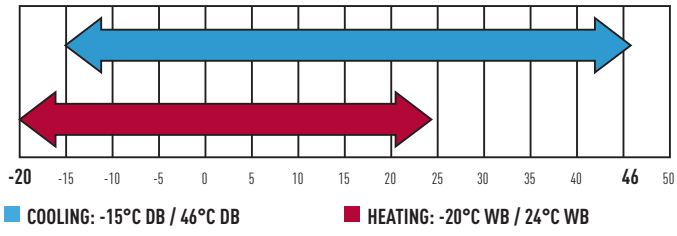

Product Quality and Safety

All Panasonic air conditioners undergo strict quality and safety tests before sale. This rigorous process includes obtaining all necessary safety approvals, to ensure that all air conditioners we sell are not only built to the highest market standards, but are also completely safe.

Quiet mode

2, 4 or 6 dB can be reduced by different setting on your choice. External input signal is also available.

Increased Piping Length for Greater Design Flexibility

Adaptable to various building types and sizes.
Maximum piping length: 75m (10.0, 12.5, 14.0kW). 50m (6.0, 7.1kW).

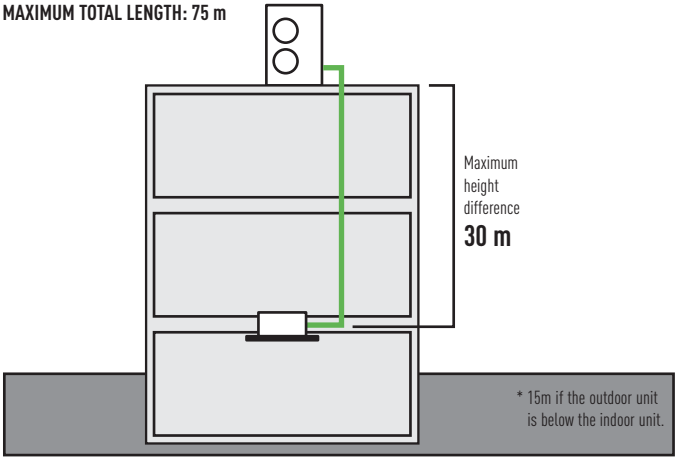

Compact & Flexible-design

The slim and lightweight design means the PACi outdoor unit can be installed in a number of compact situations.
As the unit only weighs 98 kg, it is easy to carry and easy to install.

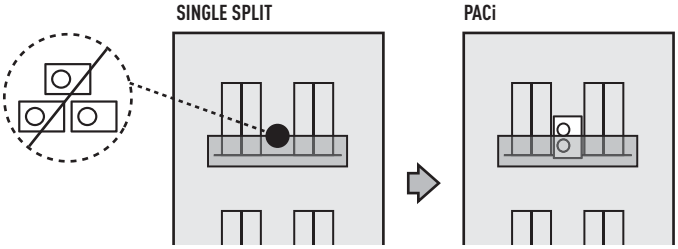

Demand Response Compliant (CZ-CAPDC3)

This optional part allows demand control of the outdoor unit.
Several level of settings are available:
- Level-1, 2, 3 : 75 / 50 / 0 %
- Level-1, 2 can be set in 40 - 100% (40, 45, 50...95, 100: each 5%)

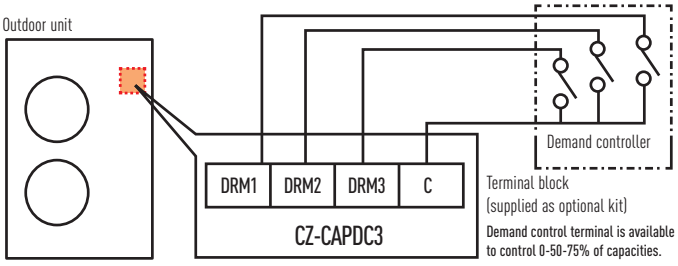

Improved energy saving

Operating efficiency has been improved using highly efficient R410A refrigerant, new DC inverter compressor, new DC motor and a new heat exchanger design.

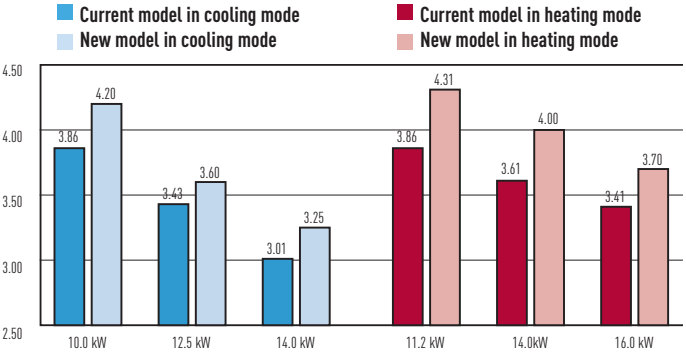

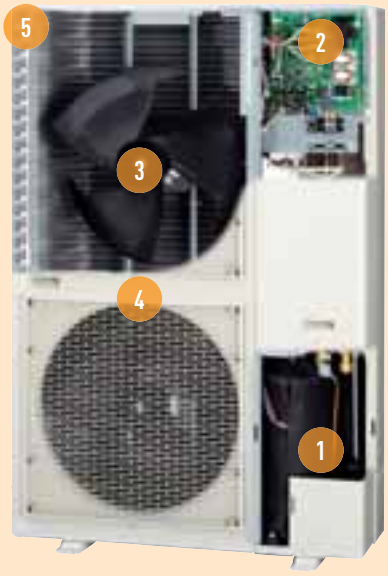

1. Compact & highly efficient compressor
2. Printed circuit board (P-LINK)
3. DC fan motor
4. New large diagonal (520 mm) air flow fan
5. High-efficiency heat exchanger

Energy saving concept

The use of energy saving designs for the structure of fans, fan motors, compressors and heat exchanges has resulted in a high COP value, ranked as one of the top classed in the industry. In addition, use of highly efficient R410A refrigerant reduces CO_2 emission and lowers operating costs.

1. Compact & highly efficient compressor. Large-capacity inverter compressor has been adopted. The inverter compressor is superior in performance with improved partial-load capacity.
2. Printed circuit board (P-LINK). To improve maintenance, the number of PCBs have been reduced to two.
3. DC fan motor. Considering load and outside temperature, the DC motor is controlled for optimum air volume.
4. New large diagonal (520 mm) air flow fan. The fan has been designed to reduce air turbulence and increase efficiency. As fan diameter has been increased to 520 mm, the air volume has been increased by 12% whilst maintaining a low sound level.
5. High-efficiency heat exchanger. The heat exchanger size and the copper tube sizes in the heat exchanger have been redesigned to increase efficiency.

Excellent ESEER and SCOP values

Panasonic have a extremely high ESEER and SCOP values following the SBEM method (some other manufacturers may use another non official calculation method). Developed by BRE, SBEM (Simplified Building Energy Model) is the basis of non-domestic building energy calculations. Based on the National calculation method (NCM), it is used to determine compliance with Part L of the Building Regulations and is also used to provide Energy Performance Certification.

Non-Domestic Building Services Compliance Guide provides information on various aspects of the calculation method, including those of Heat Pumps (Section 3), and Comfort Cooling (Section 9).

SCOP - Seasonal Coefficient of Performance				
Part Load COP	25%	50%	75%	100%
Ambient conditions	15°C	7°C	1°C	-5°C
Weighting factor	0,20 (a)	0,36 (b)	0,32 (c)	0,12 (d)

UK winter -5°C DB (outdoor temperature), 20°C WB (indoor temperature)

SEER - Seasonal Energy Efficiency Rating				
Part Load COP	25%	50%	75%	100%
Ambient conditions	20°C	25°C	30°C	35°C
Weighting factor	0,20 (a)	0,36 (b)	0,32 (c)	0,12 (d)

UK summer 21°C DB (outdoor temperature), 16°C WB (indoor temperature)

ESEER calculation corresponds with below conditions and power input of indoor units is not included.
- Indoor temperature: 27°C DB / 19°C WB
- Outdoor temperature conditions

Part load ratio	25%	50%	75%	100%
Outdoor air temperature (°C DB)	20	25	30	35
Weighting coefficients	0,23	0,41	0,33	0,03

- Formula : 0,23 x $EER_{25\%}$ + 0,41 x $EER_{50\%}$ + 0,33 x $EER_{75\%}$ + 0,03 x $EER_{100\%}$.

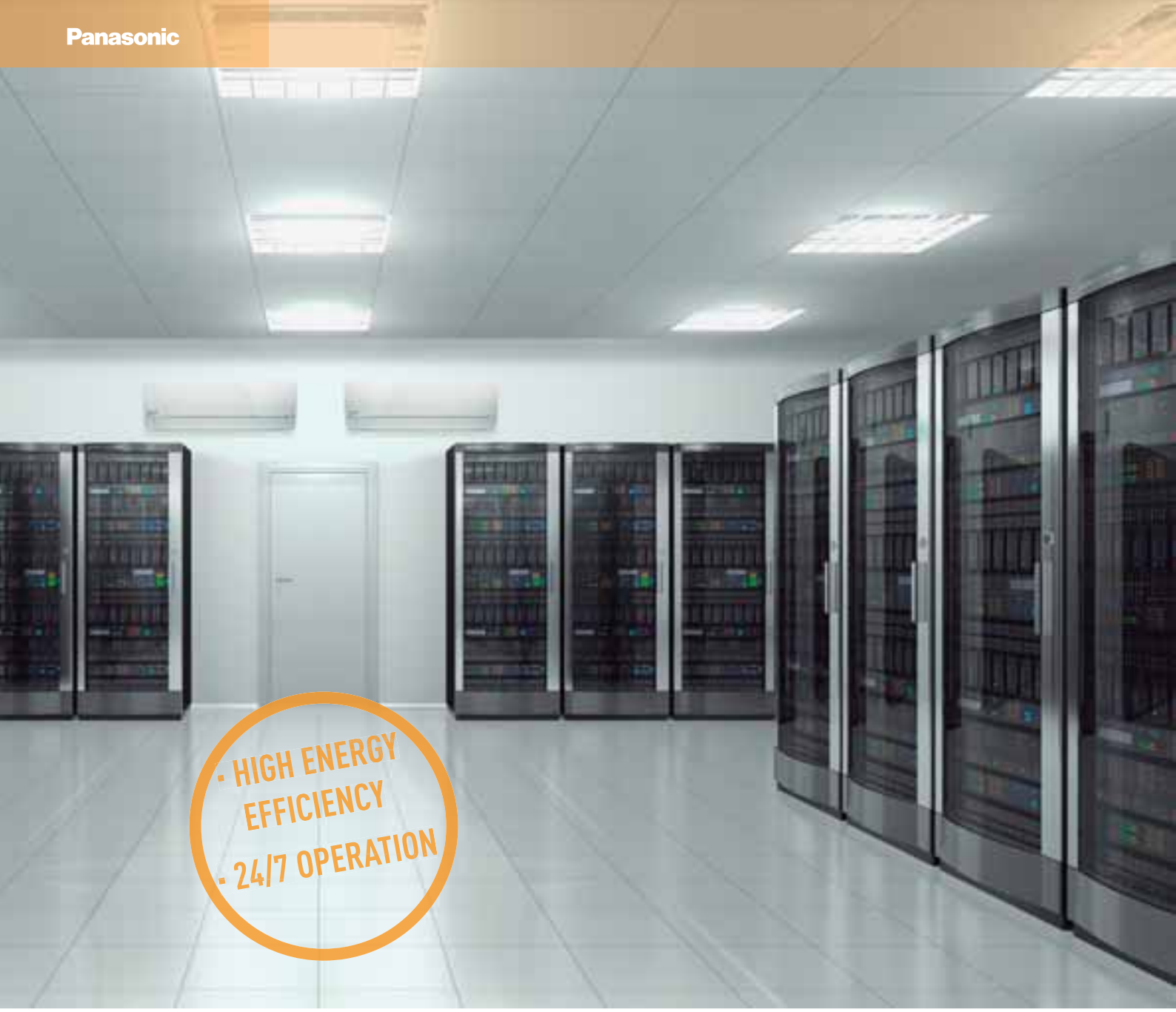





Solutions for server rooms

High efficiency products for 24/7 applications

Panasonic has developed a complete range of solutions for server rooms which efficiently protect your servers, keeping them at an appropriate temperature even when the outdoor temperature is below -20°C.

Key points

- From 2,5 kW to 5 kW with PKEA units
- From 5 kW to 25 kW with PACi units
- Backup function
- Redundancy function
- Alternative run function
- Error information by dry contact
- Operation even at -20°C outdoor temperature
- Excellent performance with excellent ESEER
- Product design for 24/7 operation

High efficiency all the year

On 24/7 operation, the performance of the air conditioning is a key factor. When the efficiency is high, the return on investment of such units is quickly reached.

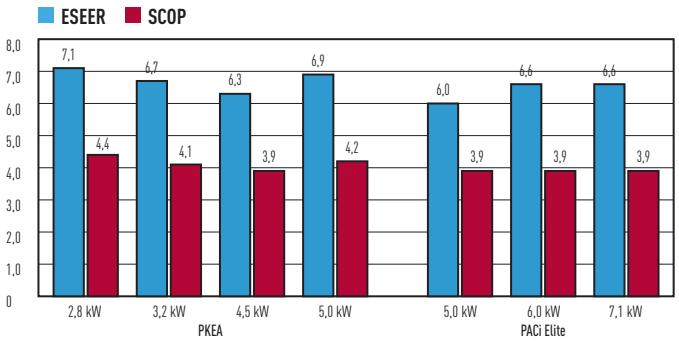

High durability for 24/7 operation

Indoor Fan. Cross-Flow-Fan

- High durability rolling bearings, large size (φ105mm) fan
- High efficiency blade
- Random pitch blade (low sound)

Compressor

DC2P Panasonic original compressor, with high efficiency and reliability.



Why is the Panasonic R2 Rotary Compressor so efficient?

1. **High Efficiency Motor** The premium silicon steel motor meets industry efficiency requirements.
2. **Improved Lubrication of High Volume Oil Pump** The extended, high volume oil pump in conjunction with a larger capacity oil reservoir provides superior lubrication.
3. **Accumulator has Larger Refrigerant Capacity** The larger accumulator accommodates generous refrigerant amounts needed in longer line length installations.

Interfaces to run 2 (for PKEA) or up to 3 (for PACi) units on Backup and alternative run

PAW-SERVER-PKEA for PKEA

The PAW-SERVER-PKEA server room interface manages redundancy and backup of two PKEA units with two different selectable modes:

- Plug and play by embedded redundancy and backup algorithm (no external signal needed. Further details please refer to operation manual)
- External (third party PLC) redundancy and backup management by dry contact

All settings are possible without the need for a computer connection. A special Energy Saving Mode is selectable by deep switch (available only in plug and play mode). The level of remote control input prohibition can be set when external management is by dry contact.

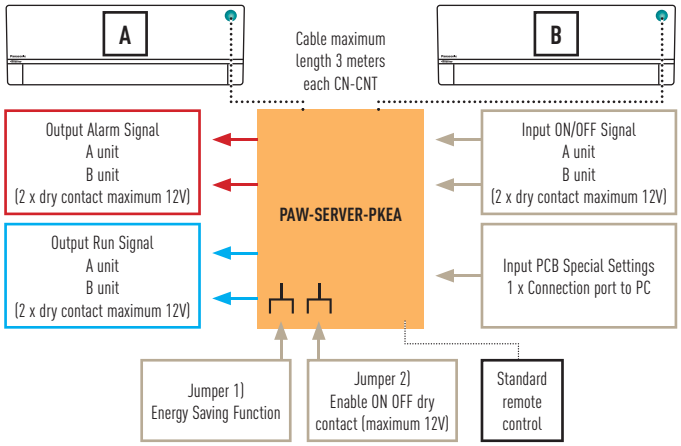

PAW-PACR3 for PACi and ECOi Range

PAW-PACR3, in combination with one PAW-T10V on each indoor unit, allows the redundant operation of 2 (or 3) PAC-i or VRF indoor units.
All units will be operated by programmable turns in order to achieve the same operating time (example turn every 8 hours with 24 hours).
If the room temperature exceeds a freely set value, the 2nd (or 3rd) unit will be switched ON and an alarm will be activated.
In combination with 1x PAW-T10V on each indoor unit, 2 or 3 PACi of ECOi can be programmed to run redundant.
Display and Settings:

- Possible to select next unit manually
- Possible to reset operation
- LED display shows operation status of the 2 or 3 units
- Operation status output
- Alarm LED and alarm output
- Temperature limit can be set
- Temperature hysteresis can be set
- Room temperature is displayed
- Time counter displayed

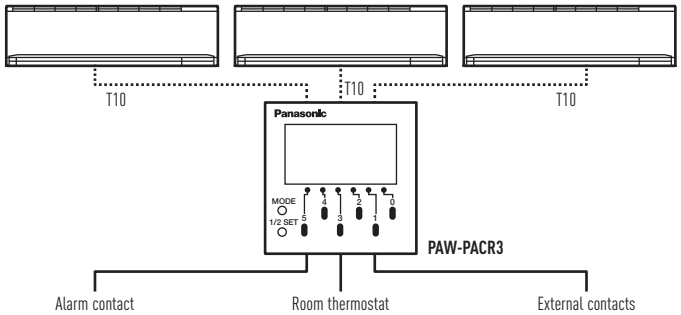





New wired remote controller with Econavi function control

Easy to use, attractive, clear design, with new demand control functions and energy consumption display! This useful feature makes this remote control unique!

Design
The new CZ-RTC3 wired remote control is ideal for integration into the most demanding interior architectures.
The touch panel features a very sleek and easy to use display, which with its compact display is only 120mm x 120mm x 16mm.

Display of information
The information is mainly based on pictograms to ensure easy understanding.
The minimal amount of text is available in 4 languages (English / German / French / Spanish / Italian).
The screen is back lit to enable reading even during the night.

Easy Access to the menus
With the new pictograms, the navigation, the selection and the settings are simple and easy to follow.

Key Functions
- Easy setup of the timer and settings of the indoor unit
- Energy consumption display (only available with PACi units with the reference ending with A)
- Limitation of the energy consumption (Demand control) by timer.

Basic function (Operation display & indication)

All functions are easily available on the remote controll.
• OFF/ON timer • Weekly timer • Quiet operation • Remote control sensor • Operation prohibit • Filter sign • Energy saving • Centralized control indication • Mode change prohibit • Automatic temperature return • Temperature range limitation • OFF remind • Schedule demand control • Ventilation • Out Function

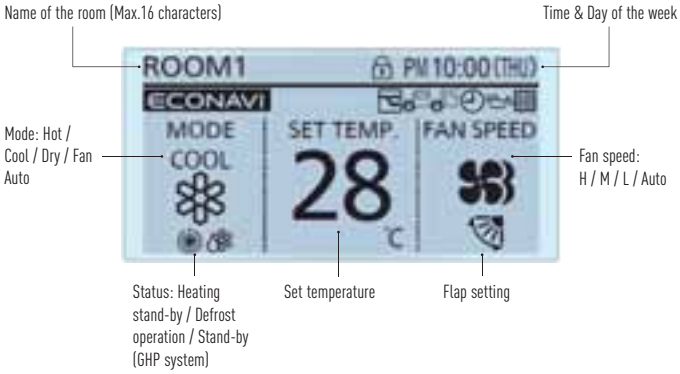

Easy operation and quick access to all menus

1. Set temperature will be selected, when any arrow button is touched.
2. Select the item (Mode or Fan speed) by left/right ◂▸ key.
3. Change the setting by up/down ▴▾ key.

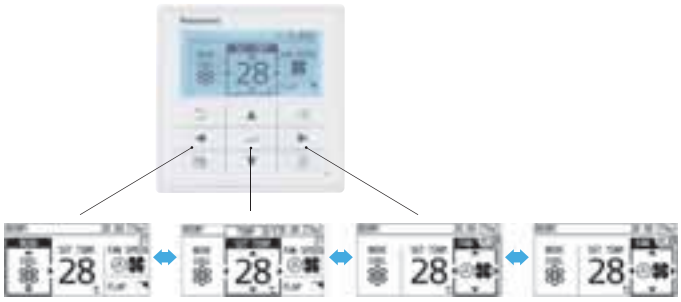

Example of easy access to the functions: Air direction setting

1. Select "Air direction" and press "determine" key.
2. Select the unit No. by up/down key.
3. Select the flap position by up/down key.
4. Press "Return" key to go back the Menu display.

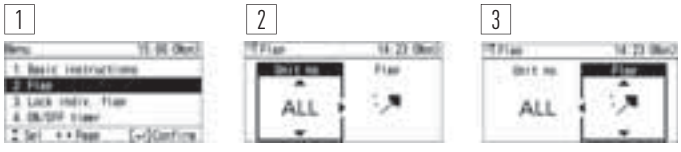

Example of easy access to the functions : Weekly timer setting

8 actions available per day. Total 56 actions per week can be set.
1. Weekly timer menu display
2. Setting for each day of the week
3. Timer program setting of the day



Example of easy access to the functions: Energy consumption monitoring display per day, week, month and year (only available with PACi units)

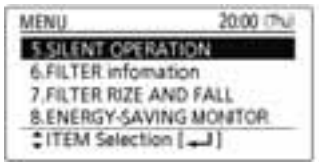

Menu selection: 3 types (Day/Week/Year)of display are available.

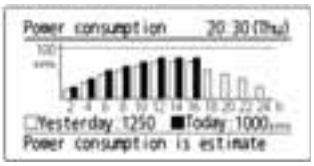

Daily Energy consumption: Data is shown with Yesterday's record.(Graph starts from 0 o'clock to 24 o'clock only.)

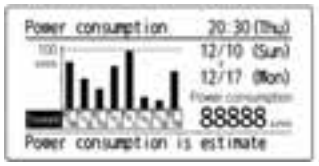

Weekly Energy consumption: Power consumption of each day of the week can be checked.

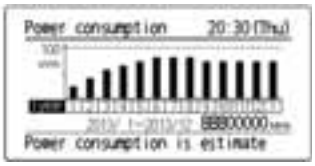

Annual Energy consumption: Power consumption of each month can be checked.

Functions available on the CZ-RTC3

Control item	Controllability	Indoor Units	
		All PACi	Only PACi ending on A
Basic Operation	Operation, Mode, Temperature setting, Airflow volume, Airflow direction	✔	✔
Timer function	Time display	✔	✔
	Easy ON/OFF timer	✔	✔
	Weekly Program timer	✔	✔
Energy saving	Outing function	✔	✔
	Temperature auto return	✔	✔
	Temperature setting range limitation	✔	✔
	OFF remind	✔	✔
	Energy saving mode	✔	✔
	Schedule demand control	–	✔
	Energy monitoring	–	✔
Maintenance	System failure information	–	✔
	Service contact registration	✔	✔
	Filter sign (rest time display) & Reset	✔	✔
	Auto-address, Test run	✔	✔
	Sensor value monitor	✔	✔
	Simple/Detail setting mode	✔	✔
Others	Key lock	✔	✔
	Ventilation fan control	✔	✔
	Display contrast adjustment	✔	✔
	Remote controller sensor	✔	✔
	Quiet operation mode	–	✔
	Prohibit setting control from Central controller	✔	✔

All specifications subject to change without notice.



Wired remote controller CZ-RTC3
with Econavi Sensor Control

Up to 28% energy savings (cooling)
ECONAVI



INCREASE EFFICIENCY BY 28%
INCREASE COMFORT

New Econavi Sensor

The all new Econavi Sensor detects presence in the room, and quietly adapts the PACi or VRF air conditioning system in order to improve comfort and maximise energy savings.

- Detects human activity and adjusts temperature by 2 degrees (up or down) to optimize comfort and efficiency
- If there is no activity detected for a set time, the Econavi will stop the unit or move to a new temperature previously set
- The Econavi device is installed independently of the indoor unit, and is located in the area best suited for detection

Applications

Saving Energy for Offices: if the air conditioning is left on after the last employee leaves the office, Econavi will automatically react, reducing or stopping the system.
Increased comfort in hotel rooms: when presence is detected in the room, the temperature is automatically adjusted to achieve best comfort.

Econavi function

- Analyses room activity: Human activities and human heat
- Modifies the capacity to adapt in real-time to the needs of the room

Key points

- Compatible with Cassette, Wall Mounted, Hide Away and Ceiling - Sensor - Improves efficiency - Better Comfort - Can be installed in the best place of the room for detection purposes.

Available in October 2014.

Human activity and presence detection

Activity detection		Presence detection	
HIGHER ACTIVITY	LOWER ACTIVITY	After 20 mins absence	After 3 hours absence
Cooling Set Temp. +/-0°C	Cooling Set Temp. +1°C	Cooling Set Temp. +2°C	Cooling Thermo OFF
Heating Set Temp. -1°C	Heating Set Temp. +/-0 °C	Heating Set Temp. -2°C	Heating Thermo OFF
	Each 2 min		After 3 hours set up can be change to stop or temp shift





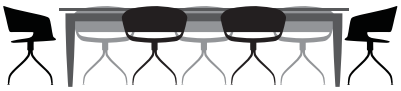

Sensor location image

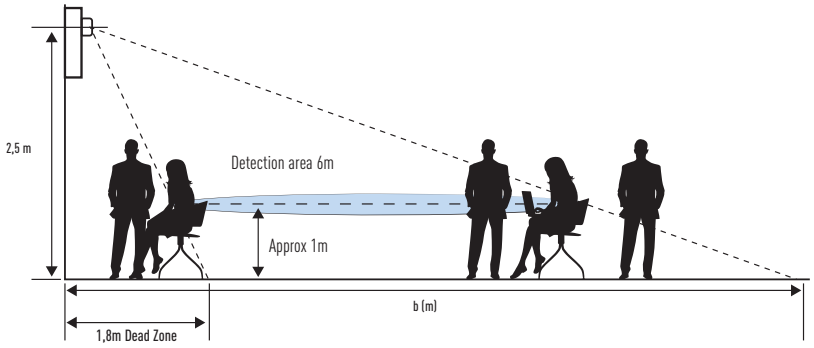

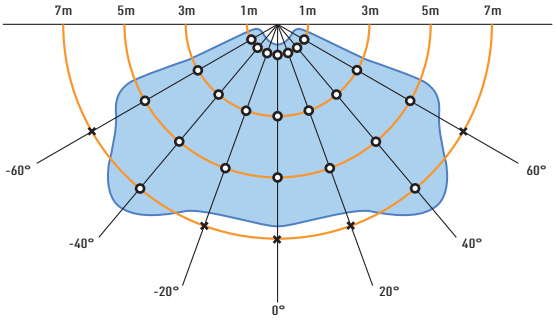

Human detection area (2,5m height angle 30°)

Model Evaluation (Laboratory Testing/Cooling Operation)

28% ENERGY SAVING

Test Method

To establish conditions for our field tests, because human movements and door open/close are random, we did not test on set conditions. To replicate typical conditions, we have fixed variable numbers (see below) and tested how ECONAVI's temperature control function contributes to energy efficiency level.

For each temperature setting, we have tested and compared power consumption at three-hourly intervals.

INTEGRAL POWER CONSUMPTION COOLING OPERATION

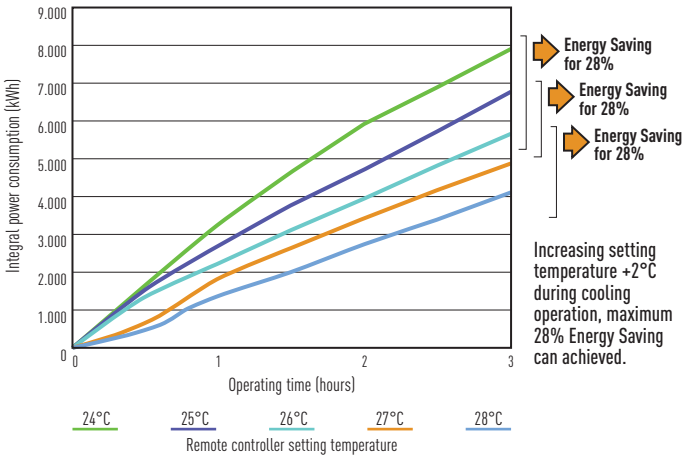

Increasing setting temperature +2°C during cooling operation, maximum 28% Energy Saving can achieved.

Test Condition

- Testing location: New 6,0HP testing room / 29m²
- Test sample remote controller setting: Setting temperature: Cooling 24 ~28°C / Fan Speed: Hi
- Measured integral power consumption every 30 minutes and compare (including thermo OFF period)
- Room temperatures / 19°C, outdoor temperature 35/24°C (cooling nominal capacity) cool down the room for 1 hour and keep the room temperature stable. After the room temperature become stable, turn OFF indoor unit refrigerator and heater and only operate circulator and continue cooling down the room by the unit (operating circulator to avoid temperature variation)

TEST SAMPLE TESTING LOCATION: BUILDING 1.460 NEW 6,0HP TESTING ROOM

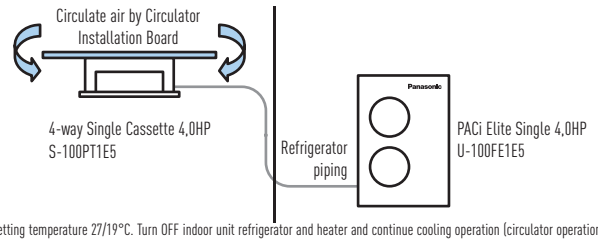

Indoor setting temperature 27/19°C. Turn OFF indoor unit refrigerator and heater and continue cooling operation (circulator operation ON).



PACi Standard and Elite: indoor units

360° Air Flow, 4 Way 90x90 Cassette PACi Standard and Elite

4 Way 90x90 Cassette. Wide & Comfortable Airflow

This proprietary design provides a wide and very comfortable airflow. The cassette's wide-angle discharge outlets and flaps are larger in the middle, featuring a shape that was selected based on geometrics and testing of actual prototype units. Air coming out of the center of the discharge outlets travels farther. From the sides of each outlet, where the openings are larger, airflow spreads out to reach the corners of the room. Air is discharged across a wide area from the four sides of the unit. The curves on the room temperature distribution graph expand gently out through 360° in a circle centered on the indoor unit.

HIGHER EFFICIENCY SPLIT FIN.
Improved heat-transfer coefficient due to adoption of high efficiently grooved heat exchanger tube.

HIGH-EFFICIENT & SILENT TURBO FAN.
The newly developed larger fan chassis and optimised design of the airflow path has resulted in increased air volume and quieter performance.

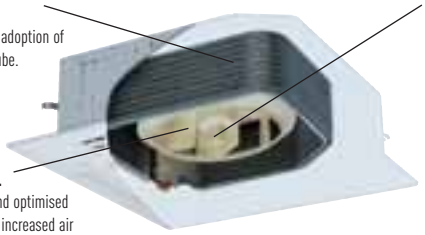

NEW DC-FAN MOTOR.
Optimum airflow is achieved by a new DC-fan motor with independent control.

INDIVIDUAL FLAP CONTROL.
Flexible Air flow direction control by individual flap control is possible. 4 Flaps can be controlled individually by setting on wired timer remote controller. It can make more flexible Air-flow control to be matched to several demands in a room.

360° Air Flow for improved comfort

By redesigning the air-outlet and flap, Soft & 3D air flow circulates whole space and provides even temperature distribution in the room.

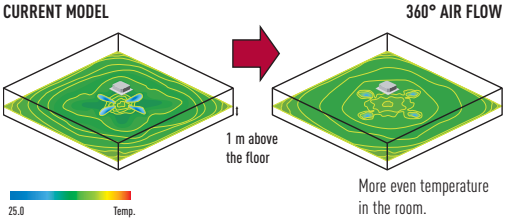

Simulated condition: Floor area: 225 m². Ceiling height: 3 m, Unit 12.5 kW type.

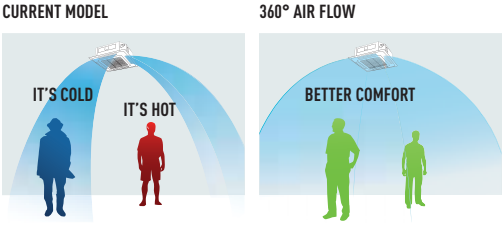

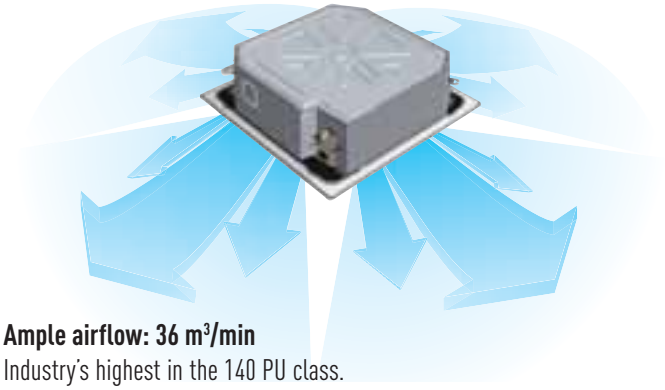

Ample airflow: 36 m³/min
Industry's highest in the 140 PU class.

Flexible 3D air-flow control

Comfort air flow control & proper energy use. Flexible Air flow direction control by individual flap control:

- 4 Flaps can be controlled individually (by standard wired remote controller*).
- Versatile air flow control to cover a wide variety of demands.

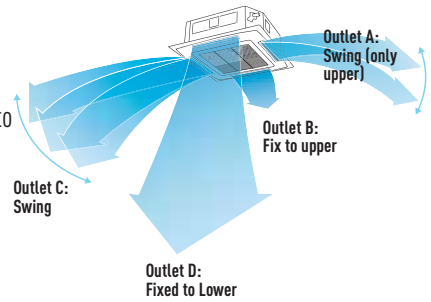

* Pre-setting is required for this function at System Test-run procedure.

High-Ceiling Installation (Up to 5 m for 100 PU and higher models)

The units can be installed in rooms with high ceilings, where they provide ample floor-level heating in the winter. (See ceiling height guidelines below.)

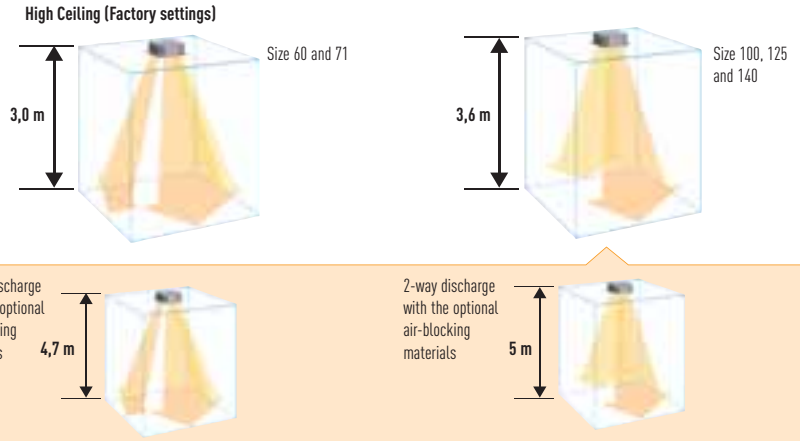

Ceiling height guidelines

Settings¹	4 - way discharge			3 - way discharge (optional air - blocking materials)	2 - way discharge (optional air - blocking materials)²
	Factory settings¹	High ceiling setting¹	High ceiling setting²		
Indoor unit: 60PU-71PU	3,0	3,3	3,6	3,8	4,2
Indoor unit: 100PU, 125PU, 140PU	3,6	3,9	4,5	4,7	5,0

1) When using the unit in a configuration other than the factory settings, it is necessary to make settings on site to increase airflow. 2) Use air-blocking materials (CZ-CFU2) to completely block two discharge outlets for 2-way airflow.

Easy Maintenance and Cleaning

The flap can be removed easily for washing with water.



Lighter and Slimmer, Easier Installation

A lightweight unit at 24 kg, the unit is also very slim with a height of only 256 mm, making installation possible even in narrow ceiling voids.

A Drain Height of Approx. 850 mm from the Ceiling Surface

The drain height can be increased by approximately 350 mm over the conventional value by using a high-lift drain pump, and long horizontal piping is possible.

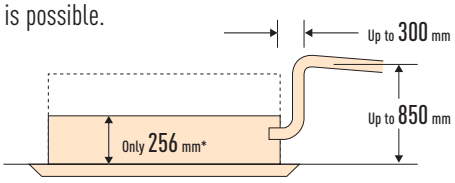

Drain Pump of about 850 mm from the ceiling surface

* For 6,0kW / 7,1kW

Low-Profile 33,5 mm Panel

The square panel integrates seamlessly with the ceiling. Discharge outlets close when the unit is stopped.



Dust Prevention

Wide direction air discharge by outlet design.
The Circle Flow Flap and re-designed air-outlet eliminate airflow along recessed parts of the ceiling which reduces contamination. If air flows only along these recessed parts, they will quickly become dirty. The new, improved air outlet design therefore greatly reduces dirt accumulation.

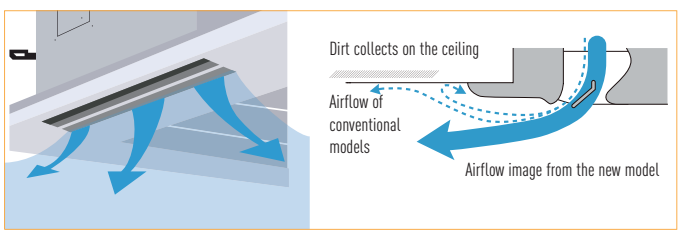



PACi Standard and Elite: indoor units

New 4-Way 60x60 Cassette

Lighter and slimmer, easier installation
Lightweight and very slim which makes installation possible even in narrow ceilings.

A drain height of approx. 850 mm from the ceiling surface
The drain height can be increased by approx. 350 mm over the conventional value by using a high-lift drain pump, and long horizontal piping is possible.

Significant reduction of power consumption by using highly developed DC fan motors with variable speed, special heat exchangers, etc.
Convenient cleaning. The flap can be removed easily for washing.

Wall Mounted

The unit's compact design and flat face ensure discreet installation, even in a small space.

Washable front panel.
The indoor unit's front panel can be easily removed and washed for trouble-free cleaning.

Closed discharge port
When the unit is turned OFF, the flap closes completely to prevent dust getting into the unit and to keep the equipment clean.

Quiet operation
These units are among the quietest in the industry, making them ideal for hotels and hospitals.

Smooth and durable design
The sleek, compact design ensures a discreet installation - even where space is limited.

Piping outlet in three directions
With three options for pipe outlets-rear, right and left - installation is made easy.

Air distribution is altered depending on the operational mode of the unit

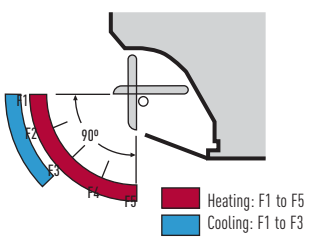

Low Static Pressure Hide Away (PN Type)

Ultra-slim profile: 250 mm height for all models.



Discharge air temperature control

- Possible to reduce cold drafts at heating operation.

Cold Drafts Reduction at Heating

- Accurate temperature measurement by E2 sensor to reduce cold drafts at heating.

Before spec-in, please consult with an authorized Panasonic dealer.

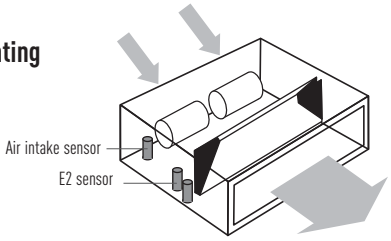

System Example

An inspection port (450 mm x 450 mm or more) is required at the control-box side of the indoor unit body.

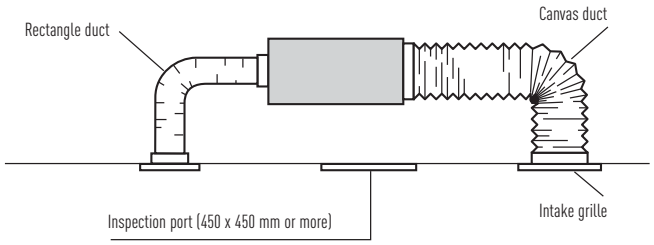

Ceiling

Further comfort improvement

The wide air discharge opening expands the air flow to the left and the right. The unpleasant feeling caused when the air flow directly hits the human body is prevented by the "Draft prevention position", which changes the swing width, so that the degree of comfort is increased.

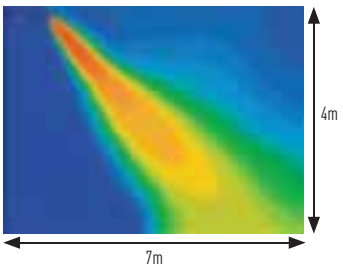

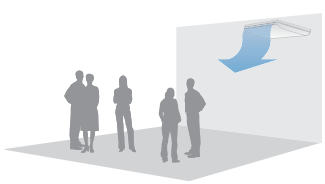

Further comfort improvement with airflow distribution

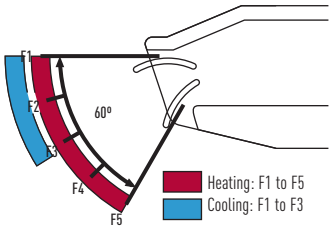

Air distribution is altered depending on the operational mode of the unit

High Static Pressure Hide Away (PF Type)

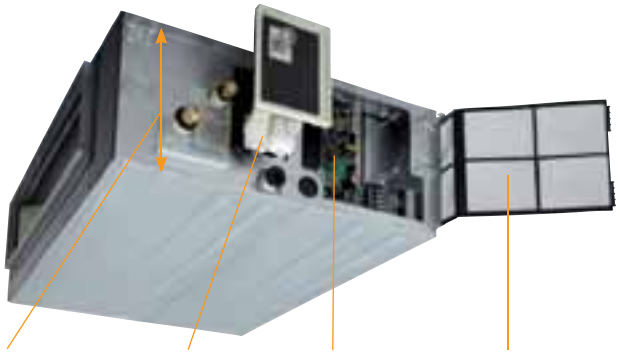

Standardized height of 290 mm for all models
Height standardization enables easy and uniform installation for models with different capacities.

Built-in Drain pump (DC motor pump)

External electrical equipment box makes maintenance easy
P-link PCB

- Built-in filter
- Side removable filter

The static pressure outside the unit can be increased up to 150 Pa.

Type	60	71	100	125	140
Standard	70 Pa	70 Pa	100 Pa	100 Pa	100 Pa
Maximum available setting	150 Pa	150 Pa	150 Pa	150 Pa	150 Pa

More powerful drain pump

Using a high-lift drain pump, drain piping can be elevated up to 785 mm from the base of the unit.

Air inlet

The unit features air inlet on one side, air outlet on the other side. The air inlet filter can be pulled out from the side of the unit and can be folded. Easy access if through the maintenance opening.



When air inlet duct (field supplied) is connected on suction side, remove the filter, frame and insulation materials on both sides of the unit. Connect the duct on the suction side of the unit by using prepared holes on the unit.

Air outlet site

A rectangular duct flange for the air outlet is fitted as standard. Round outlet flange kits are available as an optional accessory kit.

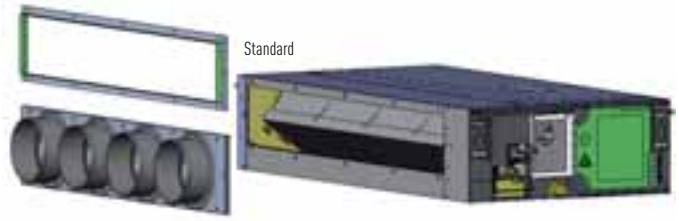

Round flange : CZ-160DAF2 φ200 outlet frange x 4 ports

Circle duct flange (option)

Number of exits with diameters	Model Code
2 x Ø 200	CZ-56DAF2 (2 SA outlet)
3 x Ø 200	CZ-90DAF2 (3 SA outlet)
4 x Ø 200	CZ-160DAF2 (4 SA outlet)

Range of Commercial units

Wall Mounted for professional applications	2,8 kW	3,2 kW	4,5 kW	5,0 kW
Wall Mounted PKEA*	 CS-E9PKEA	 CS-E12PKEA	 CS-E15PKEA	 CS-E18PKEA

* PKEA indoor units are only compatible with PKEA Outdoor Units.

Indoor Units PACi Standard And Elite	3,6 kW	4,5 kW	5,0 kW	6,0 kW
Wall PACi Inverter+ NEW	 S-36PK1E5A	 S-45PK1E5A	 S-50PK1E5A	 S-60PK1E5A
4 - Way 60x60 Cassette PACi Inverter+ (for Twin combinations) NEW	 S-36PY2E5A	 S-45PY2E5A	 S-50PY2E5A	
4 Way 90x90 Cassette PACi Inverter+ NEW	 S-36PU1E5A	 S-45PU1E5A	 S-50PU1E5A	 S-60PU1E5A
Low Static Pressure Hide Away PACi Inverter+ NEW	 S-36PN1E5A	 S-45PN1E5A	 S-50PN1E5A	 S-60PN1E5A
High Static Pressure Hide Away PACi Inverter+ NEW	 S-36PF1E5A	 S-45PF1E5A	 S-50PF1E5A	 S-60PF1E5A
Ceiling PACi Inverter+ NEW	 S-36PT2E5A	 S-45PT2E5A	 S-50PT2E5A	 S-60PT2E5A
High Static Pressure Hide Away 20,0 - 25,0 kW PACi Inverter+ NEW				
AHU Kit NEW			 PAW-280PAH2	 PAW-280PAH2
Air Curtain with DX Coil Jet-Flow				
Air Curtain with DX Coil Standard				

1) Available from November 2014. * The indoor units from 3,6 to 5,0 kW are only available only for Twin, Triple and Doble-Twin combinations.

OUTDOOR UNITS PACi STANDARD AND ELITE			5,0 kW	6,0 kW
PACi STANDARD				 U-60PEY1E5 [I]
PACi ELITE			 U-50PE1E5 [I]	 U-60PE1E5A [I]

[I] Single Phase [III] Three Phase

	7,1 kW	10,0 kW	12,5 kW	14,0 kW	20,0 kW	25,0 kW
	 S-71PK1E5A	 S-100PK1E5A				
	 S-71PU1E5A	 S-100PU1E5A	 S-125PU1E5A	 S-140PU1E5A		
	 S-71PN1E5A	 S-100PN1E5A	 S-125PN1E5A	 S-140PN1E5A		
	 S-71PF1E5A	 S-100PF1E5A	 S-125PF1E5A	 S-140PF1E5A		
	 S-71PT2E5A	 S-100PT2E5A	 S-125PT2E5A	 S-140PT2E5A		
					 S-200PE1E8A S-200PE2E5[1]	 S-250PE1E8 S-250PE2E5[1]
	 PAW-280PAH2	 PAW-280PAH2	 PAW-280PAH2	 PAW-280PAH2	 PAW-280PAH2	 PAW-280PAH2
		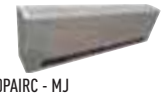 PAW-10PAIRC - MJ		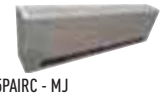 PAW-15PAIRC - MJ	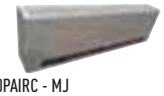 PAW-20PAIRC - MJ	
		 PAW-10PAIRC - MS			 PAW-20PAIRC - MS	

	7,1 kW	10,0 kW	12,5 kW	14,0 kW	20,0 kW	25,0 kW
	 U-71PEY1E5 [I]	 U-100PEY1E5 [I] // U-100PEY1E8 [III]	 U-125PEY1E5 [I] // U-125PEY1E8 [III]	 U-140PEY1E8 [III]		
	 U-71PE1E5A [I] // U-71PE1E8A [III]	 U-100PE1E5A [I] // U-100PE1E8A [III]	 U-125PE1E5A [I] // U-125PE1E8A [III]	 U-140PE1E5A [I] // U-140PE1E8A [III]	 U-200PE1E8 [III]	U-250PE1E8 [III]

WALL MOUNTED PKEA

Complete line-up with high efficiency even at -15°C

This Wall Mounted air conditioner is especially designed for professional applications such as computer rooms where cooling inside the room is necessary even when the outside temperature is low. Furthermore this air conditioner has an automatic changeover system, in order to maintain the inside temperature even when sharp outside temperature changes occur.

- SERVER ROOM SOLUTION WITH THE HIGHEST EFFICIENCY OF THE MARKET
- 24/7 OPERATION



ESEER and SCOP: For KIT-E9-PKEA.

			Single Phase			
			2,8 kW	3,2 kW	4,5 kW	5,0 kW
KIT			**KIT-E9-PKEA**	**KIT-E12-PKEA**	**KIT-E15-PKEA**	**KIT-E18-PKEA**
Indoor			**CS-E9PKEA**	**CS-E12PKEA**	**CS-E15PKEA**	**CS-E18PKEA**
Outdoor			**CU-E9PKEA**	**CU-E12PKEA**	**CU-E15PKEA**	**CU-E18PKEA**
Cooling capacity	Nominal (Min-Max)	kW	2,50 (0,85-3,00)	3,50 (0,85-4,00)	4,20 (0,98-5,00)	5,00 (0,98-6,00)
	Nominal (Min-Max)	kCal/h	2.150 (730-2.580)	3.010 (730-3.440)	3.610 (840-4.300)	4.300 (840-5.160)
Cooling capacity at -10°C	Nominal	kW	2,63	3,69	5,04	6,00
EER at -10°C	Nominal	Energy Saving	7,19	5,96	6,01	6,00
Cooling capacity at -20°C	Nominal	kW	2,61	3,66	4,06	5,82
EER at -20°C	Nominal	Energy Saving	6,71	5,56	4,39	5,39
ESEER	**Nominal**	**Energy Saving**	**7,1** A++	**6,7** A++	**6,3** A++	**6,9** A++
Pdesign		kW	2,5	3,5	4,2	5,0
Power input Cooling	Nominal (Min-Max)	kW	0,515 (0,170-0,710)	0,870 (0,170-1,120)	1,200 (0,280-1,580)	1,440 (0,280-1,990)
Annual electricity consumption (cooling) [1]		kWh/a	123	183	233	254
Heating capacity	Nominal (Min-Max)	kW	3,40 (0,85-5,40)	4,00 (0,85-6,60)	5,40 (0,98-7,10)	5,80 (0,98-8,00)
	Nominal (Min-Max)	kCal/h	2.920 (730-4.640)	3.440 (730-5.680)	4.640 (840-6.110)	4.990 (840-6.880)
Heating capacity at -7°C	Nominal	kW	3,33	4,07	4,10	4,98
SCOP	**Nominal**	**Energy Saving**	**4,4** A+	**4,1** A+	**3,9** A	**4,2** A+
Pdesign at -10 °C		kW	2,8	3,6	3,6	4,4
Power input Heating	Nominal (Min-Max)	kW	0,700 (0,165-1,310)	0,920 (0,165-1,820)	1,440 (0,340-2,190)	1,520 (0,340-2,570)
Annual electricity consumption (heating) [1]		kWh/a	891	1.229	1.292	1.467
Indoor Unit						
Power source		V	230	230	230	230
Recommended Fuse		A	16	16	16	16
Connection indoor / outdoor		mm	4 x 1,5	4 x 1,5	4 x 1,5	4 x 2,5
Current (Nominal)	Cooling / Heating	A	2,5 / 3,3	4,0 / 4,2	5,4 / 6,5	6,4 / 6,8
Max. Current		A	7,8	8,4	9,6	11,3
Air Volume	Cooling / Heating	m³/h	798 / 876	816 / 882	846 / 900	1.074 / 1.158
Moisture removal volume		l/h	1,5	2,0	2,4	2,8
Sound pressure level [2]	Cooling (Hi / Lo / S-Lo)	dB(A)	39 / 26 / 23	42 / 29 / 26	43 / 32 / 29	44 / 37 / 34
	Heating (Hi / Lo / S-Lo)	dB(A)	40 / 27 / 24	42 / 33 / 29	43 / 35 / 29	44 / 37 / 34
Sound power level	Cooling / Heating (Hi)	dB	55 / 56	58 / 58	59 / 59	60 / 60
Dimensions	H x W x D	mm	295 x 870 x 255	295 x 870 x 255	295 x 870 x 255	295 x 1.070 x 255
Net weight		kg	10	10	10	13
Air purifier filter						
Outdoor Unit						
Air Volume	Cooling / Heating	m³/h	1.878 / 1.782	1.974 / 1.926	2.052 / 1.980	2.352 / 2.274
Sound pressure level [2]	Cooling / Heating (Hi)	dB(A)	46 / 47	48 / 50	46 / 46	47 / 47
Sound power level	Cooling / Heating (Hi)	dB	61 / 62	63 / 65	61 / 61	61 / 61
Dimensions [3]	H x W x D	mm	622 x 824 x 299	622 x 824 x 299	695 x 875 x 320	695 x 875 x 320
Net weight		kg	36	36	45	46
Piping connections	Liquid pipe / Gas pipe	inch (mm)	1/4" (6,35) / 3/8" (9,52)	1/4" (6,35) / 3/8" (9,52)	1/4" (6,35) / 1/2" (12,70)	1/4" (6,35) / 1/2" (12,70)
Refrigerant loading	R410A	kg	1.100	1.100	1,060	1,240
Elevation difference (in/out) [4]	Max	m	5	5	15	15
Piping length	Min / Max	m	3-15	3-15	3-15	3-20
Precharge length	Max	m	7,5	7,5	7,5	7,5
Additional charge		g/m	20	20	20	20
Operating range	Cooling Min / Max	°C	-15 / +43	-15 / +43	-15 / +43	-15 / +43
	Heating Min / Max	°C	-15 / +24	-15 / +24	-15 / +24	-15 / +24

Rating Conditions: Cooling Indoor 27°C DB / 19°C WB. Cooling Outdoor 35°C DB / 24°C WB. Heating Indoor 20°C DB. Heating Outdoor 7°C DB / 6°C WB. (DB: Dry Bulb; WB: Wet Bulb)
Rating Conditions for cooling capacity at low temperature: Cooling Indoor 27°C DB / 19°C WB. Cooling Outdoor 0°C DB / -10°C WB.

1) The annual energy consumption is calculated in accordance with the ErP directive. 2) The Sound pressure level of the units shows the value measured of a position 1 meter in front of the main body and 1.5 m from the ground The sound pressure is measured in accordance with Eurovent 6/C/006-97 specification. 3) Add 70 mm for piping port. 4) When installing the outdoor unit at a higher position than the indoor unit.
Recommended fuse for the indoor 3A.
Specifications subject to change without notice.
For detailed information about ErP, please visit our page http://www.ptc.panasonic.eu





Included on the kit
Timer remote controller

KIT-E9-PKEA // KIT-E12-PKEA // KIT-E15-PKEA // KIT-E18-PKEA

Technical Focus

- New! This units can be installed on R22 pipings
- Designed for 24h/7d a week operation
- Highly efficient even at -15°C
- High durability rolling bearings
- Additional piping sensors to prevent freezing

Outdoor

- Cooling even when ambient temperature is as low as -15°C
- Electronic expansion valve (accurate sub-cooling and adjustable refrigerant flow)
- Outdoor DC fan motor to provide flexible air-flow to ensure optimum condensation pressure (works on outdoor pipe temperature sensor)

Interface option to manage server room operation

The PAW-SERVER-PKEA server room interface manages redundancy and backup of two PKEA units with two different selectable modes:

- Plug and play by embedded redundancy and backup algorithm (no external signal needed. Further details please refer to operation manual)
- External (third party PLC) redundancy and backup management by dry contact

All settings are possible without the need for a computer connection.
A special Energy Saving Mode is selectable by deep switch (available only in plug and play mode).
The level of remote control input prohibition can be set when external management is by dry contact.

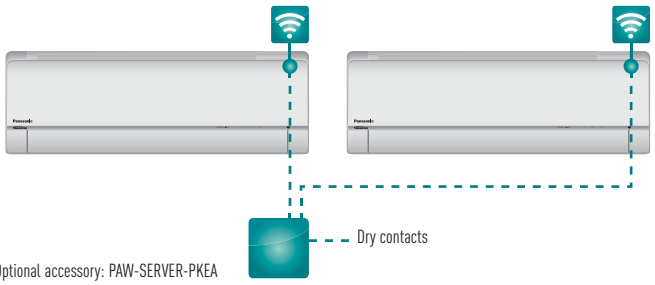

Optional accessory: PAW-SERVER-PKEA



CU-E9PKEA
CU-E12PKEA



CU-E15PKEA
CU-E18PKEA

WALL MOUNTED
PACi STANDARD AND ELITE INVERTER+

New Wall Mounted PACi. The extension of the range to include a 10 kW unit allows for many more applications such as studios, gyms, high ceiling areas and even computer server rooms.

Technical Focus

- **New!** 10.0 kW capacity unit
- Flat face design for modern appearance
- Compact design offers over 15% reduction in overall size
- Washable front panel
- DC FAN for better efficiency and control
- Three directional piping outlet
- Easy connection and control of external fan or ERV using the connector PAW-FDC on the indoor unit PCB. The external device can be control by the remote control of the Panasonic indoor unit

STANDARD

NEW

			Single Phase			Three Phase
			6,0 kW	7,1 kW	10,0 kW	10,0 kW
KIT			**KIT-60PKY1E5A***	**KIT-71PKY1E5A***	**KIT-100PKY1E5A***	**KIT-100PKY1E8A***
Indoor			**S-60PK1E5A**	**S-71PK1E5A**	**S-100PK1E5A**	**S-100PK1E5A**
Outdoor			**U-60PEY1E5**	**U-71PEY1E5**	**U-100PEY1E5**	**U-100PEY1E8**
Timer remote controller			**CZ-RTC2**	**CZ-RTC2**	**CZ-RTC2**	**CZ-RTC2**
Cooling capacity	Nominal (Min - Max)	kW	6,0 (2,0 - 7,0)	7,1 (2,0 - 7,7)	9,0 (2,7 - 9,7)	9,0 (2,7 - 9,7)
ESEER		**W/W**	**5,4 A**	**5,1 A**	**5,8 A+**	**5,7 A+**
Pdesign		kW	6,0	7,1	9,0	9,0
Power input cooling	Nominal (Min - Max)	kW	1,860 (0,325 - 2,750)	2,450 (0,325 - 3,000)	3,370 (0,530 - 3,800)	3,370 (0,530 - 3,800)
Annual energy consumption (ErP) [1]		kWh/a	389	487	543	553
Heating capacity	Nominal (Min - Max)	kW	6,0 (1,8 - 7,0)	7,1 (1,8 - 8,1)	9,0 (2,1 - 10,5)	9,0 (2,1 - 10,5)
Heating capacity at -7°C [2]	Nominal	kW	4,39	4,32	7,22	7,22
SCOP		**W/W**	**3,9 A**	**3,9 A**	**3,8 A**	**3,8 A**
Pdesign at -10°C		kW	6,0	6,0	9,0	9,0
Power input heating	Nominal (Min - Max)	kW	1,500 (0,275 - 2,200)	1,900 (0,275 - 2,550)	2,430 (0,410 - 3,000)	2,430 (0,410 - 3,000)
Annual energy consumption (ErP) [1]		kWh/a	2154	2154	3.316	3.316
Indoor unit						
Air volume	Cooling (Hi / Med / Lo)	m³/h	1.080 / 870 / 690	1.080 / 870 / 690	1.140 / 990 / 780	1.140 / 990 / 780
	Heating (Hi / Med / Lo)	m³/h	1.080 / 870 / 690	1.080 / 870 / 690	1.140 / 990 / 780	1.140 / 990 / 780
Moisture removal volume		l/h	3,4	4,2	5,4	5,4
Sound pressure level [3]	Cooling (Hi / Med / Lo)	dB(A)	47 / 44 / 40	47 / 44 / 40	49 / 45 / 41	49 / 45 / 41
	Heating (Hi / Med / Lo)	dB(A)	47 / 44 / 40	47 / 44 / 40	49 / 45 / 41	49 / 45 / 41
Sound power level	Cooling (Hi)	dB	64	64	66	66
	Heating (Hi)	dB	64	64	66	66
Dimensions	H x W x D	mm	300 x 1.065 x 230	300 x 1.065 x 230	300 x 1.065 x 230	300 x 1.065 x 230
Net weight		kg	14,5	14,5	14.5	14.5
Outdoor unit						
Power source		V	220 / 230 / 240	220 / 230 / 240	220 / 230 / 240	380 / 400 / 415
Recommended fuse		A	20	20	25	16
Connection		mm²	2,5	2,5	4,0	2,5
Current	Cooling	A	8,80 / 8,50 / 8,25	11,7 / 11,3 / 10,9	16,0 / 15,3 / 14,6	5,40 / 5,15 / 4,95
	Heating	A	7,05 / 6,80 / 6,60	9,00 / 8,70 / 8,40	11,2 / 10,8 / 10,4	3,85 / 3,65 / 3,55
Air volume	Cooling / Heating	m³/h	1.800 / 2.100	2.340 / 2.340	4.560 / 4.020	4.560 / 4.020
Sound pressure level	Cooling / Heating (Hi)	dB(A)	46 / 50	50 / 52	54 / 54	54 / 54
Sound power level	Cooling / Heating (Hi)	dB	65 / 69	70 / 70	70 / 70	70 / 70
Dimensions	H x W x D	mm	569 x 790 x 285	569 x 790 x 285	996 x 940 x 340	996 x 940 x 340
Net weight		kg	42	42	73	73
Piping connections	Liquid pipe	Inch (mm)	3/8 (9,52)	3/8 (9,52)	3/8 (9,52)	3/8 (9,52)
	Gas pipe	Inch (mm)	5/8 (15,88)	5/8 (15,88)	5/8 (15,88)	5/8 (15,88)
Refrigerant loading	R410A	kg	1,7	1,7	2,60	2,60
Elevation difference (in/out) [4]	Max	m	30	30	30	30
Piping length	Min / Max	m	5 / 50	5 / 50	5 / 50	5 / 50
Precharge length	Max	m	20	20	30	30
Additional charge		g/m	40	40	50	50
Operating range	Cooling Min / Max	°C	-10 / +43	-10 / +43	-10 / +43	-10 / +43
	Heating Min / Max	°C	-15 / +24	-15 / +24	-15 / +24	-15 / +24

Rating Conditions: Cooling Indoor 27°C DB / 19°C WB. Cooling Outdoor 35°C DB / 24°C WB. Heating Indoor 20°C DB. Heating Outdoor 7°C DB / 6°C WB. (DB: Dry Bulb; WB: Wet Bulb). // Specifications subject to change without notice.
1) The annual consumption(ErP) is calculated by formula determined by ErP regulation. 2) Heating capacity is calculated including defrost factor correction. 3) The Sound pressure level of the units shows the value measured of a position 1 meter in front of the main body and 1,5 m from the ground. The sound pressure is measured in accordance with Eurovent 6/C/006-97 specification. 4) When installing the outdoor unit at a higher position than the indoor unit. // Recommended fuse for the indoor 3A. // * Available from June 2014.
For detailed information about ErP, please visit our page http://www.ptc.panasonic.eu

STANDARD

Internet Control Ready – INTERNET CONTROL
Energy saving – INVERTER+
5,40 A SEER – SEASONAL ENERGY EFFICIENCY RATIO
3,90 A SCOP – SEASONAL COEFFICIENT OF PERFORMANCE
Down to -10°C in cooling mode – OUTDOOR TEMPERATURE
Down to -15°C in heating mode – OUTDOOR TEMPERATURE
Easy control by BMS – CONNECTIVITY
Possible to use on R22 pipings – R22 RENEWAL
5 year compressor warranty



U-60PEY1E5
U-71PEY1E5
U-100PEY1E5 U-100PEY1E8

INTERNET CONTROL READY: Optional. ESEER and SCOP: For KIT-60PKY1E5A.

HIGH HEATING CAPACITY AT -7°C





Optional Controller
Wired remote controller
CZ-RTC3



Optional Controller
Timer remote controller
CZ-RTC2



Optional Controller
Wireless remote controller
CZ-RWSK2



Optional Controller
Simplified remote controller
CZ-RE2C2

Compatible with all Panasonic connectivity solutions. For detailed information go to the VRF Control Systems section.

ELITE

			Single Phase				Three Phase	
						NEW		NEW
			5,0 kW	6,0 kW	7,1 kW	10,0 kW	7,1 kW	10,0 kW
KIT			KIT-50PK1E5A*	KIT-60PK1E5A*	KIT-71PK1E5A*	KIT-100PK1E5A**	KIT-71PK1E8A*	KIT-100PK1E8A**
Indoor			S-50PK1E5A	S-60PK1E5A	S-71PK1E5A	S-100PK1E5A	S-71PK1E5A	S-100PK1E5A
Outdoor			U-50PE1E5	U-60PE1E5A	U-71PE1E5A	U-100PE1E5A	U-71PE1E8A	U-100PE1E8A
Timer remote controller			CZ-RTC2	CZ-RTC2	CZ-RTC2	CZ-RTC2	CZ-RTC2	CZ-RTC2
Cooling capacity	Nominal (Min - Max)	kW	5,0 (1,5 - 5,6)	6,0 (2,5 - 7,1)	7,1 (2,5 - 8,0)	9,5 (3,3 - 10,5)	7,1 (3,2 - 8,0)	9,5 (3,3 - 10,5)
ESEER		W/W	6,0 A+	6,6 A++	6,6 A++	6,2 A++	6,1 A++	6,0 A+
Pdesign		kW	5,0	6,0	7,1	9,5	7,1	9,5
Power input cooling	Nominal (Min - Max)	kW	1,560 (0,260 - 2,250)	1,560 (0,450 - 2,000)	2,090 (0,450 - 2,650)	2,920 (0,840 - 3,400)	2,090 (0,560 - 2,650)	2,920 (0,840 - 3,400)
Annual energy consumption (ErP) [1]		kWh/a	292	318	376	536	407	554
Heating capacity	Nominal (Min - Max)	kW	5,6 (1,5 - 6,5)	7,0 (2,0 - 8,0)	8,0 (2,0 - 9,0)	9,5 (4,1 - 11,5)	8,0 (2,8 - 9,0)	9,5 (4,1 - 11,5)
Heating capacity at -7°C [2]	Nominal	kW	3,62	5,85	6,69	9,63	6,69	9,63
Heating capacity at -15°C [2]	Nominal	kW	3,08	5,74	6,80	9,05	6,80	9,05
SCOP		W/W	3,9 A	3,9 A	3,9 A	3,8 A	3,8 A	3,8 A
Pdesign at -10°C		kW	4,0	6,0	7,1	9,5	7,1	9,5
Power input heating	Nominal (Min - Max)	kW	1,500 (0,220 - 2,450)	1,820 (0,400 - 2,480)	2,130 (0,400 - 2,900)	2,470 (0,900 - 3,350)	2.130 (0.500-2.900)	2,470 (0,900 - 3,350)
Annual energy consumption (ErP) [1]		kWh/a	1.436	2.154	2.548	3.500	2.616	3.500
Indoor unit								
Air volume	Cooling (Hi / Med / Lo)	m³/h	840 / 720 / 630	1.080 / 870 / 690	1.080 / 870 / 690	1.140 / 990 / 780	1.080 / 870 / 690	1.140 / 990 / 780
	Heating (Hi / Med / Lo)	m³/h	840 / 720 / 630	1.080 / 870 / 690	1.080 / 870 / 690	1.140 / 990 / 780	1.080 / 870 / 690	1.140 / 990 / 780
Moisture removal volume		l/h	2,8	3,4	4,2	5.7	4,2	5.7
Sound pressure level [3]	Cooling (Hi / Med / Lo)	dB(A)	40 / 36 / 32	47 / 44 / 40	47 / 44 / 40	49/45/41	47 / 44 / 40	49/45/41
	Heating (Hi / Med / Lo)	dB(A)	40 / 36 / 32	47 / 44 / 40	47 / 44 / 40	49/45/41	47 / 44 / 40	49/45/41
Sound power level	Cooling (Hi)	dB	57	64	64	66	64	66
	Heating (Hi)	dB	57	64	64	66	64	66
Dimensions	H x W x D	mm	300 x 1.065 x 230	300 x 1.065 x 230	300 x 1.065 x 230	300 x 1065 x 230	300 x 1.065 x 230	300 x 1065 x 230
Net weight		kg	13,0	14,5	14,5	14.5	14,5	14.5
Outdoor unit								
Power source		V	220 / 230 / 240	220 / 230 / 240	220 / 230 / 240	220 / 230 / 240	380 / 400 / 415	380 / 400 / 415
Recommended fuse		A	16	20	20	25	16	16
Connection		mm²	2,5	2,5	2,5	4	2,5	2,5
Current	Cooling	A	7,25 / 7,00 / 6,80	7,45 / 7,15 / 6,95	9,75 / 9,40 / 9,10	13,4 / 12,9 / 12,4	3,25 / 3,15 / 3,05	4,60 / 4,40 / 4,30
	Heating	A	6,95 / 6,75 / 6,50	8,45 / 8,15 / 7,90	9,85 / 9,50 / 9,20	11,3 / 10,9 / 10,6	3,30 / 3,20 / 3,10	3,85 / 3,70 / 3,60
Air volume	Cooling / Heating	m³/h	1.800 / 2.100	3.600 / 3.600	3.600 / 3.600	6.600 / 5.700	3.600 / 3.600	6.600 / 5.700
Sound pressure level	Cooling / Heating (Hi)	dB(A)	46 / 50	48 / 50	48 / 50	52 / 52	48 / 50	52 / 52
Sound power level	Cooling / Heating (Hi)	dB	65 / 69	65 / 67	65 / 67	69 / 69	65 / 67	69 / 69
Dimensions	H x W x D	mm	569 x 790 x 285	996 x 940 x 340	996 x 940 x 340	1.416 x 940 x 340	996 x 940 x 340	1.416 x 940 x 340
Net weight		kg	42	68	69	98	71	98
Piping connections	Liquid pipe	Inch (mm)	1/4 (6,35)	3/8 (9,52)	3/8 (9,52)	3/8 (9,52)	3/8 (9,52)	3/8 (9,52)
	Gas pipe	Inch (mm)	1/2 (12,7)	5/8 (15,88)	5/8 (15,88)	5/8 (15,88)	5/8 (15,88)	5/8 (15,88)
Refrigerant loading	R410A	kg	1,65	2	2,35	3,4	2,35	3,4
Elevation difference (in/out) [4]	Max	m	30	30	30	30	30	30
Piping length	Min / Max	m	5 / 40	5 / 50	5 / 50	5 / 75	5 / 50	5 / 75
Precharge length	Max	m	30	30	30	30	30	30
Additional charge		g/m	20	50	50	50	50	50
Operating range	Cooling Min / Max	°C	-15 / +46	-15 / +46	-15 / +46	-15 / +46	-15 / +46	-15 / +46
	Heating Min / Max	°C	-20 / +24	-20 / +24	-20 / +24	-20 / +24	-20 / +24	-20 / +24

Rating Conditions: Cooling Indoor 27°C DB / 19°C WB. Cooling Outdoor 35°C DB / 24°C WB. Heating Indoor 20°C DB. Heating Outdoor 7°C DB / 6°C WB. (DB: Dry Bulb; WB: Wet Bulb). // Specifications subject to change without notice.
1) The annual consumption(ErP) is calculated by formula determined by ErP regulation. 2) Heating capacity is calculated including defrost factor correction. 3) The Sound pressure level of the units shows the value measured of a position 1 meter in front of the main body and 1,5 m from the ground. The sound pressure is measured in accordance with Eurovent 6/C/006-97 specification. 4) When installing the outdoor unit at a higher position than the indoor unit. // Recommended fuse for the indoor 3A. // * Available from June 2014. ** Available from July 2014.
For detailed information about ErP, please visit our page http://www.ptc.panasonic.eu

ELITE

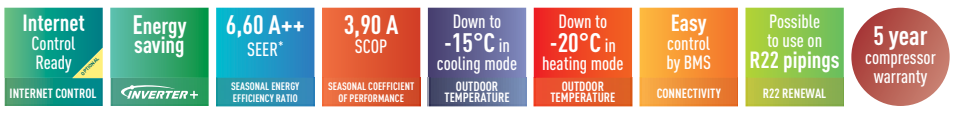

INTERNET CONTROL READY: Optional. ESEER and SCOP: For KIT-60PK1E5A and KIT-71PK1E5A.



U-50PE1E5

U-60PE1E5A U-71PE1E8A
U-71PE1E5A U-100PE1E8A
U-100PE1E5A

4 WAY 60x60 CASSETTE

PACi STANDARD AND ELITE INVERTER+

Small and powerful, ideal for offices and restaurants. Only for Twin, Triple and Double-twin combinations.

Technical Focus

- Fresh air knock out
- Multidirectional air flow
- Integrated drain pump gives 850 mm lift
- 3 speed centrifugal fan
- DC FAN for better efficiency and control
- Easy connection and control of external fan or ERV using the connector PAW-FDC on the indoor unit PCB. The external device can be control by the remote control of the Panasonic indoor unit

STANDARD

			3,6 kW	4,5 kW	5,0 kW
Indoor			**S-36PY2E5A[1)]***	**S-45PY2E5A[1)]***	**S-50PY2E5A***
Panel			**CZ-KPY3A**	**CZ-KPY3A**	**CZ-KPY3A**
Cooling capacity	Nominal	kW	3,6	4,5	5,0
Heating capacity	Nominal	kW	4,2	5,2	5,6
Air volume	Cool/Heat	m^3/h	540 / 540	636 / 636	750 / 750
Moisture removal volume		l/h	2,1	2,5	2,8
Sound pressure level [2)]	Cooling (Hi / Med / Lo)	dB(A)	32 / 29 / 26	36 / 32 / 28	41 / 37 / 33
	Heating (Hi / Med / Lo)	dB(A)	32 / 29 / 26	36 / 32 / 28	41 / 37 / 33
Sound power level	Cooling (Hi)	dB	49 / 46 / 42	53 / 48 / 45	58 / 54 / 50
	Heating (Hi)	dB	49 / 46 / 42	53 / 48 / 45	58 / 54 / 50
Dimensions (H x W x D)	Indoor	mm	283 x 575 x 575	283 x 575 x 575	283 x 575 x 575
	Panel	mm	30 x 625 x 625	30 x 625 x 625	30 x 625 x 625
Net weight	Indoor (Panel)	kg	16 (2,4)	16 (2,4)	16 (2,4)

Rating Conditions: Cooling Indoor 27°C DB / 19°C WB. Cooling Outdoor 35°C DB / 24°C WB. Heating Indoor 20°C DB. Heating Outdoor 7°C DB / 6°C WB. (DB: Dry Bulb; WB: Wet Bulb). // Specifications subject to change without notice.

1) Only for multi combinations.
Recommended fuse for the indoor 3A.
* Available from November 2014.

STANDARD

HIGH HEATING CAPACITY AT -7°C



Panel
CZ-KPY3A





Optional Controller
Wired remote controller
CZ-RTC3



Optional Controller
Timer remote controller
CZ-RTC2



Optional Controller
Wireless remote controller
CZ-RWSK2



Optional Controller
Simplified remote controller
CZ-RE2C2

Compatible with all Panasonic connectivity solutions. For detailed information go to the VRF Control Systems section.

ELITE

			5,0 kW
KIT			**KIT-50PY2E5A***
Indoor			**S-50PY2E5A**
Outdoor			**U-50PE1E5**
Panel			**CZ-KPY3A**
Timer remote controller			**CZ-RTC2**
Cooling capacity	Nominal (Min - Max)	kW	5,0 (1,5 - 5,6)
ESEER		**W/W**	**5,90** A+
Pdesign		kW	5,0
Power input cooling	Nominal (Min - Max)	kW	1,64 (0,260 - 2,45)
Annual energy consumption (ErP) [1]		kWh/a	297
Heating capacity	Nominal (Min - Max)	kW	5,6 (1,5 - 6,3)
Heating capacity at -7°C [2]	Nominal	kW	3,62
Heating capacity at -15°C [2]	Nominal	kW	3,08
SCOP		**W/W**	**3,80** A
Pdesign at -10°C		kW	4,0
Power input heating	Nominal (Min - Max)	kW	1,79 (0,22 - 2,57)
Annual energy consumption (ErP) [1]		kWh/a	1.474
Indoor unit			
Air volume	Cooling / Heating	m³/h	750 / 750
Moisture removal volume		l/h	2,8
Sound pressure level [3]	Cooling (Hi / Me / Lo)	dB(A)	41 / 37 / 33
	Heating (Hi / Me / Lo)	dB(A)	41 / 37 / 33
Sound power level	Cooling (Hi)	dB	58 / 54 / 50
	Heating (Hi)	dB	58 / 54 / 50
Dimensions (H x W x D)	Indoor	mm	283 x 575 x 575
	Panel	mm	30 x 625 x 625
Net weight		kg	16
Outdoor unit			
Power source		V	220 - 240
Recommended fuse		A	16
Connection		mm²	2,5
Current	Cooling	A	7,5
	Heating	A	8,2
Air volume	Cooling / Heating	m³/h	1.800 / 2.100
Sound pressure level	Cooling / Heating (Hi)	dB(A)	46 / 50
Sound power level	Cooling / Heating (Hi)	dB	65 / 69
Dimensions	H x W x D	mm	569 x 790 x 285
Net weight		kg	42
Piping connections	Liquid pipe	Inch (mm)	1/4 (6,35)
	Gas pipe	Inch (mm)	1/2 (12,7)
Refrigerant Loading	R410A	kg	1,65
Elevation difference (in/out) [4]	Max	m	30
Piping length	Min / Max	m	5 ~ 40
Precharge length	Max	m	30
Additional gas		g/m	20
Operating range	Cooling Min / Max	°C	-15 / +46
	Heating Min / Max	°C	-20 / +24

Rating Conditions: Cooling Indoor 27°C DB / 19°C WB. Cooling Outdoor 35°C DB / 24°C WB. Heating Indoor 20°C DB. Heating Outdoor 7°C DB / 6°C WB. (DB: Dry Bulb; WB: Wet Bulb). // Specifications subject to change without notice.
1) The annual consumption(ErP) is calculated by formula determined by ErP regulation. 2) Heating capacity is calculated including defrost factor correction. 3) The Sound pressure level of the units shows the value measured of a position 1 meter in front of the main body and 1,5 m from the ground. The sound pressure is measured in accordance with Eurovent 6/C/006-97 specification. 3) When installing the outdoor unit at a higher position than the indoor unit. Recommended fuse for the indoor 3A. * Available from November 2014.
For detailed information about ErP, please visit our page http://www.ptc.panasonic.eu

ELITE



U-50PE1E5

INTERNET CONTROL READY: Optional.

4 WAY 90x90 CASSETTE

PACi STANDARD AND ELITE INVERTER+

The 4 Way 90x90 Cassette incorporates many new benefits thanks to advances in design and technology.

Technical Focus

- New Circle Flow Flap for more even temp. distribution
- Higher efficiency split fin
- New DC fan motor
- Highly efficient and silent turbo fan
- Individual flap control for flexible air flow direction
- Easy to clean suction grill & flap
- Special adjustment for high ceiling application
- DC FAN for better efficiency and control
- Easy connection and control of external fan or ERV using the connector PAW-FDC on the indoor unit PCB. The external device can be control by the remote control of the Panasonic indoor unit

STANDARD

			Single Phase				Three Phase		
			6,0 kW	7,1 kW	10,0 kW	12,5 kW	10,0 kW	12,5 kW	14,0 kW
KIT			**KIT-60PUY1E5A***	**KIT-71PUY1E5A***	**KIT-100PUY1E5A***	**KIT-125PUY1E5A***	**KIT-100PUY1E8A***	**KIT-125PUY1E8A***	**KIT-140PUY1E8A***
Indoor			**S-60PU1E5A**	**S-71PU1E5A**	**S-100PU1E5A**	**S-125PU1E5A**	**S-100PU1E5A**	**S-125PU1E5A**	**S-140PU1E5A**
Outdoor			**U-60PEY1E5**	**U-71PEY1E5**	**U-100PEY1E5**	**U-125PEY1E5**	**U-100PEY1E8**	**U-125PEY1E8**	**U-140PEY1E8**
Panel			**CZ-KPU21**	**CZ-KPU21**	**CZ-KPU21**	**CZ-KPU21**	**CZ-KPU21**	**CZ-KPU21**	**CZ-KPU21**
Timer remote controller			**CZ-RTC2**	**CZ-RTC2**	**CZ-RTC2**	**CZ-RTC2**	**CZ-RTC2**	**CZ-RTC2**	**CZ-RTC2**
Cooling capacity	Nominal (Min - Max)	kW	6,0 (2,0 - 7,0)	7,1 (2,0 - 7,7)	10,0	12,5 (3,8 - 13,5)	10,0 (2,7 - 11,5)	12,5 (3,8 - 13,5)	14,0 (3,3 - 15,5)
ESEER	Nominal (Min - Max)	W/W	**6,8** A++	**6,3** A++	**6,4** A++	**3,66** [1]	**6,2** A++	**3,66** [1]	**3,80** [1]
Pdesign		kW	6,0	7,1	10	–	10,0	–	–
Power input cooling	Nominal (Min - Max)	kW	1,690 (0,325 - 2,500)	2,190 (0,325 - 2,800)	3,220 (0,530 - 4,200)	4,020 (0,900 - 5,000)	3,220 (0,530 - 4,200)	4,020 (0,900 - 5,000)	4,36 (0,84 - 6,00)
Annual energy consumption (ErP) [2]		kWh/a	309	394	547	–	564	–	–
Heating capacity	Nominal (Min - Max)	kW	6,0 (1,8 - 7,0)	7,1 (1,8 - 8,1)	10,0	12,5 (3,4 - 15,0)	10,0 (2,1 - 13,8)	12,5 (3,4 - 15,0)	14,0 (4,1 - 16,0)
Heating capacity at -7°C [3]	Nominal	kW	4,39	4,32	7,22	9,14	7,22	9,14	11,68
Heating capacity at -15°C [3]	Nominal	kW	–	–	–	–	–	–	–
SCOP	Nominal (Min - Max)	W/W	**4,0** A+	**4,0** A+	**4,0** A+	**3,40** [4]	**4,0** A+	**3,40** [4]	**3,52** [4]
Pdesign at -10°C		kW	6,0	6,0	10,0	–	10,0	–	–
Power input heating	Nominal (Min - Max)	kW	1,480 (0,275 - 2,155)	1,880 (0,275 - 2,510)	2,630 (0,410 - 4,000)	3,290 (0,730 - 4,400)	2,630 (0,410 - 4,000)	3,290 (0,730 - 4,400)	3,60 (0,90 - 5,20)
Annual energy consumption (ErP) [2]		kWh/a	2.100	2.100	3.500	–	3.500	–	–
Indoor unit									
Air volume	Cooling (Hi / Med / Lo)	m³/h	1.260 / 1.020 / 840	1.320 / 1.020 / 840	1.980 / 1.620 / 1.260	2.100 / 1.680 / 1.320	1.980 / 1.620 / 1.260	2.100 / 1.680 / 1.320	2.160 / 1.740 / 1.380
	Heating (Hi / Med / Lo)	m³/h	1.260 / 1.020 / 840	1.320 / 1.020 / 840	1.980 / 1.620 / 1.260	2.100 / 1.680 / 1.320	1.980 / 1.620 / 1.260	2.100 / 1.680 / 1.320	2.160 / 1.740 / 1.380
Moisture removal volume		l/h	3,4	4,2	6,0	7,9	6,0	7,9	9,0
Sound pressure level [5]	Cooling (Hi / Med / Lo)	dB(A)	36 / 31 / 28	37 / 31 / 28	44 / 38 / 32	45 / 39 / 33	44 / 38 / 32	45 / 39 / 33	46 / 40 / 34
	Heating (Hi / Med / Lo)	dB(A)	36 / 31 / 28	37 / 31 / 28	44 / 38 / 32	45 / 39 / 33	44 / 38 / 32	45 / 39 / 33	46 / 40 / 34
Sound power level	Cooling (Hi / Med / Lo)	dB	53 / 48 / 45	54 / 48 / 45	62 / 55 / 49	63 / 56 / 50	62 / 55 / 49	63 / 56 / 50	64 / 57 / 51
	Heating (Hi / Med / Lo)	dB	53 / 48 / 45	54 / 48 / 45	62 / 55 / 49	63 / 56 / 50	62 / 55 / 49	63 / 56 / 50	64 / 57 / 51
Dimensions (H x W x D)	Indoor	mm	256 x 840 x 840	256 x 840 x 840	319 x 840 x 840	319 x 840 x 840	319 x 840 x 840	319 x 840 x 840	319 x 840 x 840
	Panel	mm	33,5 x 950 x 950	33,5 x 950 x 950	33,5 x 950 x 950	33,5 x 950 x 950	33,5 x 950 x 950	33,5 x 950 x 950	33,5 x 950 x 950
Net weight	Indoor (Panel)	kg	24 (4)	24 (4)	27 (4)	27 (4)	27 (4)	27 (4)	27 (4)
Outdoor unit									
Power source		V	220 / 230 / 240	220 / 230 / 240	220 / 230 / 240	220 / 230 / 240	380 / 400 / 415	380 / 400 / 415	380 / 400 / 415
Recommended fuse		A	20	20	25	30	16	16	16
Connection		mm²	2,5	2,5	4	6	2,5	2,5	2,5
Current	Cooling	A	8,30 / 7,90 / 7,60	10,70 / 10,30 / 9,80	15,10 / 14,40 / 13,80	19,2 / 18,4 / 17,6	5,10 / 4,85 / 4,70	6,35 / 6,05 / 5,80	6,85 / 6,50 / 6,25
	Heating	A	7,20 / 6,90 / 6,60	9,10 / 8,70 / 8,30	12,00 / 11,60 / 11,20	15,4 / 14,8 / 14,2	4,15 / 3,95 / 3,80	5,15 / 4,90 / 4,70	5,65 / 5,35 / 5,20
Air volume	Cooling / Heating	m³/h	1.800 / 2.100	2340	4.560 / 4.020	4.800 / 4.380	4.560 / 4.020	4.800 / 4.380	8.100 / 7.200
Sound pressure level	Cooling / Heating (Hi)	dB(A)	46 / 50	50 / 52	54 / 54	56 / 56	54 / 54	56 / 56	54 / 53
Sound power level	Cooling / Heating (Hi)	dB	65 / 69	70 / 70	70 / 70	73 / 73	70 / 70	73 / 73	71 / 70
Dimensions	H x W x D	mm	569 x 790 x 285	569 x 790 x 285	996 x 940 x 340	996 x 940 x 340	996 x 940 x 340	996 x 940 x 340	1.416 x 940 x 340
Net weight		kg	42	42	73	85	73	85	98
Piping connections	Liquid pipe / Gas pipe	Inch (mm)	3/8 (9,52) / 5/8 (15,88)	3/8 (9,52) / 5/8 (15,88)	3/8 (9,52) / 5/8 (15,88)	3/8 (9,52) / 5/8 (15,88)	3/8 (9,52) / 5/8 (15,88)	3/8 (9,52) / 5/8 (15,88)	3/8 (9,52) / 5/8 (15,88)
Refrigerant loading	R410A	kg	1,7	1,7	2,60	3,20	2,60	3,20	3,4
Elevation difference (in/out) [6]	Max	m	30	30	30	30	30	30	30
Piping length	Min / Max	m	5 / 50	5 / 50	5 / 50	5 / 50	5 / 50	5 / 50	5 / 50
Precharge length	Max	m	20	20	30	30	30	30	30
Additional charge		g/m	40	40	50	50	50	50	50
Operating range	Cooling Min / Max	°C	-10 / +43	-10 / +43	-10 / +43	-10 / +43	-10 / +43	-10 / +43	-10 / +43
	Heating Min / Max	°C	-15 / +24	-15 / +24	-15 / +24	-15 / +24	-15 / +24	-15 / +24	-15 / +24

Rating Conditions: Cooling Indoor 27°C DB / 19°C WB. Cooling Outdoor 35°C DB / 24°C WB. Heating Indoor 20°C DB. Heating Outdoor 7°C DB / 6°C WB. (DB: Dry Bulb; WB: Wet Bulb). // Specifications subject to change without notice.
1) ESEER is calculated in base Eurovent IPLV for SBEM for U1 indoor unit SEER=a[EER25)+b[EER50)+c[EER75)+d[EER100) where EER25, EER50, EER75 and EER100 are the EER measured value at 25%, 50%, 75% and 100% part load for temperatures 20, 25, 30 and 35°C DB, respectively. a, b, c and d are values assigned for an office type. These values are given as a=0,2, b=0,36, c=0,32 and d=0,03. The internal temperatures are taken at 27°C DB and 19°C WB. 2) The annual consumption(ErP) is calculated by formula determined by ErP regulation. 3) Heating capacity is calculated including defrost factor correction. 4) SCOP is calculated in base Eurovent IPLV for SBEM with U1 indoor unit including defrost correction factor. 5) The Sound pressure level of the units shows the value measured of a position

STANDARD



INTERNET CONTROL READY: Optional. ESEER and SCOP: For KIT-60PUY1E5A.

HIGH HEATING CAPACITY AT -7°C



Panel
CZ-KPU21





Optional Controller
Wired remote controller
CZ-RTC3



Optional Controller
Timer remote controller
CZ-RTC2



Optional Controller
Wireless remote controller
CZ-RWSU2



Optional Controller
Simplified remote controller
CZ-RE2C2

Compatible with all Panasonic connectivity solutions. For detailed information go to the VRF Control Systems section.

ELITE

Single Phase						Three Phase			
5,0 kW	6,0 kW	7,1 kW	10,0 kW	12,5 kW	14,0 kW	7,1 kW	10,0 kW	12,5 kW	14,0 kW
KIT-50PU1E5A*	KIT-60PU1E5A*	KIT-71PU1E5A*	KIT-100PU1E5A*	KIT-125PU1E5A*	KIT-140PU1E5A*	KIT-71PU1E8A*	KIT-100PU1E8A*	KIT-125PU1E8A*	KIT-140PU1E8A*
S-50PU1E5A	S-60PU1E5A	S-71PU1E5A	S-100PU1E5A	S-125PU1E5A	S-140PU1E5A	S-71PU1E5A	S-100PU1E5A	S-125PU1E5A	S-140PU1E5A
U-50PE1E5	U-60PE1E5A	U-71PE1E5A	U-100PE1E5A	U-125PE1E5A	U-140PE1E5A	U-71PE1E8A	U-100PE1E8A	U-125PE1E8A	U-140PE1E8A
CZ-KPU21	CZ-KPU21	CZ-KPU21	CZ-KPU21	CZ-KPU21	CZ-KPU21	CZ-KPU21	CZ-KPU21	CZ-KPU21	CZ-KPU21
CZ-RTC2	CZ-RTC2	CZ-RTC2	CZ-RTC2	CZ-RTC2	CZ-RTC2	CZ-RTC2	CZ-RTC2	CZ-RTC2	CZ-RTC2
5,0 (1,5 - 5,6)	6,0 (2,5 - 7,1)	7,1 (2,5 - 8,0)	10,0 (3,3 - 12,5)	12,5 (3,3 - 14,0)	14,0 (3,3 - 15,5)	7,1 (3,2 - 8,0)	10,0 (3,3 - 12,5)	12,5 (3,3 - 14,0)	14,0 (3,3 - 15,5)
6,5 A++	7,4 A++	7,4 A++	6,6 A++	4,26 [1]	3,84 [1]	6,8 A++	6,5 A++	4,26 [1]	3,84 [1]
5,0	6,0	7,1	10,0	—	—	7,1	10,0	—	—
1,350 (0,260 - 2,000)	1,480 (0,450 - 2,000)	1,800 (0,450 - 2,650)	2,380 (0,840 - 3,700)	3,470 (0,840 - 4,600)	4,310 (0,840 - 6,000)	1,800 (0,560 - 2,650)	2,380 (0,840 - 3,700)	3,470 (0,840 - 4,600)	4,310 (0,840 - 6,000)
269	284	336	530	—	—	365	538	—	—
5,6 (1,5 - 6,5)	7,0 (2,0 - 8,0)	8,0 (2,0 - 9,0)	11,2 (4,1 - 14,0)	14,0 (4,1 - 16,0)	16,0 (4,1 - 18,0)	8,0 (2,8 - 9,0)	11,2 (4,1 - 14,0)	14,0 (4,1 - 16,0)	16,0 (4,1 - 18,0)
3,62	5,85	6,69	9,63	11,80	13,98	6,69	9,63	11,80	13,98
3,08	5,74	6,80	9,05	10,84	11,42	6,80	9,05	10,84	11,42
3,8 A	4,1 A+	4,1 A+	4,2 A+	3,63 [4]	3,41 [4]	4,0 A+	4,2 A+	3,63 [4]	3,41 [4]
4,0	6,0	7,1	10,0	—	—	7,1	10,0	—	—
1,430 (0,220 - 2,300)	1,810 (0,400 - 2,480)	2,000 (0,400 - 2,900)	2,600 (0,900 - 4,400)	3,500 (0,900 - 5,200)	4,330 (0,900 - 5,900)	2,000 (0,500 - 2,900)	2,600 (0,900 - 4,400)	3,500 (0,900 - 5,200)	4,330 (0,900 - 5,900)
1.474	2.047	2.424	3.333	—	—	2.485	3.333	—	—
960 / 810 / 720	1.260 / 1.020 / 840	1.320 / 1.020 / 840	1.980 / 1.620 / 1.260	2.100 / 1.680 / 1.320	2.160 / 1.740 / 1.380	1.320 / 1.020 / 840	1.980 / 1.620 / 1.260	2.100 / 1.680 / 1.320	2.160 / 1.740 / 1.380
960 / 810 / 720	1.260 / 1.020 / 840	1.320 / 1.020 / 840	1.980 / 1.620 / 1.260	2.100 / 1.680 / 1.320	2.160 / 1.740 / 1.380	1.320 / 1.020 / 840	1.980 / 1.620 / 1.260	2.100 / 1.680 / 1.320	2.160 / 1.740 / 1.380
2,8	3,4	4,2	6,0	7,9	9,0	4,2	6,0	7,9	9,0
32 / 29 / 27	36 / 31 / 28	37 / 31 / 28	44 / 38 / 32	45 / 39 / 33	46 / 40 / 34	37 / 31 / 28	44 / 38 / 32	45 / 39 / 33	46 / 40 / 34
32 / 29 / 27	36 / 31 / 28	37 / 31 / 28	44 / 38 / 32	45 / 39 / 33	46 / 40 / 34	37 / 31 / 28	44 / 38 / 32	45 / 39 / 33	46 / 40 / 34
49 / 46 / 44	53 / 48 / 45	54 / 48 / 45	62 / 55 / 49	63 / 56 / 50	64 / 57 / 51	54 / 48 / 45	62 / 55 / 49	63 / 56 / 50	64 / 57 / 51
49 / 46 / 44	53 / 48 / 45	54 / 48 / 45	62 / 55 / 49	63 / 56 / 50	64 / 57 / 51	54 / 48 / 45	62 / 55 / 49	63 / 56 / 50	64 / 57 / 51
256 x 840 x 840	256 x 840 x 840	256 x 840 x 840	319 x 840 x 840	319 x 840 x 840	319 x 840 x 840	256 x 840 x 840	319 x 840 x 840	319 x 840 x 840	319 x 840 x 840
33,5 x 950 x 950	33,5 x 950 x 950	33,5 x 950 x 950	33,5 x 950 x 950	33,5 x 950 x 950	33,5 x 950 x 950	33,5 x 950 x 950	33,5 x 950 x 950	33,5 x 950 x 950	33,5 x 950 x 950
23 (4)	24 (4)	24 (4)	27 (4)	27 (4)	27 (4)	24 (4)	27 (4)	27 (4)	27 (4)
220 / 230 / 240	220 / 230 / 240	220 / 230 / 240	220 / 230 / 240	220 / 230 / 240	220 / 230 / 240	380 / 400 / 415	380 / 400 / 415	380 / 400 / 415	380 / 400 / 415
16	20	20	25	30	16	16	16	16	16
2,5	2,5	2,5	4	6	2,5	2,5	2,5	2,5	2,5
6,50 / 6,20 / 5,95	7,15 / 6,90 / 6,70	8,40 / 8,10 / 7,90	10,7 / 10,3 / 9,90	15,8 / 15,3 / 14,8	19,6 / 19,0 / 18,4	2,80 / 2,70 / 2,60	3,70 / 3,50 / 3,40	5,45 / 5,15 / 5,00	6,75 / 6,45 / 6,20
6,90 / 6,60 / 6,30	8,50 / 8,20 / 7,95	9,30 / 9,00 / 8,70	11,8 / 11,4 / 11,0	15,9 / 15,4 / 14,9	19,8 / 19,2 / 18,6	3,10 / 3,00 / 2,90	4,05 / 3,85 / 3,75	5,50 / 5,20 / 5,05	6,85 / 6,50 / 6,25
1.800 / 2.100	3.600 / 3.600	3.600 / 3.600	6.600 / 5.700	7.800 / 6.600	8.100 / 7.200	3.600 / 3.600	6.600 / 5.700	7.800 / 6.600	8.100 / 7.200
46 / 50	48 / 50	48 / 50	52 / 52	53 / 53	54 / 55	48 / 50	52 / 52	53 / 53	54 / 55
65 / 69	65 / 67	65 / 67	69 / 69	70 / 70	71 / 71	65 / 67	69 / 69	70 / 70	71 / 71
569 x 790 x 285	996 x 940 x 340	996 x 940 x 340	1.416 x 940 x 340	1.416 x 940 x 340	1.416 x 940 x 340	996 x 940 x 340	1.416 x 940 x 340	1.416 x 940 x 340	1.416 x 940 x 340
42	68	69	98	98	98	71	98	98	98
1/4 (6,35) / 1/2 (12,7)	3/8 (9,52) / 5/8 (15,88)	3/8 (9,52) / 5/8 (15,88)	3/8 (9,52) / 5/8 (15,88)	3/8 (9,52) / 5/8 (15,88)	3/8 (9,52) / 5/8 (15,88)	3/8 (9,52) / 5/8 (15,88)	3/8 (9,52) / 5/8 (15,88)	3/8 (9,52) / 5/8 (15,88)	3/8 (9,52) / 5/8 (15,88)
1,65	2	2,35	3,4	3,4	3,4	2,35	3,4	3,4	3,4
30	30	30	30	30	30	30	30	30	30
5 / 40	5 / 50	5 / 50	5 / 75	5 / 75	5 / 75	5 / 50	5 / 75	5 / 75	5 / 75
30	30	30	30	30	30	30	30	30	30
20	50	50	50	50	50	50	50	50	50
-15 / +46	-15 / +46	-15 / +46	-15 / +46	-15 / +46	-15 / +46	-15 / +46	-15 / +46	-15 / +46	-15 / +46
-20 / +24	-20 / +24	-20 / +24	-20 / +24	-20 / +24	-20 / +24	-20 / +24	-20 / +24	-20 / +24	-20 / +24

1 meter in front of the main body and 1,5 m from the ground. The sound pressure is measured in accordance with Eurovent 6/C/006-97 specification. 6) When installing the outdoor unit at a higher position than the indoor unit. // Recommended fuse for the indoor 3A. // * Available from May 2014.
For detailed information about ErP, please visit our page http://www.ptc.panasonic.eu

ELITE

Internet Control Ready — INTERNET CONTROL
Energy saving — INVERTER+
7,40 A+++ SEER — SEASONAL ENERGY EFFICIENCY RATIO
4,10 A+ SCOP — SEASONAL COEFFICIENT OF PERFORMANCE
Down to -15°C in cooling mode — OUTDOOR TEMPERATURE
Down to -20°C in heating mode — OUTDOOR TEMPERATURE
Easy control by BMS — CONNECTIVITY
Possible to use on R22 pipings — R22 RENEWAL
5 year compressor warranty

INTERNET CONTROL READY: Optional. ESEER and SCOP: For KIT-60PU1E5A and KIT-71PU1E5A.



U-50PE1E5



U-60PE1E5A
U-71PE1E5A
U-71PE1E8A



U-100PE1E5A U-100PE1E8A
U-125PE1E5A U-125PE1E8A
U-140PE1E5A U-140PE1E8A

LOW STATIC PRESSURE HIDE AWAY

PACi STANDARD AND ELITE INVERTER+

The depth of only 250mm provides greater installation flexibility and the unit can be used in more applications. Ideal for sites with narrow ceiling voids.

Technical Focus

- Compact indoor units without loosing static pressure (Only 250 mm high)
- 50 Pa static pressure
- Easy maintenance and service via external electrical box
- 3 speed centrifugal fan through wired or wireless remote control
- DC FAN for better efficiency and control
- Easy connection and control of external fan or ERV using the connector PAW-FDC on the indoor unit PCB. The external device can be control by the remote control of the Panasonic indoor unit

STANDARD

			Single Phase				Three Phase		
			6,0 kW	7,1 kW	10,0 kW	12,5 kW	10,0 kW	12,5 kW	14,0 kW
KIT			**KIT-60PNY1E5A***	**KIT-71PNY1E5A***	**KIT-100PNY1E5A***	**KIT-125PNY1E5A***	**KIT-100PNY1E8A***	**KIT-125PNY1E8A***	**KIT-140PNY1E8A***
Indoor			**S-60PN1E5A**	**S-71PN1E5A**	**S-100PN1E5A**	**S-125PN1E5A**	**S-100PN1E5A**	**S-125PN1E5A**	**S-140PN1E5A**
Outdoor			**U-60PEY1E5**	**U-71PEY1E5**	**U-100PEY1E5**	**U-125PEY1E5**	**U-100PEY1E8**	**U-125PEY1E8**	**U-140PEY1E8**
Timer remote controller			**CZ-RTC2**	**CZ-RTC2**	**CZ-RTC2**	**CZ-RTC2**	**CZ-RTC2**	**CZ-RTC2**	**CZ-RTC2**
Cooling capacity	Nominal (Min - Max)	kW	6,0 (2,0 - 7,0)	7,1 (2,0 - 7,7)	10,0 (2,7 - 11,5)	12,5 (3,8 - 13,5)	10,0 (2,7 - 11,5)	12,5 (3,8 - 13,5)	14,0 (3,3 - 15,5)
ESEER	Nominal (Min - Max)	W/W	**4,7** B	**5,0** B	**5,3** A	**3,66** [1]	**5,2** A	**3,66** [1]	**3,80** [1]
Pdesign		kW	6,0	7,1	10,0	—	10,0	—	—
Power input cooling	Nominal (Min - Max)	kW	1,990 (0,325 - 2,940)	2,570 (0,325 - 3,230)	3,555 (0,570 - 4,300)	4,445 (0,950 - 5,200)	3,555 (0,570 - 4,300)	4,445 (0,950 - 5,200)	4,700 (0,840 - 6,000)
Annual energy consumption (ErP) [2]		kWh/a	444	496	660	—	673	—	—
Heating capacity	Nominal (Min - Max)	kW	6,0 (1,8 - 7,0)	7,1 (1,8 - 8,1)	10,0 (2,1 - 13,8)	12,5 (3,4 - 15,0)	10,0 (2,1 - 13,8)	12,5 (3,4 - 15,0)	14,0 (4,1 - 16,0)
Heating capacity at -7°C [3]	Nominal	kW	4,39	4,32	7,22	9,14	7,22	9,14	11,68
Heating capacity at -15°C [3]	Nominal	kW	—	—	—	—	—	—	—
SCOP	Nominal (Min - Max)	W/W	**3,8** A	**3,8** A	**3,8** A	**3,40** [4]	**3,8** A	**3,40** [4]	**3,52** [4]
Pdesign at -10°C		kW	4,8	5,3	7,6	—	7,6	—	—
Power input heating	Nominal (Min - Max)	kW	1,660 (0,275 - 2,420)	2,080 (0,275 - 2,780)	2,935 (0,450 - 4,100)	3,665 (0,780 - 4,600)	2,935 (0,450 - 4,100)	3,665 (0,780 - 4,600)	3,880 (1,050 - 5,400)
Annual energy consumption (ErP) [2]		kWh/a	1.757	1.952	2.800	—	2.800	—	—
Indoor unit									
External static pressure [5]	Nominal (Min - Max)	Pa	50 (10 - 80)	50 (10 - 80)	50 (10 - 80)	50 (10 - 80)	50 (10 - 80)	50 (10 - 80)	50 (10 - 80)
Air volume	Cooling / Heating	m³/h	1.320 / 1.320	1.320 / 1.320	2.160 / 2.160	2.280 / 2.280	2.160 / 2.160	2.280 / 2.280	2.400 / 2.400
Moisture removal volume		l/h	3,4	4,2	6,0	7,9	6,0	7,9	9,0
Sound pressure level [6]	Cooling (Hi / Med / Lo)	dB(A)	43 / 41 / 36	43 / 41 / 36	44 / 42 / 37	45 / 43 / 38	44 / 42 / 37	45 / 43 / 38	46 / 44 / 39
	Heating (Hi / Med / Lo)	dB(A)	43 / 41 / 36	43 / 41 / 36	44 / 42 / 37	45 / 43 / 38	44 / 42 / 37	45 / 43 / 38	46 / 44 / 39
Sound power level	Cooling (Hi / Med / Lo)	dB	60 / 58 / 53	60 / 58 / 53	65 / 63 / 58	66 / 64 / 59	65 / 63 / 58	66 / 64 / 59	67 / 65 / 60
	Heating (Hi / Med / Lo)	dB	60 / 58 / 53	60 / 58 / 53	65 / 63 / 58	66 / 64 / 59	65 / 63 / 58	66 / 64 / 59	67 / 65 / 60
Dimensions [7]	H x W x D	mm	250 x 1.000(+100) x 650	250 x 1.000(+100) x 650	250 x 1.200(+100) x 650	250 x 1.200(+100) x 650	250 x 1.200(+100) x 650	250 x 1.200(+100) x 650	250 x 1.200(+100) x 650
Net weight		kg	32	32	41	41	41	41	41
Outdoor unit									
Power source		V	220 / 230 / 240	220 / 230 / 240	220 / 230 / 240	220 / 230 / 240	380 / 400 / 415	380 / 400 / 415	380 / 400 / 415
Recommended fuse		A	20	20	25	30	16	16	16
Connection		mm²	2,5	2,5	4	6	2,5	2,5	2,5
Current	Cooling	A	9,1 / 8,7 / 8,4	12,0 / 11,5 / 11,0	16,0 / 15,3 / 14,8	20,1 / 19,3 / 18,7	5,45 / 5,20 / 5,05	6,85 / 6,50 / 6,25	7,05 / 6,70 / 6,45
	Heating	A	7,5 / 7,2 / 6,9	9,6 / 9,2 / 8,9	13,0 / 12,5 / 12,1	16,5 / 15,8 / 15,2	4,45 / 4,25 / 4,10	5,55 / 5,30 / 5,10	5,90 / 5,60 / 5,40
Air volume	Cooling / Heating	m³/h	1.800 / 2.100	2.340	4.560 / 4.020	4.800 / 4.380	4.560 / 4.020	4.800 / 4.380	8.100 / 7.200
Sound pressure level	Cooling / Heating (Hi)	dB(A)	46 / 50	50 / 52	54 / 54	56 / 56	54 / 54	56 / 56	54 / 53
Sound power level	Cooling / Heating (Hi)	dB	65 / 69	70 / 70	70 / 70	73 / 73	70 / 70	73 / 73	71 / 70
Dimensions	H x W x D	mm	569 x 790 x 285	569 x 790 x 285	996 x 940 x 340	996 x 940 x 340	996 x 940 x 340	996 x 940 x 340	1.416 x 940 x 340
Net weight		kg	42	42	73	85	73	85	98
Piping connections	Liquid pipe	Inch (mm)	3/8 (9,52)	3/8 (9,52)	3/8 (9,52)	3/8 (9,52)	3/8 (9,52)	3/8 (9,52)	3/8 (9,52)
	Gas pipe	Inch (mm)	5/8 (15,88)	5/8 (15,88)	5/8 (15,88)	5/8 (15,88)	5/8 (15,88)	5/8 (15,88)	5/8 (15,88)
Refrigerant loading	R410A	kg	1,7	1,7	2,60	3,20	2,60	3,20	3,4
Elevation difference (in/out) [8]	Max	m	30	30	30	30	30	30	30
Piping length	Min / Max	m	5 / 50	5 / 50	5 / 50	5 / 50	5 / 50	5 / 50	5 / 50
Precharge length	Max	m	20	20	30	30	30	30	30
Additional charge		g/m	40	40	50	50	50	50	50
Operating range	Cooling Min / Max	°C	-10 / +43	-10 / +43	-10 / +43	-10 / +43	-10 / +43	-10 / +43	-10 / +43
	Heating Min / Max	°C	-15 / +24	-15 / +24	-15 / +24	-15 / +24	-15 / +24	-15 / +24	-15 / +24

Rating Conditions: Cooling Indoor 27°C DB / 19°C WB. Cooling Outdoor 35°C DB / 24°C WB. Heating Indoor 20°C DB. Heating Outdoor 7°C DB / 6°C WB. (DB: Dry Bulb; WB: Wet Bulb). // Specifications subject to change without notice.
1) ESEER is calculated in base Eurovent IPLV for SBEM for U1 indoor unit SEER=a(EER25)+b(EER50)+c(EER75)+d(EER100) where EER25, EER50, EER75 and EER100 are the EER measured value at 25%, 50%, 75% and 100% part load for temperatures 20, 25, 30 and 35°C DB, respectively. a, b, c and d are values assigned for an office type. These values are given as a=0,2, b=0,36, c=0,32 and d=0,03. The internal temperatures are taken at 27°C DB and 19°C WB. 2) The annual consumption(ErP) is calculated by formula determined by ErP regulation. 3) Heating capacity is calculated including defrost factor correction. 4) SCOP is calculated in base Eurovent IPLV for SBEM with U1 indoor unit including defrost correction factor. 5) Medium External static pressure setting from factory. 6) The Sound pressure

STANDARD



U-60PEY1E5
U-71PEY1E5

U-100PEY1E5 U-100PEY1E8
U-125PEY1E5 U-125PEY1E8

U-140PEY1E8

INTERNET CONTROL READY: Optional. ESEER and SCOP: For KIT-100PNY1E5A.

HIGH HEATING CAPACITY AT -7°C





Optional Controller
Wired remote controller
CZ-RTC3



Optional Controller
Timer remote controller
CZ-RTC2



Optional Controller
Wireless remote controller
CZ-RWSK2 + CZ-RWSC3



Optional Controller
Simplified remote controller
CZ-RE2C2

Compatible with all Panasonic connectivity solutions. For detailed information go to the VRF Control Systems section.

ELITE

	Single Phase						Three Phase			
	5,0 kW	6,0 kW	7,1 kW	10,0 kW	12,5 kW	14,0 kW	7,1 kW	10,0 kW	12,5 kW	14,0 kW
	KIT-50PN1E5A*	KIT-60PN1E5A*	KIT-71PN1E5A*	KIT-100PN1E5A*	KIT-125PN1E5A*	KIT-140PN1E5A*	KIT-71PN1E8A*	KIT-100PN1E8A*	KIT-125PN1E8A*	KIT-140PN1E8A*
	S-50PN1E5A	S-60PN1E5A	S-71PN1E5A	S-100PN1E5A	S-125PN1E5A	S-140PN1E5A	S-71PN1E5A	S-100PN1E5A	S-125PN1E5A	S-140PN1E5A
	U-50PE1E5	U-60PE1E5A	U-71PE1E5A	U-100PE1E5A	U-125PE1E5A	U-140PE1E5A	U-71PE1E8A	U-100PE1E8A	U-125PE1E8A	U-140PE1E8A
	CZ-RTC2	CZ-RTC2	CZ-RTC2	CZ-RTC2	CZ-RTC2	CZ-RTC2	CZ-RTC2	CZ-RTC2	CZ-RTC2	CZ-RTC2
	5,0 (1,5 - 5,6)	6,0 (2,5 - 7,1)	7,1 (2,5 - 8,0)	10,0 (3,3 - 12,5)	12,5 (3,3 - 14,0)	14,0 (3,3 - 15,5)	7,1 (2,5 - 8,0)	10,0 (3,3 - 12,5)	12,5 (3,3 - 14,0)	14,0 (3,3 - 15,5)
	4,6 B	5,5 A	5,5 A	6,0 A+	4,26 [1]	3,84 [1]	5,2 A	5,8 A+	4,26 [1]	3,84 [1]
	5,0	6,0	7,1	10,0	—	—	7,1	10,0	—	—
	1,560 (0,260 - 2,310)	1,850 (0,550 - 2,105)	2,150 (0,550 - 2,750)	2,670 (0,870 - 3,800)	3,890 (1,000 - 4,800)	4,650 (1,000 - 6,200)	2,150 (0,660 - 2,750)	2,670 (0,870 - 3,800)	3,890 (1,000 - 4,800)	4,650 (1,000 - 6,200)
	380	382	452	583	—	—	477	603	—	—
	5,6 (1,5 - 6,3)	7,0 (2,0 - 8,0)	8,0 (2,0 - 9,0)	11,2 (4,1 - 14,0)	14,0 (4,1 - 16,0)	16,0 (4,1 - 18,0)	8,0 (2,0 - 9,0)	11,2 (4,1 - 14,0)	14,0 (4,1 - 16,0)	16,0 (4,1 - 18,0)
	3,62	5,85	6,69	9,63	11,80	13,98	6,69	9,63	11,80	13,98
	3,08	5,74	6,80	9,05	10,84	11,42	6,80	9,05	10,84	11,42
	3,8 A	3,8 A	3,7 A	3,9 A	3,63 [4]	3,41 [4]	3,7 A	3,8 A	3,63 [4]	3,41 [4]
	3,8	5,6	6,5	10,0	—	—	6,5	10,0	—	—
	1,740 (0,220 - 2,520)	1,940 (0,500 - 2,585)	2,260 (0,500 - 2,920)	2,950 (0,980 - 4,500)	3,880 (1,050 - 5,400)	4,690 (1,050 - 6,100)	2,260 (0,600 - 3,000)	2,950 (0,980 - 4,500)	3,880 (1,050 - 5,400)	4,690 (1,050 - 6,100)
	1.400	2.061	2.458	3.590	—	—	2.458	3.684	—	—
	50 (10 - 80)	50 (10 - 80)	50 (10 - 80)	50 (10 - 80)	50 (10 - 80)	50 (10 - 80)	50 (10 - 80)	50 (10 - 80)	50 (10 - 80)	50 (10 - 80)
	960 / 960	1.320 / 1.320	1.320 / 1.320	2.160 / 2.160	2.280 / 2.280	2.400 / 2.400	1.320 / 1.320	2.160 / 2.160	2.280 / 2.280	2.400 / 2.400
	2,8	3,4	4,2	6,0	7,9	9,0	4,2	6,0	7,9	9,0
	41 / 39 / 35	43 / 41 / 36	43 / 41 / 36	44 / 42 / 37	45 / 43 / 38	46 / 44 / 39	43 / 41 / 36	44 / 42 / 37	45 / 43 / 38	46 / 44 / 39
	41 / 39 / 35	43 / 41 / 36	43 / 41 / 36	44 / 42 / 37	45 / 43 / 38	46 / 44 / 39	43 / 41 / 36	44 / 42 / 37	45 / 43 / 38	46 / 44 / 39
	58 / 56 / 52	60 / 58 / 53	60 / 58 / 53	65 / 63 / 58	66 / 64 / 59	67 / 65 / 60	60 / 58 / 53	65 / 63 / 58	66 / 64 / 59	67 / 65 / 60
	58 / 56 / 52	60 / 58 / 53	60 / 58 / 53	65 / 63 / 58	66 / 64 / 59	67 / 65 / 60	60 / 58 / 53	65 / 63 / 58	66 / 64 / 59	67 / 65 / 60
	250x780(+100)x650	250x1.000(+100)x650	250x1.000(+100)x650	250x1.200(+100)x650	250x1.200(+100)x650	250x1.200(+100)x650	250x1.000(+100)x650	250x1.200(+100)x650	250x1.200(+100)x650	250x1.200(+100)x650
	29	32	32	41	41	41	32	41	41	41
	220 / 230 / 240	220 / 230 / 240	220 / 230 / 240	220 / 230 / 240	220 / 230 / 240	220 / 230 / 240	380 / 400 / 415	380 / 400 / 415	380 / 400 / 415	380 / 400 / 415
	16	20	20	25	30	16	16	16	16	16
	2,5	2,5	2,5	4	6	2,5	2,5	2,5	2,5	2,5
	7,10 / 6,80 / 6,60	8,20 / 8,00 / 7,80	9,70 / 9,40 / 9,20	11,6 / 11,2 / 10,9	17,4 / 16,9 / 16,4	20,5 / 20,1 / 19,5	3,25 / 3,10 / 3,00	3,95 / 3,75 / 3,60	5,80 / 5,50 / 5,30	6,95 / 6,60 / 6,35
	8,00 / 7,70 / 7,40	8,60 / 8,40 / 8,20	10,2 / 9,90 / 9,70	12,8 / 12,5 / 12,2	17,3 / 16,8 / 16,3	20,6 / 20,2 / 19,6	3,35 / 3,20 / 3,10	4,35 / 4,15 / 4,00	5,80 / 5,50 / 5,30	7,00 / 6,65 / 6,45
	1.800 / 2.100	3.600 / 3.600	3.600 / 3.600	6.600 / 5.700	7.800 / 6.600	8.100 / 7.200	3.600 / 3.600	6.600 / 5.700	7.800 / 6.600	8.100 / 7.200
	46 / 50	48 / 50	48 / 50	52 / 52	53 / 53	54 / 55	48 / 50	52 / 52	53 / 53	54 / 55
	65 / 69	65 / 67	65 / 67	69 / 69	70 / 70	71 / 71	65 / 67	69 / 69	70 / 70	71 / 71
	569 x 790 x 285	996 x 940 x 340	996 x 940 x 340	1.416 x 940 x 340	1.416 x 940 x 340	1.416 x 940 x 340	996 x 940 x 340	1.416 x 940 x 340	1.416 x 940 x 340	1.416 x 940 x 340
	42	68	69	98	98	98	71	98	98	98
	1/4 (6,35)	3/8 (9,52)	3/8 (9,52)	3/8 (9,52)	3/8 (9,52)	3/8 (9,52)	3/8 (9,52)	3/8 (9,52)	3/8 (9,52)	3/8 (9,52)
	1/2 (12,7)	5/8 (15,88)	5/8 (15,88)	5/8 (15,88)	5/8 (15,88)	5/8 (15,88)	5/8 (15,88)	5/8 (15,88)	5/8 (15,88)	5/8 (15,88)
	1,65	2	2,35	3,4	3,4	3,4	2,35	3,4	3,4	3,4
	30	30	30	30	30	30	30	30	30	30
	5 - 40	5 - 50	5 - 50	5 - 75	5 - 75	5 - 75	5 - 50	5 - 75	5 - 75	5 - 75
	30	30	30	30	30	30	30	30	30	30
	20	50	50	50	50	50	50	50	50	50
	-15 / +46	-15 / +46	-15 / +46	-15 / +46	-15 / +46	-15 / +46	-15 / +46	-15 / +46	-15 / +46	-15 / +46
	-20 / +24	-20 / +24	-20 / +24	-20 / +24	-20 / +24	-20 / +24	-20 / +24	-20 / +24	-20 / +24	-20 / +24

level of the units shows the value measured of a position 1 meter in front of the main body and 1,5 m from the ground. The sound pressure is measured in accordance with Eurovent 6/C/006-97 specification. 7) Add 100 mm for piping port. 8) When installing the outdoor unit at a higher position than the indoor unit. // Recommended fuse for the indoor 3A. // * Available from May 2014.
For detailed information about ErP, please visit our page http://www.ptc.panasonic.eu

ELITE

Internet Control Ready — INTERNET CONTROL
Energy saving — INVERTER+
6,00 A+ SEER — SEASONAL ENERGY EFFICIENCY RATIO
5,30 A+++ SCOP — SEASONAL COEFFICIENT OF PERFORMANCE
Down to -15°C in cooling mode — OUTDOOR TEMPERATURE
Down to -20°C in heating mode — OUTDOOR TEMPERATURE
Easy control by BMS — CONNECTIVITY
Possible to use on R22 pipings — R22 RENEWAL
5 year compressor warranty

INTERNET CONTROL READY: Optional. ESEER and SCOP: For KIT-100PN1E5A.



U-50PE1E5



U-60PE1E5A
U-71PE1E5A
U-71PE1E8A



U-100PE1E5A U-100PE1E8A
U-125PE1E5A U-125PE1E8A
U-140PE1E5A U-140PE1E8A

HIGH STATIC PRESSURE HIDE AWAY

PACi STANDARD AND ELITE INVERTER+

The ducted systems are the ideal solution for flexible, concealed air conditioning and the optional 200mm spigots ensure simple, hassle-free connection to spiral ductwork.

Technical Focus

- Extremely quiet operation from 26 dB(A)
- Auto restart after power failure
- Auto changeover
- Twin, triple and double-twin split options
- DC FAN for better efficiency and control
- Built in drain pump
- Easy connection and control of external fan or ERV using the connector PAW-FDC on the indoor unit PCB. The external device can be control by the remote control of the Panasonic indoor unit

STANDARD

			Single Phase				Three Phase		
			6,0 kW	7,1 kW	10,0 kW	12,5 kW	10,0 kW	12,5 kW	14,0 kW
KIT			**KIT-60PFY1E5A***	**KIT-71PFY1E5A***	**KIT-100PFY1E5A***	**KIT-125PFY1E5A***	**KIT-100PFY1E8A***	**KIT-125PFY1E8A***	**KIT-140PFY1E8A***
Indoor			**S-60PF1E5A**	**S-71PF1E5A**	**S-100PF1E5A**	**S-125PF1E5A**	**S-100PF1E5A**	**S-125PF1E5A**	**S-140PF1E5A**
Outdoor			**U-60PEY1E5**	**U-71PEY1E5**	**U-100PEY1E5**	**U-125PEY1E5**	**U-100PEY1E8**	**U-125PEY1E8**	**U-140PEY1E8**
Timer remote controller			**CZ-RTC2**	**CZ-RTC2**	**CZ-RTC2**	**CZ-RTC2**	**CZ-RTC2**	**CZ-RTC2**	**CZ-RTC2**
Cooling capacity	Nominal (Min - Max)	kW	6,0 (2,0 - 7,0)	7,1 (2,0 - 7,7)	10,0 (2,7 - 11,5)	12,5 (3,8 - 13,5)	10,0 (2,7 - 11,5)	12,5 (3,8 - 13,5)	14,0 (3,3 - 15,5)
ESEER	**Nominal (Min - Max)**	**W/W**	**5,4 A**	**5,3 A**	**5,4 A**	**3,66** [1]	**5,2 A**	**3,66** [1]	**3,80** [1]
Pdesign		kW	6,0	7,1	10,0	—	10,0	—	—
Power input cooling	Nominal (Min - Max)	kW	1,930 (0,325 - 2,850)	2,570 (0,325 - 3,270)	3,320 (0,530 - 4,200)	4,100 (0,900 - 5,000)	3,320 (0,530 - 4,200)	4,100 (0,900 - 5,000)	4,350 (0,840 - 6,000)
Annual energy consumption (ErP) [2]		kWh/a	389	469	648	—	673	—	—
Heating capacity	Nominal (Min - Max)	kW	6,0 (1,8 - 7,0)	7,1 (1,8 - 8,1)	10,0 (2,1 - 13,8)	12,5 (3,4 - 15,0)	10,0 (2,1 - 13,8)	12,5 (3,4 - 15,0)	14,0 (4,1 - 16,0)
Heating capacity at -7°C [3]	Nominal	kW	4,39	4,32	7,22	9,14	7,22	9,14	11,68
Heating capacity at -15°C [3]	Nominal	kW	—	—	—	—	—	—	—
SCOP	**Nominal (Min - Max)**	**W/W**	**3,8 A**	**3,8 A**	**3,8 A**	**3,40** [4]	**3,8 A**	**3,40** [4]	**3,52** [4]
Pdesign at -10°C		kW	5,0	5,5	9,5	—	9,5	—	—
Power input heating	Nominal (Min - Max)	kW	1,410 (0,275 - 2,055)	1,800 (0,275 - 2,380)	2,630 (0,410 - 4,000)	3,270 (0,730 - 4,400)	2,630 (0,410 - 4,000)	3,270 (0,730 - 4,400)	3,580 (0,900 - 5,200)
Annual energy consumption (ErP) [2]		kWh/a	1.842	2.026	3.500	—	3.500	—	—
Indoor unit									
External static pressure [5]	Nominal (Min - Max)	Pa	70 (10 - 150)	70 (10 - 150)	100 (10 - 150)	100 (10 - 150)	100 (10 - 150)	100 (10 - 150)	100 (10 - 150)
Air volume	Cooling (Hi / Med / Lo)	m³/h	1.260 / 1.140 / 900	1.260 / 1.140 / 900	1.920 / 1.560 / 1.260	2.040 / 1.740 / 1.380	1.920 / 1.560 / 1.260	2.040 / 1.740 / 1.380	2.160 / 1.920 / 1.500
	Heating (Hi / Med / Lo)	m³/h	1.260 / 1.140 / 900	1.260 / 1.140 / 900	1.920 / 1.560 / 1.260	2.040 / 1.740 / 1.380	1.920 / 1.560 / 1.260	2.040 / 1.740 / 1.380	2.160 / 1.920 / 1.500
Moisture removal volume		l/h	3,4	4,2	6,0	7,9	6,0	7,9	9,0
Sound pressure level [6]	Cooling (Hi / Med / Lo)	dB(A)	35 / 32 / 26	35 / 32 / 26	38 / 34 / 31	39 / 35 / 32	38 / 34 / 31	39 / 35 / 32	40 / 36 / 33
	Heating (Hi / Med / Lo)	dB(A)	35 / 32 / 26	35 / 32 / 26	38 / 34 / 31	39 / 35 / 32	38 / 34 / 31	39 / 35 / 32	40 / 36 / 33
Sound power level	Cooling (Hi / Med / Lo)	dB	57 / 54 / 48	57 / 54 / 48	60 / 56 / 53	61 / 57 / 54	60 / 56 / 53	61 / 57 / 54	62 / 58 / 55
	Heating (Hi / Med / Lo)	dB	57 / 54 / 48	57 / 54 / 48	60 / 56 / 53	61 / 57 / 54	60 / 56 / 53	61 / 57 / 54	62 / 58 / 55
Dimensions	H x W x D	mm	290 x 1.000 x 700	290 x 1.000 x 700	290 x 1.400 x 700	290 x 1.400 x 700	290 x 1.400 x 700	290 x 1.400 x 700	290 x 1.400 x 700
Net weight		kg	33	33	45	45	45	45	45
Outdoor unit									
Power source		V	220 / 230 / 240	220 / 230 / 240	220 / 230 / 240	220 / 230 / 240	380 / 400 / 415	380 / 400 / 415	380 / 400 / 415
Recommended fuse		A	20	20	25	30	16	16	16
Connection		mm²	2,5	2,5	4	6	2,5	2,5	2,5
Current	Cooling	A	9,00 / 8,65 / 8,30	12,2 / 11,7 / 11,2	15,1 / 14,5 / 13,9	18,8 / 18,0 / 17,2	5,10 / 4,85 / 4,70	6,20 / 5,90 / 5,70	6,75 / 6,45 / 6,25
	Heating	A	6,40 / 6,10 / 5,90	8,30 / 7,90 / 7,60	11,8 / 11,2 / 10,7	14,6 / 14,0 / 13,4	4,05 / 3,80 / 3,65	4,90 / 4,65 / 4,50	5,60 / 5,40 / 5,20
Air volume	Cooling / Heating	m³/h	1.800 / 2.100	2.340 / 2.340	4.560 / 4.020	4.800 / 4.380	4.560 / 4.020	4.800 / 4.380	8.100 / 7.200
Sound pressure level	Cooling / Heating (Hi)	dB(A)	46 / 50	50 / 52	54 / 54	56 / 56	54 / 54	56 / 56	54 / 53
Sound power level	Cooling / Heating (Hi)	dB	65 / 69	70 / 70	70 / 70	73 / 73	70 / 70	73 / 73	71 / 70
Dimensions	H x W x D	mm	569 x 790 x 285	569 x 790 x 285	996 x 940 x 340	996 x 940 x 340	996 x 940 x 340	996 x 940 x 340	1.416 x 940 x 340
Net weight		kg	42	42	73	85	73	85	98
Piping connections	Liquid pipe	Inch (mm)	3/8 (9,52)	3/8 (9,52)	3/8 (9,52)	3/8 (9,52)	3/8 (9,52)	3/8 (9,52)	3/8 (9,52)
	Gas pipe	Inch (mm)	5/8 (15,88)	5/8 (15,88)	5/8 (15,88)	5/8 (15,88)	5/8 (15,88)	5/8 (15,88)	5/8 (15,88)
Refrigerant loading	R410A	kg	1,7	1,7	2,60	3,20	2,60	3,20	3,4
Elevation difference (in/out) [7]	Max	m	30	30	30	30	30	30	30
Piping length	Min / Max	m	5 / 50	5 / 50	5 / 50	5 / 50	5 / 50	5 / 50	5 / 50
Precharge length	Max	m	20	20	30	30	30	30	30
Additional charge		g/m	40	40	50	50	50	50	50
Operating range	Cooling Min / Max	°C	-10 / +43	-10 / +43	-10 / +43	-10 / +43	-10 / +43	-10 / +43	-10 / +43
	Heating Min / Max	°C	-15 / +24	-15 / +24	-15 / +24	-15 / +24	-15 / +24	-15 / +24	-15 / +24

Rating Conditions: Cooling Indoor 27°C DB / 19°C WB. Cooling Outdoor 35°C DB / 24°C WB. Heating Indoor 20°C DB. Heating Outdoor 7°C DB / 6°C WB. (DB: Dry Bulb; WB: Wet Bulb). // Specifications subject to change without notice.
1) ESEER is calculated in base Eurovent IPLV for SBEM for U1 indoor unit SEER=a[EER25)+b(EER50)+c[EER75)+d(EER100) where EER25, EER50, EER75 and EER100 are the EER measured value at 25%, 50%, 75% and 100% part load for temperatures 20, 25, 30 and 35°C DB, respectively. a, b, c and d are values assigned for an office type. These values are given as a=0,2, b=0,36, c=0,32 and d=0,03. The internal temperatures are taken at 27°C DB and 19°C WB. 2) The annual consumption(ErP) is calculated by formula determined by ErP regulation. 3) Heating capacity is calculated including defrost factor correction. 4) SCOP is calculated in base Eurovent IPLV for SBEM with U1 indoor unit including defrost correction factor. 5) Medium External static pressure setting from factory. 6) The Sound pressure

STANDARD



INTERNET CONTROL READY: Optional. ESEER and SCOP: For KIT-60PFY1E5A and KIT-100PFY1E5A.

HIGH HEATING CAPACITY AT -7°C



S-100PF1E5A // S-125PF1E5A // S-140PF1E5A



Optional Controller
Wired remote controller
CZ-RTC3



Optional Controller
Timer remote controller
CZ-RTC2



Optional Controller
Wireless remote controller
CZ-RWSK2 + CZ-RWSC3



Optional Controller
Simplified remote controller
CZ-RE2C2

Air Outlet Plenum (without regulation adaptor)		
	Diameters	Model
60 & 71	3 x Ø 200	CZ-90DAF2
100, 125 & 140	4 x Ø 200	CZ-160DAF2

Air Inlet Plenum		
	Diameters	Model
60 & 71	2 x Ø 250	CZ-DUMPA90MF2
100, 125 & 140	4 x Ø 200	CZ-DUMPA160MF2

Compatible with all Panasonic connectivity solutions. For detailed information go to the VRF Control Systems section.

ELITE

Single Phase						Three Phase			
5,0 kW	6,0 kW	7,1 kW	10,0 kW	12,5 kW	14,0 kW	7,1 kW	10,0 kW	12,5 kW	14,0 kW
KIT-50PF1E5A*	KIT-60PF1E5A*	KIT-71PF1E5A*	KIT-100PF1E5A*	KIT-125PF1E5A*	KIT-140PF1E5A*	KIT-71PF1E8A*	KIT-100PF1E8A*	KIT-125PF1E8A*	KIT-140PF1E8A*
S-50PF1E5A	S-60PF1E5A	S-71PF1E5A	S-100PF1E5A	S-125PF1E5A	S-140PF1E5A	S-71PF1E5A	S-100PF1E5A	S-125PF1E5A	S-140PF1E5A
U-50PE1E5	U-60PE1E5A	U-71PE1E5A	U-100PE1E5A	U-125PE1E5A	U-140PE1E5A	U-71PE1E8A	U-100PE1E8A	U-125PE1E8A	U-140PE1E8A
CZ-RTC2	CZ-RTC2	CZ-RTC2	CZ-RTC2	CZ-RTC2	CZ-RTC2	CZ-RTC2	CZ-RTC2	CZ-RTC2	CZ-RTC2
5,0 (1,5 - 5,6)	6,0 (2,5 - 7,1)	7,1 (2,5 - 8,0)	10,0 (3,3 - 12,5)	12,5 (3,3 - 14,0)	14,0 (3,3 - 15,5)	7,1 (3,2 - 8,0)	10,0 (3,3 - 12,5)	12,5 (3,3 - 14,0)	14,0 (3,3 - 15,5)
5,7 A+	6,4 A++	6,4 A++	5,8 A+	4,26 [1]	3,84 [1]	5,2 A	5,8 A+	4,26 [1]	3,84 [1]
5,0	6,0	7,1	10,0	—	—	7,1	10,0	—	—
1,350 (0,260 - 2,000)	1,540 (0,530 - 2,000)	1,850 (0,530 - 2,650)	2,440 (0,840 - 3,700)	3,570 (0,840 - 4,600)	4,310 (0,840 - 6,000)	1,850 (0,640 - 2,650)	2,440 (0,840 - 3,700)	3,570 (0,840 - 4,600)	4,310 (0,840 - 6,000)
307	328	388	603	—	—	414	614	—	—
5,6 (1,5 - 6,5)	7,0 (2,0 - 8,0)	8,0 (2,0 - 9,0)	11,2 (4,1 - 14,0)	14,0 (4,1 - 16,0)	16,0 (4,1 - 18,0)	8,0 (2,8 - 9,0)	11,2 (4,1 - 14,0)	14,0 (4,1 - 16,0)	16,0 (4,1 - 18,0)
3,62	5,85	6,69	9,63	11,80	13,98	6,69	9,63	11,80	13,98
3,08	5,74	6,80	9,05	10,84	11,42	6,80	9,05	10,84	11,42
3,8 A	3,9 A	4,0 A+	3,8 A	3,63 [4]	3,41 [4]	3,7 A	3,8 A	3,63 [4]	3,41 [4]
4,0	6,0	7,1	10,0	—	—	7,1	10,0	—	—
1,500 (0,220 - 2,400)	1,810 (0,480 - 2,480)	2,080 (0,480 - 2,900)	2,600 (0,900 - 4,400)	3,480 (0,900 - 5,200)	4,440 (0,900 - 5,900)	2,080 (0,580 - 2,900)	2,600 (0,900 - 4,400)	3,480 (0,900 - 5,200)	4,440 (0,900 - 5,900)
1.474	2.154	2.485	3.684	—	—	2.548	3.684	—	—
70 (10 - 150)	70 (10 - 150)	70 (10 - 150)	100 (10 - 150)	100 (10 - 150)	100 (10 - 150)	70 (10 - 150)	100 (10 - 150)	100 (10 - 150)	100 (10 - 150)
960 / 900 / 720	1.260 / 1.140 / 900	1.260 / 1.140 / 900	1.920 / 1.560 / 1.260	2.040 / 1.740 / 1.380	2.160 / 1.920 / 1.500	1.260 / 1.140 / 900	1.920 / 1.560 / 1.260	2.040 / 1.740 / 1.380	2.160 / 1.920 / 1.500
960 / 900 / 720	1.260 / 1.140 / 900	1.260 / 1.140 / 900	1.920 / 1.560 / 1.260	2.040 / 1.740 / 1.380	2.160 / 1.920 / 1.500	1.260 / 1.140 / 900	1.920 / 1.560 / 1.260	2.040 / 1.740 / 1.380	2.160 / 1.920 / 1.500
2,8	3,4	4,2	6,0	7,9	9,0	4,2	6,0	7,9	9,0
34 / 30 / 26	35 / 32 / 26	35 / 32 / 26	38 / 34 / 31	39 / 35 / 32	40 / 36 / 33	35 / 32 / 26	38 / 34 / 31	39 / 35 / 32	40 / 36 / 33
34 / 30 / 26	35 / 32 / 26	35 / 32 / 26	38 / 34 / 31	39 / 35 / 32	40 / 36 / 33	35 / 32 / 26	38 / 34 / 31	39 / 35 / 32	40 / 36 / 33
56 / 52 / 48	57 / 54 / 48	57 / 54 / 48	60 / 56 / 53	61 / 57 / 54	62 / 58 / 55	57 / 54 / 48	60 / 56 / 53	61 / 57 / 54	62 / 58 / 55
56 / 52 / 48	57 / 54 / 48	57 / 54 / 48	60 / 56 / 53	61 / 57 / 54	62 / 58 / 55	57 / 54 / 48	60 / 56 / 53	61 / 57 / 54	62 / 58 / 55
290 x 800 x 700	290 x 1.000 x 700	290 x 1.000 x 700	290 x 1.400 x 700	290 x 1.400 x 700	290 x 1.400 x 700	290 x 1.000 x 700	290 x 1.400 x 700	290 x 1.400 x 700	290 x 1.400 x 700
28	33	33	45	45	45	33	45	45	45
220 / 230 / 240	220 / 230 / 240	220 / 230 / 240	220 / 230 / 240	220 / 230 / 240	220 / 230 / 240	380 / 400 / 415	380 / 400 / 415	380 / 400 / 415	380 / 400 / 415
16	20	20	25	30	16	16	16	16	16
2,5	2,5	2,5	4	6	2,5	2,5	2,5	2,5	2,5
6,10 / 5,85 / 5,60	7,70 / 7,40 / 7,10	8,90 / 8,60 / 8,30	11,0 / 10,6 / 10,3	16,6 / 15,9 / 15,3	20,1 / 19,3 / 18,6	2,75 / 2,65 / 2,60	3,68 / 3,53 / 3,43	5,52 / 5,29 / 5,12	6,69 / 6,42 / 6,18
6,85 / 6,55 / 6,25	8,70 / 8,40 / 8,10	9,90 / 9,50 / 9,20	11,6 / 11,2 / 10,7	16,3 / 15,8 / 15,1	19,9 / 19,1 / 18,4	3,10 / 3,00 / 2,90	3,86 / 3,70 / 3,58	5,44 / 5,26 / 5,05	6,64 / 6,35 / 6,15
1.800 / 2.100	3.600 / 3.600	3.600 / 3.600	6.600 / 5.700	7.800 / 6.600	8.100 / 7.200	3.600 / 3.600	6.600 / 5.700	7.800 / 6.600	8.100 / 7.200
46 / 50	48 / 50	48 / 50	52 / 52	53 / 53	54 / 55	48 / 50	52 / 52	53 / 53	54 / 55
65 / 69	65 / 67	65 / 67	69 / 69	70 / 70	71 / 71	65 / 67	69 / 69	70 / 70	71 / 71
569 x 790 x 285	996 x 940 x 340	996 x 940 x 340	1.416 x 940 x 340	1.416 x 940 x 340	1.416 x 940 x 340	996 x 940 x 340	1.416 x 940 x 340	1.416 x 940 x 340	1.416 x 940 x 340
42	68	69	98	98	98	71	98	98	98
1/4 (6,35)	3/8 (9,52)	3/8 (9,52)	3/8 (9,52)	3/8 (9,52)	3/8 (9,52)	3/8 (9,52)	3/8 (9,52)	3/8 (9,52)	3/8 (9,52)
1/2 (12,7)	5/8 (15,88)	5/8 (15,88)	5/8 (15,88)	5/8 (15,88)	5/8 (15,88)	5/8 (15,88)	5/8 (15,88)	5/8 (15,88)	5/8 (15,88)
1,65	2	2,35	3,4	3,4	3,4	2,35	3,4	3,4	3,4
30	30	30	30	30	30	30	30	30	30
5 / 40	5 / 50	5 / 50	5 / 75	5 / 75	5 / 75	5 / 50	5 / 75	5 / 75	5 / 75
30	30	30	30	30	30	30	30	30	30
20	50	50	50	50	50	50	50	50	50
-15 / +46	-15 / +46	-15 / +46	-15 / +46	-15 / +46	-15 / +46	-15 / +46	-15 / +46	-15 / +46	-15 / +46
-20 / +24	-20 / +24	-20 / +24	-20 / +24	-20 / +24	-20 / +24	-20 / +24	-20 / +24	-20 / +24	-20 / +24

level of the units shows the value measured of a position 1 meter in front of the main body and 1,5 m from the ground. The sound pressure is measured in accordance with Eurovent 6/C/006-97 specification. 7) When installing the outdoor unit at a higher position than the indoor unit. // Recommended fuse for the indoor 3A. // * Available from May 2014.
For detailed information about ErP, please visit our page http://www.ptc.panasonic.eu

ELITE

Internet Control Ready — INTERNET CONTROL
Energy saving — INVERTER+
6,40 A++ SEER — SEASONAL ENERGY EFFICIENCY RATIO
4,00 A+ SCOP* — SEASONAL COEFFICIENT OF PERFORMANCE
Down to -15°C in cooling mode — OUTDOOR TEMPERATURE
Down to -20°C in heating mode — OUTDOOR TEMPERATURE
Easy control by BMS — CONNECTIVITY
Possible to use on R22 pipings — R22 RENEWAL
5 year compressor warranty

INTERNET CONTROL READY: Optional. ESEER and SCOP: For KIT-71PF1E5A.



U-50PE1E5



U-60PE1E5A
U-71PE1E5A
U-71PE1E8A



U-100PE1E5A U-100PE1E8A
U-125PE1E5A U-125PE1E8A
U-140PE1E5A U-140PE1E8A

CEILING
PACi STANDARD AND ELITE INVERTER+

This range of ceiling mounted units feature a DC fan motor for increased efficiency and reduced operating sound levels. All the units are the same height and depth for a uniform appearance in mixed installations. A knock out is provided to allow for supplementary fresh air for improved air quality.

Technical Focus

- Fresh air connection possible (Outside intake duct connection port of 100mm diameter is available on the unit)
- All units just 235 mm high
- Twin rotary compressor dramatically reduces vibration and noise during operation
- DC inverter control
- Large and wide air distribution
- Industry-leading low sound levels
- Twin, Triple and Double-twin split options
- Easy connection and control of external fan or ERV using the connector PAW-FDC on the indoor unit PCB. The external device can be control by the remote control of the Panasonic indoor unit

STANDARD

			Single Phase				Three Phase		
			6,0 kW	7,1 kW	10,0 kW	12,5 kW	10,0 kW	12,5 kW	14,0 kW
KIT			**KIT-60PTY2E5A***	**KIT-71PTY2E5A***	**KIT-100PTY2E5A***	**KIT-125PTY2E5A***	**KIT-100PTY2E8A***	**KIT-125PTY2E8A***	**KIP-140PTY2E8A***
Indoor			**S-60PT2E5A**	**S-71PT2E5A**	**S-100PT2E5A**	**S-125PT2E5A**	**S-100PT2E5A**	**S-125PT2E5A**	**S-140PT2E5A**
Outdoor			**U-60PEY1E5**	**U-71PEY1E5**	**U-100PEY1E5**	**U-125PEY1E5**	**U-100PEY1E8**	**U-125PEY1E8**	**U-140PEY1E8**
Timer remote controller			**CZ-RTC2**	**CZ-RTC2**	**CZ-RTC2**	**CZ-RTC2**	**CZ-RTC2**	**CZ-RTC2**	**CZ-RTC2**
Cooling capacity	Nominal (Min - Max)	kW	6,0 (2,0 - 7,0)	7,1 (2,2 - 7,7)	10,0 (2,7 - 11,5)	12,5 (3,8 - 13,5)	10,0 (2,7 - 11,5)	12,5 (3,8 - 13,5)	14,0 (3,3 - 15,0)
ESEER	Nominal (Min - Max)	**W/W**	**6,7** A++	**6,1** A++	**6,1** A++	**3,66** [1]	**6,0** A+	**3,66** [1]	**3,80** [1]
Pdesign		kW	6,0	7,1	10,0	—	10,0	—	—
Power input cooling	Nominal (Min - Max)	kW	1,660 (0,325 - 2,500)	2,210 (0,325 - 2,820)	3,320 (0,530 - 4,340)	4,150 (0,900 - 5,160)	3,320 (0,530 - 4,340)	4,150 (0,900 - 5,160)	4,700 (0,840 - 5,700)
Annual energy consumption (ErP) [2]		kWh/a	314	408	574	—	584	—	—
Heating capacity	Nominal (Min - Max)	kW	6,0 (1,8 - 7,0)	7,1 (1,8 - 8,1)	10,0 (2,1 - 13,8)	12,5 (3,4 - 15,0)	10,0 (2,1 - 13,8)	12,5 (3,4 - 15,0)	14,0 (4,1 - 16,0)
Heating capacity at -7°C [3]	Nominal	kW	4,39	4,32	7,22	9,14	7,22	9,14	11,68
Heating capacity at -15°C [3]	Nominal	kW	—	—	—	—	—	—	—
SCOP	Nominal (Min - Max)	**W/W**	**4,0** A+	**4,0** A+	**3,9** A	**3,40** [4]	**3,9** A	**3,40** [4]	**3,52** [4]
Pdesign at -10°C		kW	6,0	6,0	10,0	—	10,0	—	—
Power input heating	Nominal (Min - Max)	kW	1,430 (0,275 - 2,155)	1,820 (0,275 - 2,510)	2,600 (0,410 - 4,000)	3,250 (0,730 - 4,400)	2,600 (0,410 - 4,000)	3,250 (0,730 - 4,400)	3,610 (0,900 - 5,210)
Annual energy consumption (ErP) [2]		kWh/a	2.100	2.100	3.590		3.590		—
Indoor unit									
Air volume	Cooling (Hi / Med / Lo)	m³/h	1.200 / 1.020 / 870	1.260 / 1.080 / 930	1.800 / 1.500 / 1.380	2.040 / 1.680 / 1.440	1.800 / 1.500 / 1.380	2.040 / 1.680 / 1.440	2.100 / 1.740 / 1.500
	Heating (Hi / Med / Lo)		1.200 / 1.020 / 870	1.260 / 1.080 / 930	1.800 / 1.500 / 1.380	2.040 / 1.680 / 1.440	1.800 / 1.500 / 1.380	2.040 / 1.680 / 1.440	2.100 / 1.740 / 1.500
Moisture removal volume		l/h	3,4	4,2	6,0	7,9	6,0	7,9	9,0
Sound pressure level [5]	Cooling (Hi / Med / Lo)	dB(A)	38 / 34 / 30	39 / 35 / 31	42 / 37 / 35	46 / 40 / 36	42 / 37 / 35	46 / 40 / 36	47 / 41 / 37
	Heating (Hi / Med / Lo)	dB(A)	38 / 34 / 30	39 / 35 / 31	42 / 37 / 35	46 / 40 / 36	42 / 37 / 35	46 / 40 / 36	47 / 41 / 37
Sound power level	Cooling (Hi / Med / Lo)	dB	56 /52 / 48	57 / 53 / 49	60 / 55 / 53	64 / 58 / 54	60 / 55 / 53	64 / 58 / 54	65 / 59 / 55
	Heating (Hi / Med / Lo)	dB	56 /52 / 48	57 / 53 / 49	60 / 55 / 53	64 / 58 / 54	60 / 55 / 53	64 / 58 / 54	65 / 59 / 55
Dimensions	H x W x D	mm	235 x 1.275 x 690	235 x 1.275 x 690	235 x 1.590 x 690	230 x 1.590 x 690	235 x 1.590 x 690	230 x 1.590 x 690	360 x 1.655 x 820
Net weight		kg	33	33	40	40	40	40	40
Outdoor unit									
Power source		V	220 / 230 / 240	220 / 230 / 240	220 / 230 / 240	220 / 230 / 240	380 / 400 / 415	380 / 400 / 415	380 / 400 / 415
Recommended fuse		A	20	20	25	30	16	16	16
Connection		mm²	2,5	2,5	4	6	2,5	2,5	2,5
Current	Cooling	A	8,05 / 7,70 / 7,40	10,8 / 10,3 / 9,85	15,6 / 15,0 / 14,4	19,7 / 18,9 / 18,1	5,30 / 5,05 / 4,85	6,50 / 6,20 / 6,00	7,40 / 7,00 / 6,80
	Heating	A	6,90 / 6,60 / 6,30	8,75 / 8,35 / 8,00	11,9 / 11,5 / 11,1	15,2 / 14,6 / 13,9	4,10 / 3,90 / 3,75	5,10 / 4,80 / 4,65	5,65 / 5,35 / 5,15
Air volume	Cooling / Heating	m³/h	1.800 / 2.100	2.340 / 2.340	4.560 / 4.020	4.800 / 4.380	4.560 / 4.020	4.800 / 4.380	8.100 / 7.200
Sound pressure level	Cooling / Heating (Hi)	dB(A)	46 / 50	50 / 52	54 / 54	56 / 56	54 / 54	56 / 56	54 / 53
Sound power level	Cooling / Heating (Hi)	dB	65 / 69	70 / 70	70 / 70	73 / 73	70 / 70	73 / 73	71 / 70
Dimensions	H x W x D	mm	569 x 790 x 285	569 x 790 x 285	996 x 940 x 340	996 x 940 x 340	996 x 940 x 340	996 x 940 x 340	1.416 x 940 x 340
Net weight		kg	42	42	73	85	73	85	98
Piping connections	Liquid pipe	Inch (mm)	3/8 (9,52)	3/8 (9,52)	3/8 (9,52)	3/8 (9,52)	3/8 (9,52)	3/8 (9,52)	3/8 (9,52)
	Gas pipe	Inch (mm)	5/8 (15,88)	5/8 (15,88)	5/8 (15,88)	5/8 (15,88)	5/8 (15,88)	5/8 (15,88)	5/8 (15,88)
Refrigerant loading	R410A	kg	1,70	1,70	2,60	3,20	2,60	3,20	3,40
Elevation difference (in/out) [6]	Max	m	30	30	30	30	30	30	30
Piping length	Min / Max	m	5 / 50	5 / 50	5 / 50	5 / 50	5 / 50	5 / 50	5 / 50
Precharge length	Max	m	20	20	30	30	30	30	30
Additional charge		g/m	40	40	50	50	50	50	50
Operating range	Cooling Min / Max	°C	-10 / +43	-10 / +43	-10 / +43	-10 / +43	-10 / +43	-10 / +43	-10 / +43
	Heating Min / Max	°C	-15 / +24	-15 / +24	-15 / +24	-15 / +24	-15 / +24	-15 / +24	-15 / +24

Rating Conditions: Cooling Indoor 27°C DB / 19°C WB. Cooling Outdoor 35°C DB / 24°C WB. Heating Indoor 20°C DB. Heating Outdoor 7°C DB / 6°C WB. (DB: Dry Bulb; WB: Wet Bulb). // Specifications subject to change without notice.
1) ESEER is calculated in base Eurovent IPLV for SBEM for U1 indoor unit SEER=a[EER25)+b[EER50)+c[EER75)+d[EER100) where EER25, EER50, EER75 and EER100 are the EER measured value at 25%, 50%, 75% and 100% part load for temperatures 20, 25, 30 and 35°C DB, respectively. a, b, c and d are values assigned for an office type. These values are given as a=0,2, b=0,36, c=0,32 and d=0,03. The internal temperatures are taken at 27°C DB and 19°C WB. 2) The annual consumption(ErP) is calculated by formula determined by ErP regulation. 3) Heating capacity is calculated including defrost factor correction. 4) SCOP is calculated in base Eurovent IPLV for SBEM with U1 indoor unit including defrost correction factor. 5) The Sound pressure level of the units shows the value measured of a position

STANDARD



INTERNET CONTROL READY: Optional. ESEER and SCOP: For KIT-100PTY2E5A.

HIGH HEATING CAPACITY AT -7°C



Optional Controller
Wired remote controller
CZ-RTC3



Optional Controller
Timer remote controller
CZ-RTC2



Optional Controller
Wireless remote controller
CZ-RWST3



Optional Controller
Simplified remote controller
CZ-RE2C2



Compatible with all Panasonic connectivity solutions. For detailed information go to the VRF Control Systems section.

ELITE

Single Phase						Three Phase			
5,0 kW	6,0 kW	7,1 kW	10,0 kW	12,5 kW	14,0 kW	7,1 kW	10,0 kW	12,5 kW	14,0 kW
KIT-50PT2E5A*	KIT-60PT2E5A*	KIT-71PT2E5A*	KIT-100PT2E5A*	KIT-125PT2E5A*	KIT-140PT2E5A*	KIT-71PT2E8A*	KIT-100PT2E8A*	KIT-125PT2E8A*	KIT-140PT2E8A*
S-50PT2E5A	S-60PT2E5A	S-71PT2E5A	S-100PT2E5A	S-125PT2E5A	S-140PT2E5A	S-71PT2E5A	S-100PT2E5A	S-125PT2E5A	S-140PT2E5A
U-50PE1E5	U-60PE1E5A	U-71PE1E5A	U-100PE1E5A	U-125PE1E5A	U-140PE1E5A	U-71PE1E8A	U-100PE1E8A	U-125PE1E8A	U-140PE1E8A
CZ-RTC2	CZ-RTC2	CZ-RTC2	CZ-RTC2	CZ-RTC2	CZ-RTC2	CZ-RTC2	CZ-RTC2	CZ-RTC2	CZ-RTC2
5,0 (1,5 - 5,6)	6,0 (2,5 - 7,1)	7,1 (2,5 - 8,0)	10,0 (3,3 - 12,5)	12,5 (3,3 - 14,0)	14,0 (3,3 - 15,0)	7,1 (2,5 - 8,0)	10,0 (3,3 - 12,5)	12,5 (3,3 - 14,0)	14,0 (3,3 - 15,0)
6,4 A++	6,8 A++	6,2 A++	6,7 A++	4,26 [1]	3,84 [1]	5,9 A+	6,6 A++	4,26 [1]	3,84 [1]
5,0	6,0	7,1	10,0	—	—	7,1	10,0	—	—
1,380 (0,260 - 2,050)	1,490 (0,450 - 2,010)	1,930 (0,450 - 2,780)	2,530 (0,840 - 3,850)	3,730 (0,840 - 4,860)	4,650 (0,840 - 5,650)	1,930 (0,450 - 2,780)	2,530 (0,840 - 3,850)	3,730 (0,840 - 4,860)	4,650 (0,840 - 5,650)
273	309	965	523	—	—	421	531	—	—
5,6 (1,5 - 6,5)	7,0 (2,0 - 8,0)	8,0 (2,0 - 9,0)	11,2 (4,1 - 14,0)	14,0 (4,1 - 16,0)	16,0 (4,1 - 18,0)	8,0 (2,0 - 9,0)	11,2 (4,1 - 14,0)	14,0 (4,1 - 16,0)	16,0 (4,1 - 18,0)
3,62	5,85	6,69	9,63	11,80	13,98	6,69	9,63	11,80	13,98
3,08	5,74	6,80	9,05	10,84	11,42	6,80	9,05	10,84	11,42
4,0 A	4,1 A+	4,0 A+	4,3 A+	3,63 [4]	3,41 [4]	4,0 A+	4,3 A+	3,63 [4]	3,41 [4]
4,0	6,0	7,1	10,0	—	—	7,1	10,0	—	—
1,410 (0,220 - 2,300)	1,740 (0,400 - 2,480)	1,930 (0,400 - 2,900)	2,600 (0,900 - 4,400)	3,510 (0,900 - 5,210)	4,360 (0,900 - 5,930)	1,930 (0,400 - 2,900)	2,600 (0,900 - 4,400)	3,510 (0,900 - 5,210)	4,360 (0,900 - 5,930)
1.400	2.049	2.485	3.256	—	—	2.485	3.256	—	—
900 / 750 / 630	1.200 / 1.020 / 870	1.260 / 1.080 / 930	1.800 / 1.500 / 1.380	2.040 / 1.680 / 1.440	2.100 / 1.740 / 1.500	1.260 / 1.080 / 930	1.800 / 1.500 / 1.380	2.040 / 1.680 / 1.440	2.100 / 1.740 / 1.500
900 / 750 / 630	1.200 / 1.020 / 870	1.260 / 1.080 / 930	1.800 / 1.500 / 1.380	2.040 / 1.680 / 1.440	2.100 / 1.740 / 1.500	1.260 / 1.080 / 930	1.800 / 1.500 / 1.380	2.040 / 1.680 / 1.440	2.100 / 1.740 / 1.500
2,8	3,4	4,2	6,0	7,9	9,0	4,2	6,0	7,9	9,0
37 / 33 / 29	38 / 34 / 30	39 / 35 / 31	42 / 37 / 35	46 / 40 / 36	47 / 41 / 37	39 / 35 / 31	42 / 37 / 35	46 / 40 / 36	47 / 41 / 37
37 / 33 / 29	38 / 34 / 30	39 / 35 / 31	42 / 37 / 35	46 / 40 / 36	47 / 41 / 37	39 / 35 / 31	42 / 37 / 35	46 / 40 / 36	47 / 41 / 37
55 / 51 / 47	56 /52 / 48	57 / 53 / 49	60 / 55 / 53	64 / 58 / 54	65 / 59 / 55	57 / 53 / 49	60 / 55 / 53	64 / 58 / 54	65 / 59 / 55
55 / 51 / 47	56 /52 / 48	57 / 53 / 49	60 / 55 / 53	64 / 58 / 54	65 / 59 / 55	57 / 53 / 49	60 / 55 / 53	64 / 58 / 54	65 / 59 / 55
235 x 960 x 690	235 x 1.275 x 690	235 x 1.275 x 690	235 x 1.590 x 690	230 x 1.590 x 690	360 x 1.655 x 820	235 x 1.275 x 690	235 x 1.590 x 690	230 x 1.590 x 690	360 x 1.655 x 820
27	33	33	40	40	40	33	40	40	40
220 / 230 / 240	220 / 230 / 240	220 / 230 / 240	220 / 230 / 240	220 / 230 / 240	220 / 230 / 240	380 / 400 / 415	380 / 400 / 415	380 / 400 / 415	380 / 400 / 415
16	20	20	25	30	16	16	16	16	16
2,5	2,5	2,5	4	6	2,5	2,5	2,5	2,5	2,5
6,55 / 6,25 / 6,00	7,15 / 6,90 / 6,70	9,00 / 8,70 / 8,40	11,5 / 11,1 / 10,6	17,0 / 16,4 / 15,8	21,2 / 20,5 / 19,8	3,00 / 2,90 / 2,80	3,95 / 3,75 / 3,65	5,85 / 5,55 / 5,35	7,30 / 6,95 / 6,70
6,70 / 6,40 / 6,15	8,10 / 7,80 / 7,60	8,90 / 8,60 / 8,30	11,8 / 11,4 / 11,0	16,0 / 15,4 / 14,9	19,8 / 19,2 / 18,5	3,00 / 2,90 / 2,80	4,05 / 3,85 / 3,75	5,50 / 5,20 / 5,05	6,85 / 6,50 / 6,25
1.800 / 2.100	3.600 / 3.600	3.600 / 3.600	6.600 / 5.700	7.800 / 6.600	8.100 / 7.200	3.600 / 3.600	6.600 / 5.700	7.800 / 6.600	8.100 / 7.200
46 / 50	48 / 50	48 / 50	52 / 52	53 / 53	54 / 55	48 / 50	52 / 52	53 / 53	54 / 55
65 / 69	65 / 67	65 / 67	69 / 69	70 / 70	71 / 71	65 / 67	69 / 69	70 / 70	71 / 71
569 x 790 x 285	996 x 940 x 340	996 x 940 x 340	1.416 x 940 x 340	1.416 x 940 x 340	1.416 x 940 x 340	996 x 940 x 340	1.416 x 940 x 340	1.416 x 940 x 340	1.416 x 940 x 340
42	68	69	98	98	98	71	98	98	98
1/4 (6,35)	3/8 (9,52)	3/8 (9,52)	3/8 (9,52)	3/8 (9,52)	3/8 (9,52)	3/8 (9,52)	3/8 (9,52)	3/8 (9,52)	3/8 (9,52)
1/2 (12,7)	5/8 (15,88)	5/8 (15,88)	5/8 (15,88)	5/8 (15,88)	5/8 (15,88)	5/8 (15,88)	5/8 (15,88)	5/8 (15,88)	5/8 (15,88)
1,65	2,00	2,35	3,40	3,40	3,40	2,35	3,40	3,40	3,40
30	30	30	30	30	30	30	30	30	30
5 / 40	5 / 50	5 / 50	5 / 75	5 / 75	5 / 75	5 / 50	5 / 75	5 / 75	5 / 75
30	30	30	30	30	30	30	30	30	30
20	50	50	50	50	50	50	50	50	50
-15 / +46	-15 / +46	-15 / +46	-15 / +46	-15 / +46	-15 / +46	-15 / +46	-15 / +46	-15 / +46	-15 / +46
-20 / +24	-20 / +24	-20 / +24	-20 / +24	-20 / +24	-20 / +24	-20 / +24	-20 / +24	-20 / +24	-20 / +24

1 meter in front of the main body and 1,5 m from the ground. The sound pressure is measured in accordance with Eurovent 6/C/006-97 specification. 6) When installing the outdoor unit at a higher position than the indoor unit. // Recommended fuse for the indoor 3A. // * Available from May 2014.
For detailed information about ErP, please visit our page http://www.ptc.panasonic.eu

ELITE

Internet Control Ready — INTERNET CONTROL
Energy saving — INVERTER+
6,80 A++ SEER — SEASONAL ENERGY EFFICIENCY RATIO
4,10 A+ SCOP — SEASONAL COEFFICIENT OF PERFORMANCE
Down to -15°C in cooling mode — OUTDOOR TEMPERATURE
Down to -20°C in heating mode — OUTDOOR TEMPERATURE
Easy control by BMS — CONNECTIVITY
Possible to use on R22 pipings — R22 RENEWAL
5 year compressor warranty

INTERNET CONTROL READY: Optional. ESEER and SCOP: For KIT-60PT2E5A.



U-50PE1E5



U-60PE1E5A
U-71PE1E5A
U-71PE1E8A



U-100PE1E5A U-100PE1E8A
U-125PE1E5A U-125PE1E8A
U-140PE1E5A U-140PE1E8A

HIGH STATIC PRESSURE HIDE AWAY 20-25kW

BIG PACi INVERTER+

Panasonic breaks new ground in offering high performance and power in a small space. The 20-25kW from Panasonic is ideally suited for large retail applications and other large areas not needing the higher capacities of VRF systems. The lightweight and compact design enables easier installation in any commercial space. The twin fan system saves valuable footprint compared to traditional 20-25kW systems which are larger and therefore require more space.



INTERNET CONTROL READY: Optional.

			Three Phase			
			20,0 kW	25,0 kW	20,0 kW	25,0 kW
KIT			**KIT-200PE1E8A**	**KIT-250PE1E8**	**KIT-200PE1E8A**	**KIT-250PE1E8**
Indoor			**S-200PE1E8A**	**S-250PE1E8**	**S-200PE2E5***	**S-250PE2E5***
Outdoor			**U-200PE1E8**	**U-250PE1E8**	**U-200PE1E8**	**U-250PE1E8**
Timer remote controller			**CZ-RTC2**	**CZ-RTC2**	**CZ-RTC2**	**CZ-RTC2**
Cooling capacity	Nominal (Min - Max)	kW	20,0 (6,0 - 22,4)	25,0 (6,0 - 28,0)	19,5	25,0
EER	Nominal	W/W	3.04	3.09	3.04	3.09
ESEER [1]		**W/W**	**3,29**	**3,08**		
Power input cooling	Nominal	kW	7,640	9,550	6,14	8,09
Running amperes		A	11,8	14,8	—	—
Heating capacity	Nominal (Min - Max)	kW	21,8 (6,0 - 22,4)	28,0 (6,0 - 31,5)	22,4	28,0
Heating capacity at -7°C [2]	Nominal	kW	15,53	19,42	15,53	19,42
COP	Nominal	W/W	3.48	3.84	3.48	3.84
SCOP [3]		**W/W**	**3,11**	**3,09**		
Power input heating	Nominal	kW	6,15	8,20	6,44	7,29
Running amperes		A	9,5	12,6	—	—
Indoor unit						
Power source		V / ph / Hz	220 / 240 / 1 / 50	220 / 240 / 1 / 50	220 / 230 / 240 / 1 / 50	220 / 230240 / 1 / 50
External static pressure at shipment (with booster cable)		Pa	216 (235)	216 (235)	50 (140 / 270 available)	50 (140 / 270 available)
Air volume	Cooling/Heating	m³/h	4.320	4.320	3.360 / 3.360	4.320 / 4.320
Moisture removal volume	Cooling	l/h	11,1	13,9	—	—
Sound pressure level [4]	Hi / Med / Lo	dB(A)	51 / 50 / 49	51 / 50 / 49	44 / 43 / 41	46 / 45 / 43
Sound power level		dB(A)	82	82	—	—
Dimensions	H x W x D	mm	479 x 1.428 x 1.230	479 x 1.428 x 1.230	479 x 1.453 x 1205	479 x 1.453 x 1205
Net weight		kg	120	120	105	110
Outdoor unit						
Power source		V / ph / Hz	380 / 415 / 3+N / 50/60	380 / 415 / 3+N / 50/60	380 / 415 / 3+N / 50/60	380 / 415 / 3+N / 50/60
Recommended fuse		A	15	20	15	20
Air volume	Cooling / Heating	m³/h	7.740	7.080	7740	7080
Sound pressure level [4]	Cooling / Heating (Hi)	dB(A)	57 / 57	57 / 58	57 / 57	57 / 58
Sound power level	(Hi)	dB	72	73	72	73
Dimensions [5]	H x W x D	mm	1.526 x 940 x 340	1.526 x 940 x 340	1.526 x 940 x 340	1.526 x 940 x 340
Net weight		kg	118	128	118	128
Piping connections	Liquid pipe	mm (Inch)	9,52 (3/8)	12,7 (1/2)	9,52 (3/8)	12,7 (1/2)
	Gas pipe	mm (Inch)	25,4 (1)	25,4 (1)	25,4 (1)	25,4 (1)
Refrigerant loading		kg	5,3	6,5	5.3	6.5
Elevation difference (in/out) [6]	Max	m	30	30	30	30
Piping length	Min - Max	m	5 - 100	5 - 100	5 - 100	5 - 100
Precharge length	Max	m	30	30	30	30
Additional charge		g/m	40	80	40	80
Operating range	Cooling Min / Max	°C	-15 / +43	-15 / +43	-15 / +43	-15 / +43
	Heating Min / Max	°C	-20 / +15	-20 / +15	-20 / +15	-20 / +15

Rating Conditions: Cooling Indoor 27°C DB / 19°C WB. Cooling Outdoor 35°C DB / 24°C WB. Heating Indoor 20°C DB. Heating Outdoor 7°C DB / 6°C WB. (DB: Dry Bulb; WB: Wet Bulb)
1) ESEER is calculated in base Eurovent IPLV for SBEM for U1 indoor unit SEER=a(EER25)+b(EER50)+c(EER75)+d(EER100) where EER25, EER50, EER75 and EER100 are the EER measured value at 25%, 50%, 75% and 100% part load for temperatures 20, 25, 30 and 35°C DB, respectively. a, b, c and d are values assigned for an office type. These values are given as a=0,2, b=0,36, c=0,32 and d=0,03. The internal temperatures are taken at 27°C DB and 19°C WB. 2) Heating capacity is calculated including defrost factor correction. 3) SCOP is calculated in base Eurovent IPLV for SBEM with U1 indoor unit including defrost correction factor. 4) The sound pressure Level of the units shows the value measured of a position 1 meter in front of the main body and 1,5 m from the ground. The sound pressure is measured in accordance with Eurovent 6/C/006-97 specification. 5) Add 100 mm for indoor unit or 70 mm for outdoor unit for piping port. 6) When installing the outdoor unit at a higher position than the indoor unit.
* Available from November 2014. Tentative data.
Specifications subject to change without notice.
For detailed information about ErP, please visit our page http://www.ptc.panasonic.eu

HIGH HEATING CAPACITY AT -7°C





Optional Controller
Wired remote controller
CZ-RTC3



Optional Controller
Timer remote controller
CZ-RTC2



Optional Controller
Wireless remote controller
CZ-RWSK2 + CZ-RWSC3



Optional Controller
Simplified remote controller
CZ-RE2C2

Compatible with all Panasonic connectivity solutions. For detailed information go to the VRF Control Systems section.

KIT-200PE1E8A // KIT-250PE1E8

Technical Focus

- High efficiency inverter system
- Cooling with low outdoor temperatures (down to -15°C)
- Maximum pipe length 100 m (more than 40% longer than other split systems)
- Multifunctional wireless remote control with built-in temperature control
- Fresh air supply for improved air quality

Features

ENERGY EFFICIENCY AND ECOLOGY
- Maximum efficiency Inverter system
- R410A environmentally friendly refrigerant gas

COMFORT
- Cooling with low outdoor temperatures (down to -15°C)
- Heating with low outdoor temperatures (down to -20°C)
- Selection of temperature sensor at indoor unit or wired remote control

EASY OF USE
- Weekly On/Off timer (6 settings per day and 42 per week)
- Selection of wired / Wireless and simplified wired remote controller

EASY INSTALLATION AND MAINTENANCE
- High static pressure units ideal for shops and offices

System example

An inspection port (450 x 450 mm or more) is required at the lower side of the indoor unit body. Distributor (field supply).

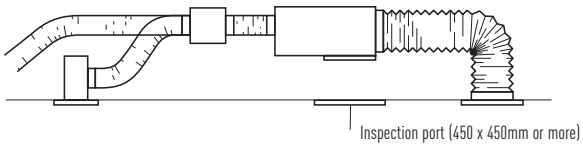

Plenums

Air Outlet Plenum (suitable for rigid + flexible duct)		
	N. of exits with diameters	Model
S-250PE1E8	1 x 500 mm	CZ-TREMIESPW706
S-200PE1E8A	1 x 450 mm	CZ-TREMIESPW705



U-200PE1E8
U-250PE1E8



PACi STANDARD

PACi ELITE

PACi Twin, Triple and Double-Twin System

With this system, a single outdoor unit can split capacity for up to 4 indoor areas simultaneously. This makes the system particularly apt for common areas. It reduces noise concentration and enables the same temperature to be reached around the room. A mix of indoor units can be installed (wall, cassette, duct, ceiling) in one system.

PACi Standard Single and Twin System from 10,0 to 12,5 kW
Up to 2 indoor units connectable on the same outdoor. Panasonic's PACi units can be installed as single and twin systems. The indoor units can be combined following the selection table. The operation will always be simultaneous. All the indoor units will work with the same settings.

PACi Elite Twin, Triple and Double-Twin System from 7,1 to 14,0 kW
Up to 4 indoor units can be connected to the same outdoor unit. Panasonic's PACi units 71, 100, 125 and 140 can be installed as twin, triple and double-twin systems. The indoor units can be combined as per the selection table. The operation will always be simultaneous. All the indoor units will work with the same settings.

Big PACi Elite Twin, Triple and Double-Twin System from 20,0 to 25,0 kW
Up to 4 indoor units can be connected to the same outdoor unit. Panasonic's PACi units 200 and 250 can be installed as twin, triple and double-twin systems. The indoor units can be combined as per the selection table. The operation will always be simultaneous. All the indoor units will work with the same settings.

Indoor unit capacities						
Capacity	Wall	4 Way 60x60 Cassette	4 Way 90x90 Cassette	Low Static Pressure Hide Away	High Static Pressure Hide Away	Celling
						
3,6 kW	S-36PK1E5A	S-36PY2E5A	S-36PU1E5A	S-36PN1E5A	S-36PF1E5A	S-36PT2E5A
4,5 kW	S-45PK1E5A	S-45PY2E5A	S-45PU1E5A	S-45PN1E5A	S-45PF1E5A	S-45PT2E5A
5,0 kW	S-50PK1E5A	S-50PY2E5A	S-50PU1E5A	S-50PN1E5A	S-50PF1E5A	S-50PT2E5A
6,0 kW	S-60PK1E5A		S-60PU1E5A	S-60PN1E5A	S-60PF1E5A	S-60PT2E5A
7,1 kW	S-71PK1E5A		S-71PU1E5A	S-71PN1E5A	S-71PF1E5A	S-71PT2E5A
10,0 kW	S-100PK1E5A		S-100PU1E5A	S-100PN1E5A	S-100PF1E5A	S-100PT2E5A
12,5 kW			S-125PU1E5A	S-125PN1E5A	S-125PF1E5A	S-125PT2E5A

Outdoor unit capacities				
Capacity	PACi Standard Single and Twin System	PACi Elite Twin, Triple and Double-Twin System from 7,1 to 14,0 kW		PACi Elite Twin, Triple and Double-Twin System from 20,0 to 25,0 kW
				
7,1 kW	U-71PEY1E5	U-71PE1E5A // U-71PE1E8A		
10,0 kW	U-100PEY1E5 // U-100PEY1E8		U-100PE1E5A // U-100PE1E8A	
12,5 kW	U-125PEY1E5 // U-125PEY1E8		U-125PE1E5A // U-125PE1E8A	
14,0 kW	U-140PEY1E8		U-140PE1E5A // U-140PE1E8A	
20,0 kW				U-200PE1E8
25,0 kW				U-250PE1E8

U-__1E5 Single Phase // U-__1E8 Three Phase

PACi Standard Single/Simultaneous operation system combinations

kW	Outdoor			
Indoor	7,1	10,0	12,5	14,0
3,6	Twin U-71 → S-36, S-36			
5,0		Twin U-100 → S-50, S-50		
6,0			Twin U-125 → S-60, S-60	
7,1	Single[1] U-71 → S-71			Twin U-140 → S-71, S-71
10,0		Single[1] U-100 → S-100		
12,5			Single[1] U-125 → S-125	
14,0				Single[1] U-140 → S-140

PACi Elite from 20,0 to 25,0 kW Single/Simultaneous operation system combinations

kW	Outdoor	
Indoor	20,0	25,0
5,0	Double-Twin U-200 → S-50, S-50, S-50, S-50	
6,0		Double-Twin U-250 → S-60, S-60, S-60, S-60
7,1	Triple U-200 → S-71, S-71, S-71	
10,0	Twin U-200 → S-100, S-100	
12,5		Twin U-250 → S-125, S-125
20,0	Single[1] U-200 → S-200	
25,0		Single[1] U-250 → S-250

1. PACi 1x1 Kit solution.

PACi Elite from 7,1 to 14,0 kW Single/Simultaneous operation system combinations

kW	Outdoor			
Indoor	7,1	10,0	12,5	14,0
3,6	Twin U-71 → S-36, S-36	Triple U-100 → S-36, S-36, S-36	Double-Twin U-125 → S-36, S-36, S-36, S-36	
4,5			Triple U-125 → S-45, S-45, S-45	
5,0		Twin U-100 → S-50, S-50		Triple U-140 → S-50, S-50, S-50
6,0			Twin U-125 → S-60, S-60	
7,1	Single[1] U-71 → S-71			Twin U-140 → S-71, S-71
10,0		Single[1] U-100 → S-100		
12,5			Single[1] U-125 → S-125	
14,0				Single[1] U-140 → S-140

1. PACi 1x1 Kit solution.

SINGLE

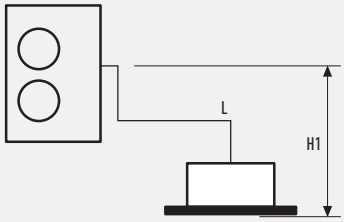

TWIN

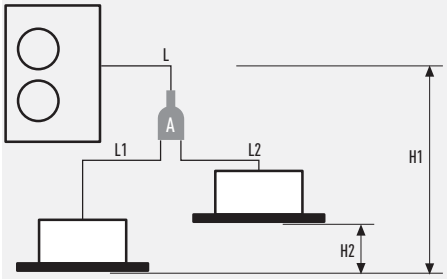

TRIPLE

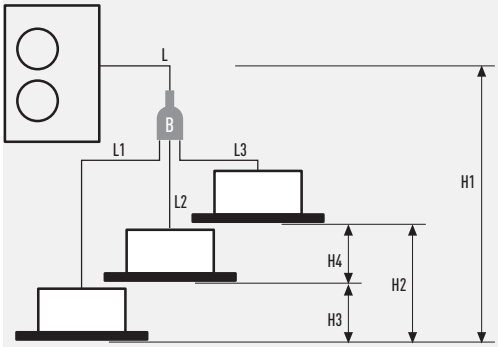

DOUBLE-TWIN

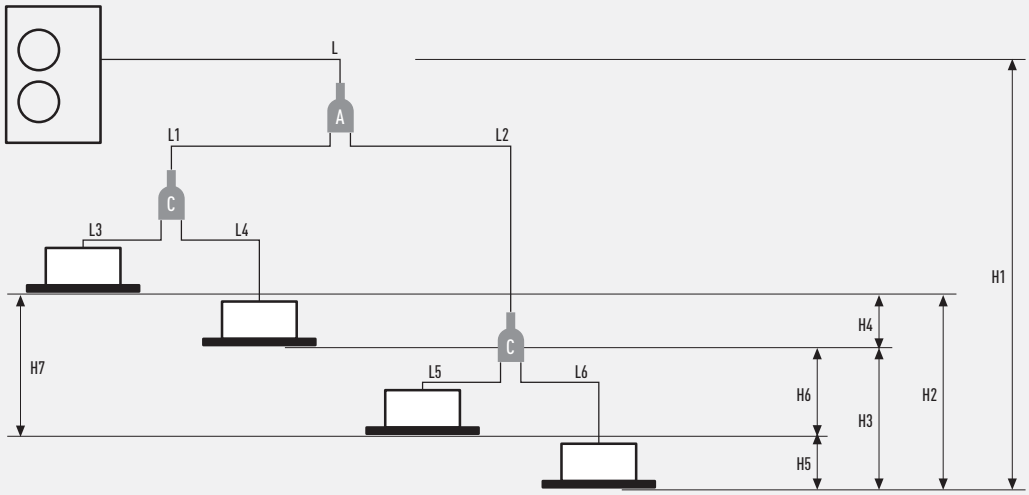

PACi Standard Twin System
Joint distribution (sold separately)
A= CZ-P155BK1

PACi Elite Twin, Triple and Double-Twin System from 7,1 to 14,0 kW
Joint distribution (sold separately)
A= CZ-P155BK1
B= CZ-P3HPC2BM
C= CZ-P155BK1

PACi Elite Twin, Triple and Double-Twin System from 20,0 to 25,0 kW
Joint distribution (sold separately)
A = CZ-P680BK2BM
B = CZ-P3HPC2BM
C = CZ-P155BK1

Twin System	PACi Standard Single and Twin System			PACi Elite Twin, Triple and Double-Twin System from 7,1 to 25 kW					
	Indoor unit combinations (see examples above)		Equivalent lengths and height differences (m) for outdoor unit sizes...	Indoor unit combinations (see examples above)				Equivalent lengths and height differences (m) for outdoor unit sizes from 7,1 to 14,0 kW	Equivalent lengths and height differences (m) for outdoor unit sizes from 20,0 to 25,0 kW
	Single	Twin		Single	Twin	Triple	Double-Twin		
Total pipe length	L	L + L1 + L2	≤ 50 m	L	L + L1 + L2	L + L1 + L2 + L3	L + L1 + L2 + L3 + L4 + L5 + L6	U-60/U-71: ≤ 50 m U-100/125/140: ≤ 75 m	≤ 100 m
Maximum pipe length from outdoor unit to most distant indoor unit	–	–	–	–	L + L1 or L + L2	L + L1 or L + L2 or L + L3	L + L1 + L3 or L + L1 + L4 or L + L2 + L5 or L + L2 + L6	–	≤ 100 m
Maximum branch pipe length	–	L1 L2	≤ 15	–	L1 or L2	L1 or L2 or L3	L1 + L3 or L1 + L4 or L2 + L5 or L2 + L6	≤ 15 m	≤ 20 m
Maximum branch pipe length differences	–	L1 > L2 L1 - L2	≤ 10	–	L1 > L2: L1 - L2	L1 > L2 > L3: L1 - L2 L2 - L3 L1 - L3	L2 + L6 (Max.) L1 + L3 (Min.): (L2 + L6) - (L1 + L3)	≤ 10 m	≤ 10 m
Maximum pipe length after frist branch (Double-Twin)	–	–	–	–	–	–	L2 > L1: L2 - L1	≤ 10 m	≤ 10 m
Maximum pipe length differences after second branch (Double-Twin)	–	–	–	–	–	–	L4 > L3: L4 - L3 L6 > L5: L6 - L5	≤ 10 m	≤ 10 m
Height difference (outdoor unit located higher)	H1	H1	≤ 30	H1	H1	H1	H1	≤ 30 m	≤ 30 m
Height difference (outdoor unit located lower)	H1	H1	≤ 15	H1	H1	H1	H1	≤ 15 m	≤ 15 m
Height difference between indoor units	–	H2	≤ 0.5	–	H2	H2 or H3 or H4	H2 or H3 or H4 or H5 or H6	≤ 0.5 m	≤ 0.5 m

Twin System	PACi Standard Single and Twin System				PACi Elite Twin, Triple and Double-Twin System from 7,1 to 14,0 kW						PACi Elite Twin, Triple and Double-Twin System from 20,0 to 25,0 kW				
	Outdoor unit main pipe diameter (L)		Indoor unit connection tube (L1, L2)		Outdoor unit main pipe diameter (L)	Indoor unit connection pipe diameter (L1, L2, L3, L4) (mm)					Outdoor unit main pipe diameter (L) (mm)		Double-Twin distribution pipe (L1, L2)[1]	Indoor unit connection pipe diameter	
Unit type capacity	100	125	50	60	71 - 140	36	45	50	60	71	200	250	100 - 125	50	60 - 125
Liquid pipe (mm)	Ø 9,52	Ø 12,7	Ø 6,35	Ø 9,52	Ø 9,52	Ø 6,35	Ø 6,35	Ø 6,35	Ø 9,52	Ø 9,52	Ø 9,52	Ø 12,7	Ø 9,52	Ø 6,35	Ø 9,52
Gas pipe (mm)	Ø 15,88	Ø 15,88	Ø 12,7	Ø 15,88	Ø 15,88	Ø 12,70	Ø 12,70	Ø 12,70	Ø 15,88	Ø 15,88	Ø 25,4	Ø 25,4	Ø 15,88	Ø 12,7	Ø 15,88
Additional charge (g/m)	50	50	20	50	50	20	20	20	50	50	40	80	40	20	40

1. Total capacity of indoor unit connected after the branch

Refrigerant charging: For the twin connection, the amount of refrigerant required for pipe length 30 m has been included in this unit at the factory while that required for pipe length 20 m has been included for the Triple / Double-Twin connections.
No additional charge is required for the first 30 m pipe length in the case of the twin connection and for the first 20 m in the case of the Triple / Double-Twin connections. The amount of included refrigerant for each model is listed on NAMA PLATE.
Make additional charges by adding up pipe length in an order of main (L branch pipe), (L1, L2, L3 wide diameter) and then selecting the amount of refrigerant corresponding to the remaining (after 30 m for the Twin connection and after 20 m for the Triple / Double-Twin connections) liquid side pipe diameter and pipe length from the below table.



Optional Controller
Wired remote controller
CZ-RTC3



Optional Controller
Timer remote controller
CZ-RTC2



Optional Controller
Wireless remote controller
Various type.



Optional Controller
Simplified remote controller
CZ-RE2C2

Compatible with all Panasonic connectivity solutions. For detailed information go to the VRF Control Systems section.

Compatible Indoor Units			3,6 kW	4,5 kW	5,0 kW	6,0 kW	7,1 kW	10,0 kW	12,5 kW
Capacity for all indoor units	Cooling	kW	3,6	4,5	5,0	6,0	7,1	10,0	12,5
	Heating	kW	4,2	5,2	5,6	7,0	8,0	11,2	14,0

Wall*			S-36PK1E5A	S-45PK1E5A	S-50PK1E5A	S-60PK1E5A	S-71PK1E5A	S-100PK1E5A
Dimensions	H x W x D	mm	300 x 1.065 x 230	300 x 1.065 x 230	300 x 1.065 x 230	300 x 1.065 x 230	300 x 1.065 x 230	300 x 1.065 x 230
Sound pressure level	Cooling (Hi / Me / Lo)	dB(A)	35 / 31 / 27	38 / 34 / 30	40 / 36 / 32	47 / 44 / 40	47 / 44 / 40	47 / 44 / 40
	Heating (Hi / Me / Lo)	dB(A)	35 / 31 / 27	38 / 34 / 30	40 / 36 / 32	47 / 44 / 40	47 / 44 / 40	47 / 44 / 40
Air volume	Cooling (Hi / Me / Lo)	m³ / h	660 / 570 / 450	720 / 630 / 510	840 / 720 / 630	1.080 / 870 / 690	1.080 / 870 / 690	1.140 / 990 / 780
	Heating (Hi / Me / Lo)	m³ / h	660 / 570 / 450	720 / 630 / 510	840 / 720 / 630	1.080 / 870 / 690	1.080 / 870 / 690	1.140 / 990 / 780

4 Way 60x60 Cassette**			S-36PY2E5A	S-45PY2E5A	S-50PY2E5A
Panel			CZ-KPY3A	CZ-KPY3A	CZ-KPY3A
Dimensions	Indoor H x W x D	mm	283 x 575 x 575	283 x 575 x 575	283 x 575 x 575
	Panel H x W x D	mm	30 x 625 x 625	30 x 625 x 625	30 x 625 x 625
Sound pressure level	Cooling (Hi / Me / Lo)	dB(A)	32 / 29 / 26	36 / 32 / 28	41 / 37 / 33
	Heating (Hi / Me / Lo)	dB(A)	32 / 29 / 26	36 / 32 / 28	41 / 37 / 33
Air volume	Cooling / Heating	m³ / h	540 / 540	636 / 636	750 / 750

4 Way 90x90 Cassette***			S-36PU1E5A	S-45PU1E5A	S-50PU1E5A	S-60PU1E5A	S-71PU1E5A	S-100PU1E5A	S-125PU1E5A
Panel			CZ-KPU21	CZ-KPU21	CZ-KPU21	CZ-KPU21	CZ-KPU21	CZ-KPU21	CZ-KPU21
Dimensions	Indoor H x W x D	mm	256 x 840 x 840	256 x 840 x 840	256 x 840 x 840	256 x 840 x 840	256 x 840 x 840	319 x 840 x 840	319 x 840 x 840
	Panel H x W x D	mm	33,5 x 950 x 950	33,5 x 950 x 950	33,5 x 950 x 950	33,5 x 950 x 950	33,5 x 950 x 950	33,5 x 950 x 950	33,5 x 950 x 950
Sound pressure level	Cooling (Hi / Me / Lo)	dB(A)	30 / 28 / 27	31 / 28 / 27	32 / 29 / 27	36 / 31 / 28	37 / 31 / 28	44 / 38 / 32	45 / 39 / 33
	Heating (Hi / Me / Lo)	dB(A)	30 / 28 / 27	31 / 28 / 27	32 / 29 / 27	36 / 31 / 28	37 / 31 / 28	44 / 38 / 32	45 / 39 / 33
Air volume	Cooling (Hi / Me / Lo)	m³ / h	840 / 780 / 720	900 / 780 / 720	960 / 810 / 720	1.260 / 1.020 / 840	1.320 / 1.020 / 840	1.980 / 1.620 / 1.260	2.100 / 1.680 / 1.320
	Heating (Hi / Me / Lo)	m³ / h	840 / 780 / 720	900 / 780 / 720	960 / 810 / 720	1.260 / 1.020 / 840	1.320 / 1.020 / 840	1.980 / 1.620 / 1.260	2.100 / 1.680 / 1.320

Low Static Pressure Hide Away***			S-36PN1E5A	S-45PN1E5A	S-50PN1E5A	S-60PN1E5A	S-71PN1E5A	S-100PN1E5A	S-125PN1E5A
Dimensions	H x W x D	mm	250 x 780(+100) x 650	250 x 780(+100) x 650	250 x 780(+100) x 650	250 x 1.000(+100) x 650	250 x 1.000(+100) x 650	250 x 1.200(+100) x 650	250 x 1.200(+100) x 650
Sound pressure level	Cooling (Hi / Me / Lo)	dB(A)	40 / 38 / 35	41 / 39 / 35	41 / 39 / 35	43 / 41 / 36	43 / 41 / 36	44 / 42 / 37	46 / 44 / 39
	Heating (Hi / Me / Lo)	dB(A)	40 / 38 / 35	41 / 39 / 35	41 / 39 / 35	43 / 41 / 36	43 / 41 / 36	44 / 42 / 37	46 / 44 / 39
External static pressure	High / Medium / Low	Pa	80 / 50 / 10	80 / 50 / 10	80 / 50 / 10	80 / 50 / 10	80 / 50 / 10	80 / 50 / 10	80 / 50 / 10
Air volume	Cooling / Heating	m³ / h	840 / 840	960 / 960	960 / 960	1.320 / 1.320	1.320 / 1.320	2.160 / 2.160	2.400 / 2.400

Hide Away High Static Pressure***			S-36PF1E5A	S-45PF1E5A	S-50PF1E5A	S-60PF1E5A	S-71PF1E5A	S-100PF1E5A	S-125PF1E5A
Dimensions	H x W x D	mm	290 x 800 x 700	290 x 800 x 700	290 x 800 x 700	290 x 1.000 x 700	290 x 1.000 x 700	290 x 1.400 x 700	290 x 1.400 x 700
Sound pressure level	Cooling (Hi / Me / Lo)	dB(A)	33 / 29 / 25	34 / 30 / 26	34 / 30 / 26	35 / 32 / 26	35 / 32 / 26	38 / 34 / 31	39 / 35 / 32
	Heating (Hi / Me / Lo)	dB(A)	33 / 29 / 25	34 / 30 / 26	34 / 30 / 26	35 / 32 / 26	35 / 32 / 26	38 / 34 / 31	39 / 35 / 32
External static pressure	High / Medium / Low	Pa	150 / 70 / 10	150 / 70 / 10	150 / 70 / 10	150 / 70 / 10	150 / 70 / 10	150 / 100 / 10	150 / 100 / 10
Air volume	Cooling (Hi / Me / Lo)	m³ / h	840 / 780 / 600	840 / 780 / 600	960 / 900 / 720	1.260 / 1.140 / 900	1.260 / 1.140 / 900	1.920 / 1.560 / 1.260	2.040 / 1.740 / 1.380
	Heating (Hi / Me / Lo)	m³ / h	840 / 780 / 600	840 / 780 / 600	960 / 900 / 720	1.260 / 1.140 / 900	1.260 / 1.140 / 900	1.920 / 1.560 / 1.260	2.040 / 1.740 / 1.380

Ceiling***			S-36PT2E5A	S-45PT2E5A	S-50PT2E5A	S-60PT2E5A	S-71PT2E5A	S-100PT2E5A	S-125PT2E5A
Dimensions	H x W x D	mm	210 x 910 x 680	210 x 910 x 680	235 x 960 x 690	235 x 1.275 x 690	235 x 1.275 x 690	235 x 1.590 x 690	230 x 1.590 x 690
Sound pressure level	Cooling (Hi / Me / Lo)	dB(A)	35 / 32 / 30	38 / 33 / 30	38 / 33 / 30	39 / 36 / 33	39 / 36 / 33	42 / 38 / 35	45 / 40 / 37
	Heating (Hi / Me / Lo)	dB(A)	36 / 32 / 30	39 / 34 / 30	39 / 34 / 30	40 / 36 / 33	40 / 36 / 33	42 / 38 / 35	46 / 41 / 38
Air volume	Cooling (Hi / Me / Lo)	m³ / h	840 / 720 / 630	900 / 750 / 630	900 / 750 / 630	1.200 / 1.020 / 870	1.260 / 1.080 / 930	1.800 / 1.500 / 1.380	2.040 / 1.680 / 1.440
	Heating (Hi / Me / Lo)	m³ / h	840 / 720 / 630	900 / 750 / 630	900 / 750 / 630	1.200 / 1.020 / 870	1.260 / 1.080 / 930	1.800 / 1.500 / 1.380	2.040 / 1.680 / 1.440

* Available from June 2014. ** Available from November 2014. *** Available from May 2014.

Compatible Outdoor Units			7,1 kW	10,0 kW	12,5 kW	14,0 kW	7,1 kW	10,0 kW	12,5 kW	14,0 kW	20,0 kW	25,0 kW
Outdoor Single Phase			U-71PEY1E5	U-100PEY1E5	U-125PEY1E5	—	U-71PE1E5A	U-100PE1E5A	U-125PE1E5A	U-140PE1E5A		
Outdoor Three Phase			—	U-100PEY1E8	U-125PEY1E8	U-140PEY1E8	U-71PE1E8A	U-100PE1E8A	U-125PE1E8A	U-140PE1E8A	U-200PE1E8	U-250PE1E8
Cooling capacity	Nominal (Min - Max)	kW	7,1 (2,0 - 7,7)	10,0 (2,7 - 11,5)	12,5 (3,8 - 13,5)	14,0 (3,3 - 15,5)	7,1 (2,5 - 8,0)	10,0 (3,3 - 12,5)	12,5 (3,3 - 14,0)	14,0 (3,3 - 15,5)	20,0 (6,0 - 22,4)	25,0 (6,0 - 28,0)
Heating capacity	Nominal (Min - Max)	kW	7,1 (1,8 - 8,1)	10,0 (2,1 - 13,8)	12,5 (3,4 - 15,0)	14,0 (4,1 - 16,0)	8,0 (2,0 - 9,0)	11,2 (4,1 - 14,0)	14,0 (4,1 - 16,0)	16,0 (4,1 - 18,0)	21,8 (6,0 - 22,4)	28,0 (6,0 - 31,5)
Power source	Single Phase	V	220 / 230 / 240	220 / 230 / 240	220 / 230 / 240	—	220 / 240	220 / 240	220 / 240	220 / 240		
	Three Phase	V	—	380 / 400 / 415	380 / 400 / 415	380 / 415	380 / 415	380 / 415	380 / 415	380 / 415	380 / 415	380 / 415
Connection		mm²	2,50	4,00	6,00	2,50	2 x 1,5 or 2,5	2 x 1,5 or 2,5	2 x 1,5 or 2,5	2 x 1,5 or 2,5	—	—
Air volume	Cooling / Heating	m³/h	2.340	4.560 / 4.020	4.800 / 4.380	8.100 / 7.200	3.600 / 3.600	6.600 / 5.700	7.800 / 6.600	8.100 / 7.200	7740	7080
Sound pressure level	Cooling / Heating (Hi)	dB(A)	50 / 52	54 / 54	56 / 56	54 / 53	48 / 50	52 / 52	53 / 53	54 / 55	57 / 57	57 / 58
Sound power level	Cooling / Heating (Hi)	dB	70 / 70	70 / 70	73 / 73	71 / 70	65 / 67	69 / 69	70 / 70	71 / 71	72	73
Dimensions	H x W x D	mm	569x790x285	996x940x340	996x940x340	1.416x940x340	996x940x340	1.416x940x340	1.416x940x340	1.416x940x340	1526x940x340	1526x940x340
Net weight		kg	42	73	85	98	69	98	98	98	118	128
Piping connections	Liquid pipe	Inch (mm)	3/8 (9,52)	3/8 (9,52)	3/8 (9,52)	3/8 (9,52)	3/8 (9,52)	3/8 (9,52)	3/8 (9,52)	3/8 (9,52)	9,52 (3/8)	12,7 (1/2)
	Gas pipe	Inch (mm)	5/8 (15,88)	5/8 (15,88)	5/8 (15,88)	5/8 (15,88)	5/8 (15,88)	5/8 (15,88)	5/8 (15,88)	5/8 (15,88)	25,4 (1)	25,4 (1)
Refrigerant Loading	R410A	kg	1,7	2,60	3,20	3,4	2,35	3,4	3,4	3,4	5,3	6,5
Elevation difference (in/out)	Max	m	30	30	30	30	30	30	30	30	30	30
Piping length	Min / Max	m	5 / 50	5 / 50	5 / 50	5 / 50	5 / 50	5 / 75	5 / 75	5 / 75	5 / 100	5 / 100
Operating range	Cooling Min / Max	°C	-10 / +43	-10 / +43	-10 / +43	-10 / +43	-15 / +46	-15 / +46	-15 / +46	-15 / +46	-15 / +43	-15 / +43
	Heating Min / Max	°C	-15 / +24	-15 / +24	-15 / +24	-15 / +24	-20 / +24	-20 / +24	-20 / +24	-20 / +24	-20 / +15	-20 / +15

ELECTRIC AIR CURTAIN

Air curtains can help reduce whole building heating or cooling costs by helping to stop heat escaping the building or keeping cooled air in. Panasonic offers two sizes - 900mm and 1200mm electric air curtains. Ideal for separating areas and energy saving.

			FY-10ESPNAH	FY-10ELPNAH
Width			900	1.200
Watts	Hi	W	71,5	96
	Lo	W	61,5	74
Current	Hi	A	0,40	0,54
	Lo	A	0,29	0,35
Air speed	Hi	m/s	13,0	13,1
	Lo	m/s	11,1	11,0
Air volume	Hi	m³/h	750	1.000
	Lo	m³/h	630	830
Noise lever	Hi	dB(A)	46	46
	Lo	dB(A)	42	41
Weight		kg	11	14

INDOOR UNIT DIMENSIONS FY-10ESPNAH

FRONT VIEW

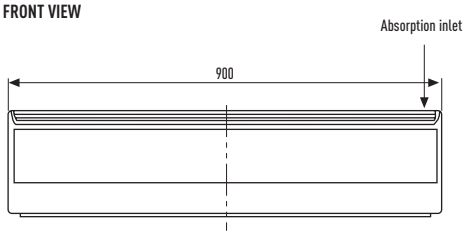

BACK VIEW

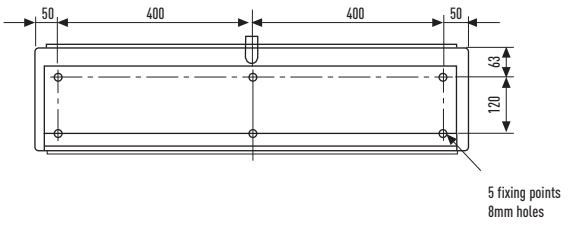

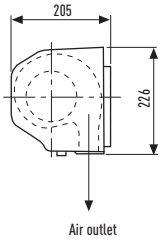

INDOOR UNIT DIMENSIONS FY-10ELPNAH

FRONT VIEW

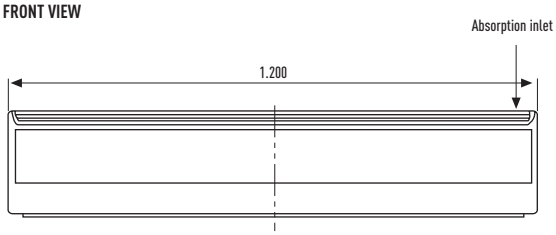

BACK VIEW

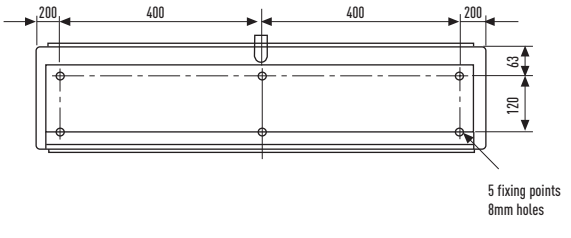

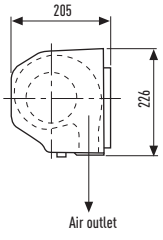



FY-10ESPNAH // FY-10ELPNAH

Technical Focus

- 2 sizes: 900 mm and 1.200 mm
- Powerful air flow (10 m/s)
- Very low noise, only 42 dB

Features

COMFORT
- Easy redirection of airflow by means of the manual deflector

EASE OF USE
- Speed selector (high and low) on the unit itself

EASY INSTALLATION AND MAINTENANCE
- Simple installation
- Compact dimensions improve installation and positioning in any space

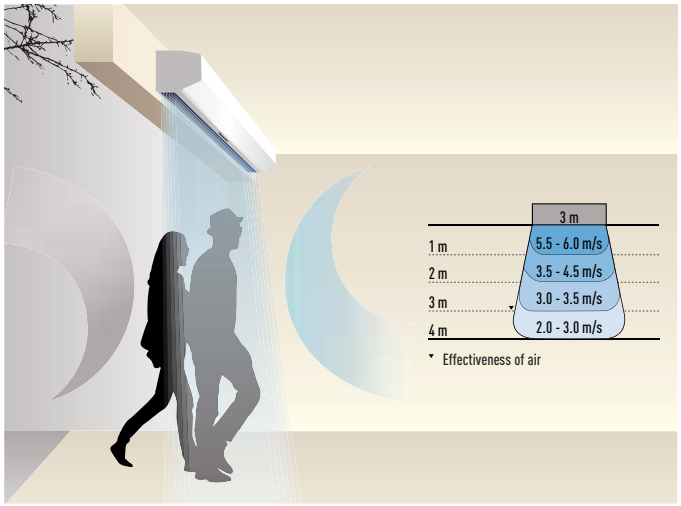





Air Curtain with DX Coil, connected to the PACi or VRF Systems

The Panasonic range of air curtains is designed for smooth operation and efficient performance. Air curtains produce a continuous stream of air blown from the top to the bottom of an open doorway and create a barrier that people and products can flow across, but air can't. Designed to improve energy efficiency, minimise heat loss from a building, and to allow retailers to keep doors open to encourage customers, our Air Curtains are suitable for connection to both PACi and VRF Systems.

- Super-efficient with new EC fan motor (40% lower running costs compared to a standard AC fan motor)
- Easy Cleaning and Servicing
- Can be connected to either Panasonic PACi or VRF systems
- Built-in drain for cooling operation
- Standard and Jet Flow air curtains can be controlled via Panasonic's range of remote internet controls

The new standard and jet-flow models are ideal for connection to a PACi or ECOi system. With simple 'plug and play' installation, both are fitted with an EC fan motor for a smooth operation and efficient performance. This new fan guarantees 40% lower running cost than with a standard AC fan motor. With air curtains often running for 12 hours a day as a minimum, this can lead to considerable savings.

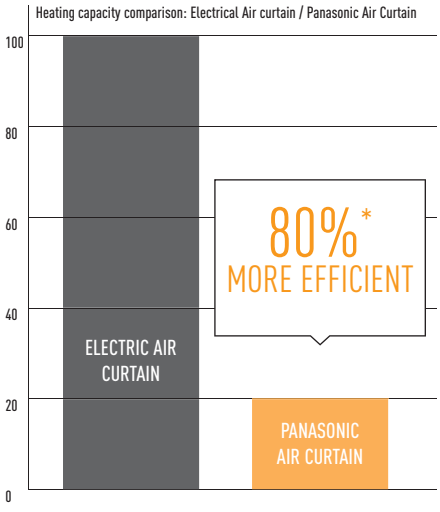

* With the U-100PE1E5 on the PAW-20PAIRC-MS.
Calculation method: Taking as consideration SCOP of the Panasonic combination of 6.0. If 100 is the energy needed for a air curtain, Panasonic Air curtain will need 1/(1-6)*100=20.

Highly efficient heating effect

The combined air stream, which has a desirable low air current induction factor (mixing factor), can carry the selected initial temperature effect over long distances, and will reach the floor area while still at room temperature. This is necessary to avoid cooling down the interior spaces.
Available in different lengths to suit requirements between 1 and 2,5m, both air curtains have outlet grilles that can be adjusted to five different positions. The jet flow model can be installed up to a height of 3,5m with the standard model up to 3,0m. The outlet grilles can be easily adjusted into five positions to suit different installations requirements and the air filter can be accessed without the need for specialist tools.

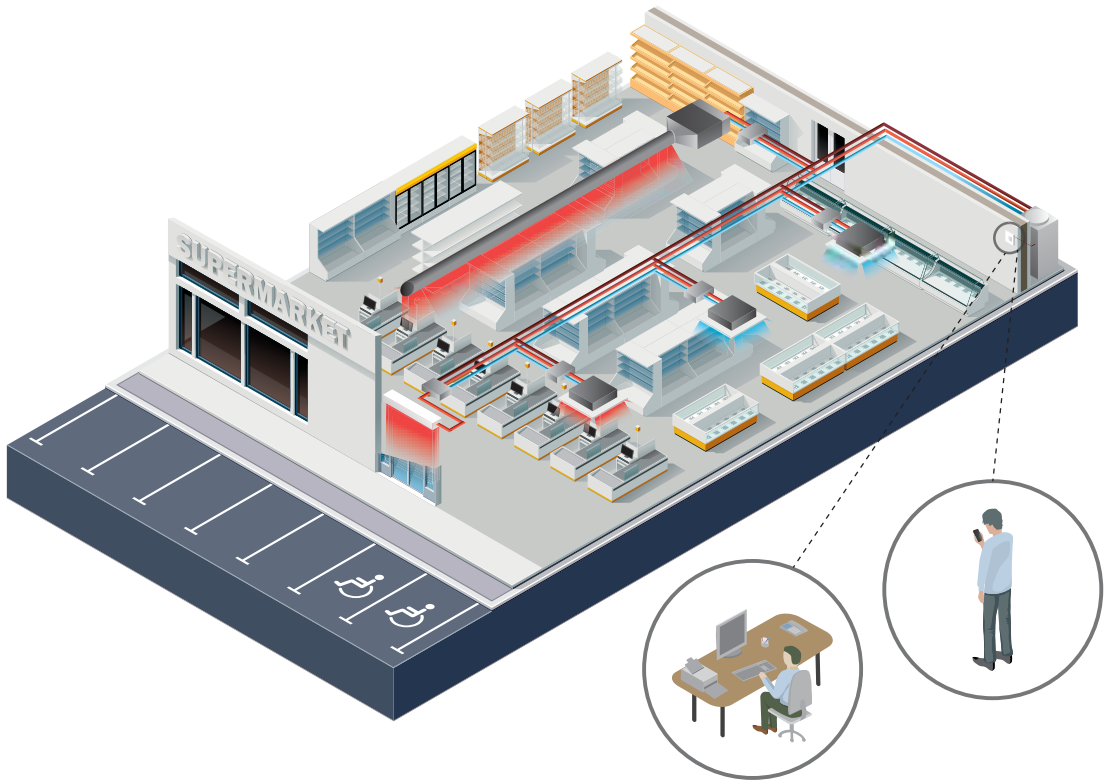

Intelligent Operation

Our air curtains combine air flow and heating / cooling technology to ensure optimum comfort and energy efficiency whilst also creating an effective barrier between indoor and outdoor environments. Design and installation is key to achieving the correct height / temperature settings to achieve optimum performance. Our air curtains are designed to answer the demands of the retail, commercial and industrial markets.

Internet Control

An app added to your tablet or smartphone or via the Internet allows you to control and manage the system remotely. There is also the option to integrate into existing BMS systems by using other Panasonic interfaces.

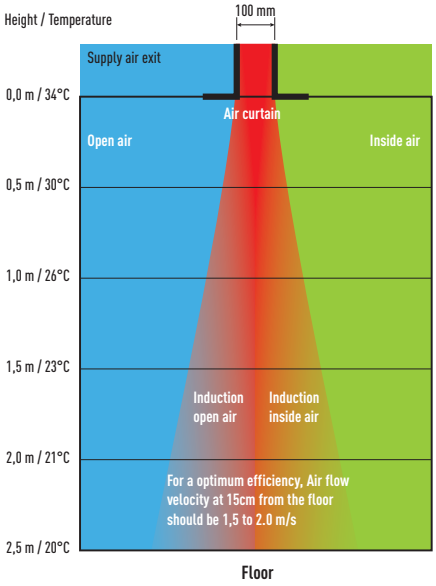

How does it work?

Stale air from the room is taken in and ejected near the door. This creates a 'roll of air' that shields the door area, mixing with the colder incoming air. It then turns away from the door, back into the room and toward the intake screen, where it is partly drawn in again. This flow of air helps to create a barrier for heat loss yet at the same time refreshes room air.

Optimised air flow velocity

1. Energy losses, no air curtain installed
2. Too low velocity air curtain – Air Curtain not efficient
3. Optimum results with the Tekadoor Air Curtain connected to Panasonic PACi
4. Too high velocity air curtain – considerable turbulence, energy lost to the outside, Air Curtain not efficient

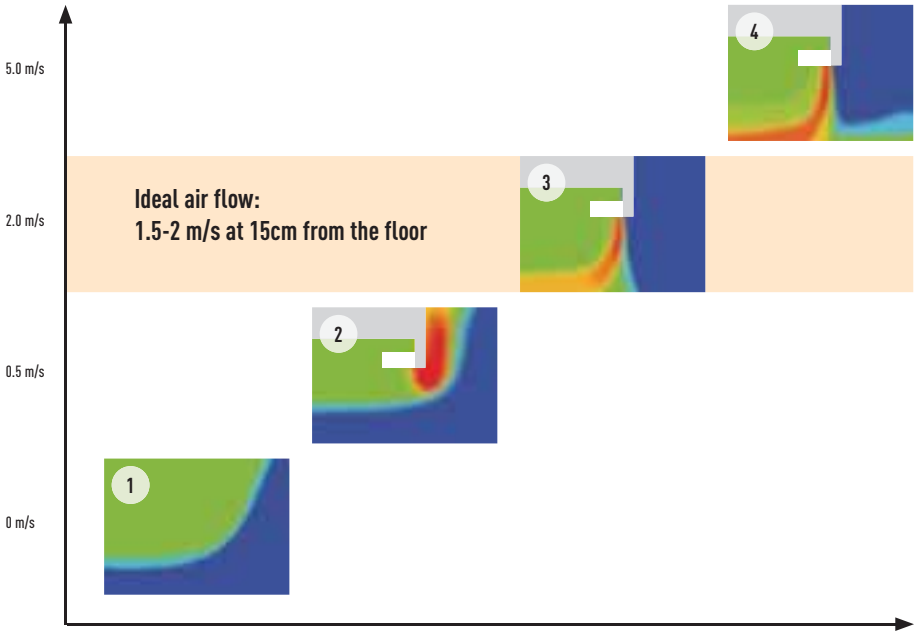

AIR CURTAIN WITH DX COIL

High efficiency Air curtain connected to your PACi installation on 1x1 connection!

Plug & Play Installation
EC Fan motor for a smooth operation and efficient performance.
2 types of Air flow available: Jet-Flow and Standard.
2015 Fan Standard available today.
Easy Cleaning and Servicing.

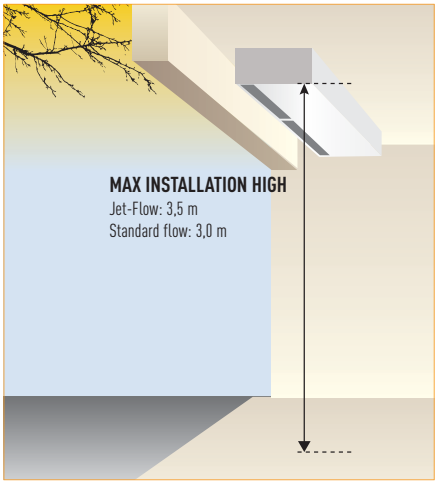

Easy control by BMS
CONNECTIVITY

HP			4 HP	8 HP	10 HP	4 HP	10 HP
Air Curtain			PAW-10PAIRC-MJ	PAW-15PAIRC-MJ	PAW-20PAIRC-MJ	PAW-10PAIRC-MS	PAW-20PAIRC-MS
Air flow type			Jet-flow			Standard	
Air Flow Length (A)		m	1,0	1,5	2,0	1,0	2,0
Air volume	High	m²/h	1.800	2.700	3.600	1.800	2.700
	Medium	m²/h	1.500	2.300	3.000	1.500	2.300
	Low	m²/h	1.200	1.900	2.500	1.200	1.900
Cooling capacity nominal[1]		kW	9,2	17,5	23,1	9,2	17,5
Heating capacity with air in 20°C, air out 40°C		kW	11,9	17,9	23,9	11,9	17,9
Heating capacity with air in 20°C, air out 35°C		kW	8,9	13,4	17,9	8,9	13,4
Heating capacity with air in 20°C, air out 30°C		kW	5,9	8,9	11,9	5,9	8,9
Max installation height	Good condition	m	3,5	3,5	3,5	3,0	3,0
	Normal condition	m	3,1	3,1	3,1	2,7	2,7
	Bad condition	m	2,7	2,7	2,7	2,4	2,4
Refrigerant			R410A	R410A	R410A	R410A	R410A
Liquid pipe		Inch (mm)	3/8 (9,52)	3/8 (9,52)	3/8 (9,52)	3/8 (9,52)	3/8 (9,52)
Gas pipe		Inch (mm)	5/8 (15,88)	3/4 (19,05)	7/8 (22,22)	5/8 (15,88)	7/8 (22,22)
Fan			230V / 50Hz / 1 / N / PE	230V / 50Hz / 1 / N / PE	230V / 50Hz / 1 / N / PE	230V / 50Hz / 1 / N / PE	230V / 50Hz / 1 / N / PE
Fan type			EC	EC	EC	EC	EC
Currency	High	A	2,1	2,8	4,2	2,1	4,2
	Med	A	0,8	1,1	1,6	0,8	1,6
	Low	A	0,3	0,4	0,6	0,3	0,6
Electrical Consumption	High	kW	0,44	0,59	0,89	0,44	0,89
	Med	kW	0,17	0,23	0,34	0,17	0,34
	Low	kW	0,06	0,08	0,12	0,06	0,12
Protecting Fuse		A	M16A	M16A	M16A	M16A	M16A
Noise		dB(A)	40-55	40-56	40-57	40-55	40-57
Dimensions	W x H x D	mm	1.210 x 260 x 590	1.710 x 260 x 590	2.210 x 260 x 590	1.210 x 260 x 490	2.210 x 260 x 490
Weight		kg	70	100	138	60	128

Outdoor combination with PACi Elite unit 40°C	U-100PE1E5/8	U-140PE1E5/8	U-200PE1E8	U-100PE1E5/8	U-140PE1E5/8
Outdoor combination with PACi Standard unit 40°C	U-100PEY1E5/8	—	—	U-100PEY1E5/8	—
Outdoor combination with PACi Elite unit 35°C	U-71PE1E5/8	U-100PE1E5/8	U-140PE1E5/8	U-71PE1E5/8	U-100PE1E5/8
Outdoor combination with PACi Standard unit 35°C	U-100PEY1E5/8	U-100PEY1E5/8	—	U-100PEY1E5/8	U-100PEY1E5/8
Outdoor combination with PACi Elite unit 30°C	U-50PE1E5	U-100PE1E5/8	U-100PE1E5/8	U-50PE1E5	U-100PE1E5/8
Outdoor combination with PACi Standard unit 30°C	U-60PEY1E5	U-100PEY1E5/8	U-100PEY1E5/8	U-60PEY1E5	U-100PEY1E5/8

All combinations under rated conditions: Heating Outdoor +7°C DB/+6°C WB Indoor +20°C DB. In case of lower outdoor temperatures a higher capacity outdoor unit model may be necessary .
1) Rated Conditions Cooling Outdoor +35°C DB Indoor +27°C DB/+19°C WB, Discharge temperature ³ 16°C.

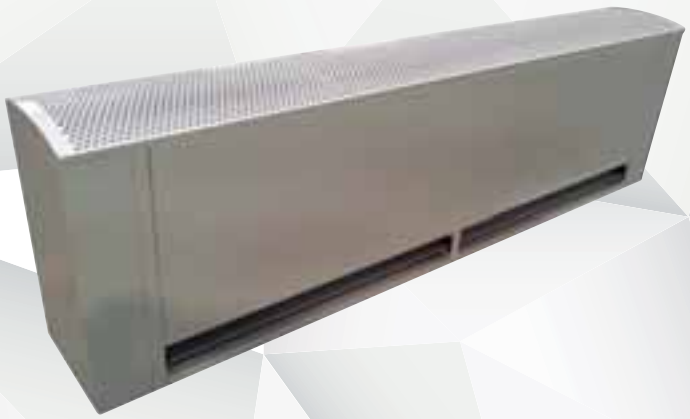

JET-FLOW: PAW-10PAIRC-MJ // PAW-15PAIRC-MJ // PAW-20PAIRC-MJ

STANDARD: PAW-10PAIRC-MS // PAW-20PAIRC-MS

Technical focus

- Save up to 40% Energy Costs by use of the integrated EC Fan Technology (Higher efficiency than conventional AC fan, softstart and longer motor duration)
- 3 Lengths of Air Curtains Jet-Flow, from 1 to 2 m and 2 lengths of Air Curtains Standard, 1 and 2 m
- Installation Height up to 3,5 m (Jet-Flow) and 3,0 m (Standard)
- Outlet Grilles can be adjusted in five positions, to suite different Indoor and installation requirements (Jet-Flow)
- Control with Panasonic Remote Control systems (optional)
- Direct integration to BMS by optional Panasonic Interfaces
- Drain included for cooling operation
- Drain pump and float switch available for forced drainage

Features

COMFORT
- Easy redirection of Air-Flow by means of manual deflector (Jet-Flow)

EASE OF USE
- Speed selectable on remote controller with 3 speeds

EASY INSTALLATION AND MAINTENANCE
- Easy installation
- Compact dimensions improve installation and positinioning (Jet-Flow)
- Easy cleaning of grid without opening of the unit
- Continuos operation even in case of 1 fan motor failure without stopping air curtain function or stopping the complete system
- Warning indication on remote controller display

JET-FLOW DIMENSIONS

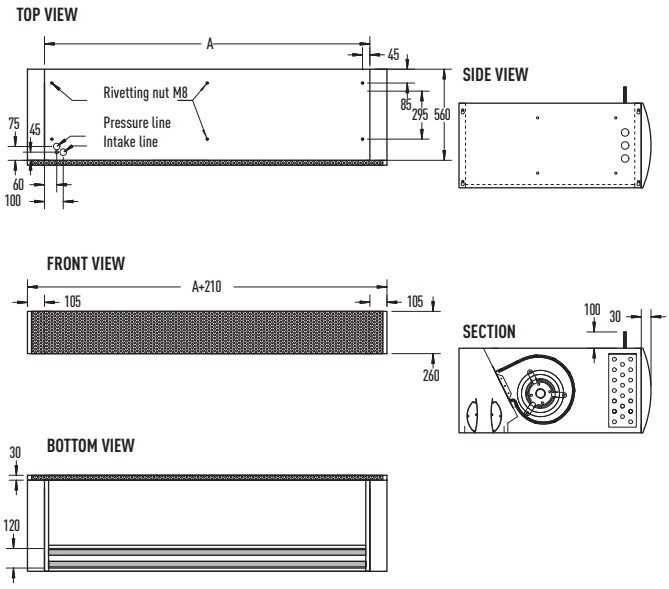

	PAW-10PAIRC-MJ	PAW-15PAIRC-MJ	PAW-20PAIRC-MJ	PAW-25EAIRC-MJ
A	1,000	1,500	2,000	2,500

STANDARD DIMENSIONS

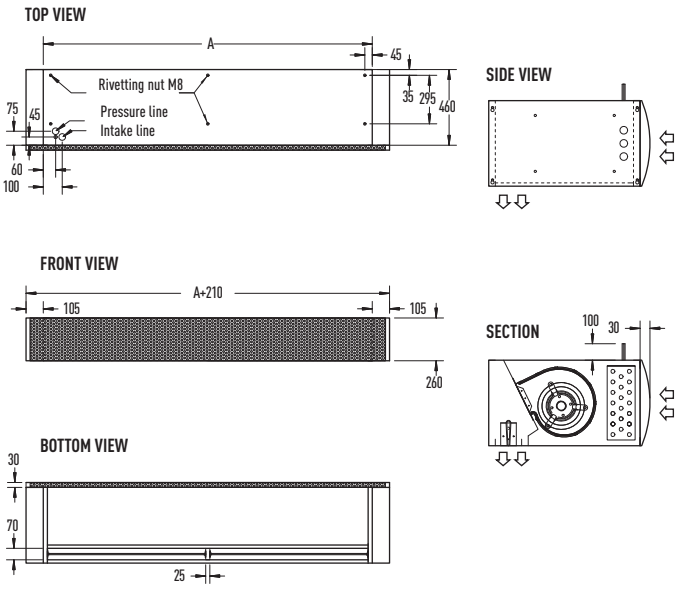

	PAW-10PAIRC-MS	PAW-20PAIRC-MS
A	1,000	2,000





Air Handling Unit Kit 10-25 kW for PACi

New AHU Kit connects PACi outdoor units to Air Handling Units system
The Panasonic AHU Kits offer a wealth of connectivity possibilities so can be easily integrated into many systems.
Application: Hotels, offices, server rooms or all large buildings where air quality control such as humidity control and fresh air and is needed.

AHU Connection Kit



PCB, Power trans, Terminal block



Thermistor x2 (Refrigerant: E1, E2)



Thermistor (Air: TA; 1 sensor)

Remote controller



Standard wired remote controller (optional).
Can be installed inside the box.

Panasonic AHU Kit, 10-25 kW connected to PACi outdoor unit

The new Air Handling Unit Kit has been developed to better meet customer demand:
- IP 65 Box in order to be installed outside
- 0-10V demand control (included on the CZ-CABP2 PCB)*
- Easy control by BMS

* Only available with Elite PACi, up to from 6kW to 14kW.

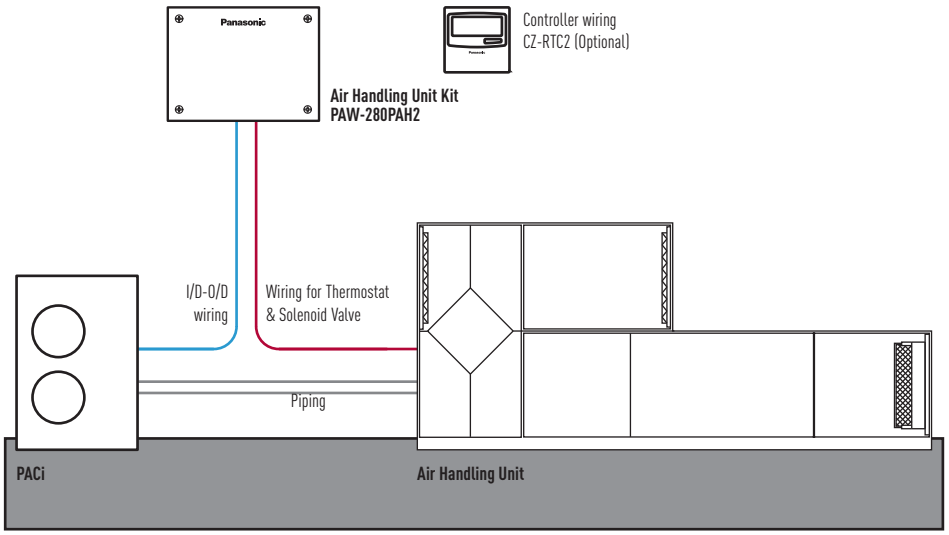

0-10 v control

With the 0-10 v demand control the capacity of the outdoor unit can be controlled by 20 steps

Analog input (V)	Demand (%)
0 (not connect)	Free
0,5	Stop
1,0	40
1,5	45
2,0	50
2,5	55
3,0	60
3,5	65
4,0	70
4,5	75
5,0	80
5,5	85
6,0	90
6,5	95
7,0	100
7,5	105
8,0	110
8,5	115
9,0	120
9,5	Free
10,0	0 (TH. OFF)

Optional parts: Following functions are available by using different control accessories

CZ-RTC2 Timer remote controller

- Operation-ON/OFF
- Mode select
- Temperature setting

* Fan operation signal can be taken from the PCB.

CZ-T10 terminal

- Input signal= Operation ON/OFF
- Remote controller prohibition
- Output signal= Operating-ON status
- Alarm output (by DC12 V)

PAW-OCT, DC12 V outlet. OPTION terminal

- Output signal= Cooling / Heating/Fan status
- Defrost
- Thermostat-ON

PAW-T10, PCB to connect to T10 connector

- A Dry contact PCB has been developed to easily control the unit
- Input signal operation ON/OFF
- Remote control prohibition
- Output signal operation ON status maximum 230 V 5 A (NO/NC)
- Output signal alarm status maximum 230 V 5 A (NO/NC)
- **Additional available contacts:**
  - External humidifier control (ON/OFF) 230 VAC 3 A
  - External fan control (ON/OFF) 12V DC
  - External filter status signal potential free
  - External float switch signal potential free
  - External leakage detection sensor or TH. OFF contact potential free (possible usage for external blow out temperature control)

Combination table for PACi single outdoor unit				
Combination shown in below table is available for PACi single system				
Power	**Size**	**PACi Standard**	**PACi Elite**	**AHU kit**
Single Phase	5,0 kW	U-50PEY1E5		PAW-280PAH2 (Common use for all outdoor units. Only 1 by 1 connection is allowed.)
	6,0 kW	U-60PEY1E5		
	7,1 kW	U-71PEY1E5		
	10,0 kW		U-100PE1E5A	
	12,5 kW		U-125PE1E5A	
	14,0 kW		U-140PE1E5A	
Three Phase	10,0 kW		U-100PE1E8A	
	12,5 kW		U-125PE1E8A	
	14,0 kW		U-140PE1E8A	
	20,0 kW		U-200PE1E8	
	25,0 kW		U-250PE1E8	

* Additional notice/instruction for system design, installation work will be defined for PAC-i connection.



Operation System	**Individual Control Systems**						
Requirements	Control for hotel application		Wired remote controller		Wireless remote controller	Quick and easy operation	
External appearance	 NEW			 NEW			
Type, model name	Intelligent Controller		Normal operation	Design wired remote controller	Wireless remote controller	Simplified remote controller	Backlit remote controller
	PAW-RE2C3-WH PAW-RE2C3-GR PAW-RE2C3-MOD-WH PAW-RE2C3-MOD-GR PAW-RE2C3-LON-WH PAW-RE2C3-LON-GR	Stand-Alone White Stand-Alone Grey Modbus White Modbus Grey LonWorks White LonWorks Grey	CZ-RTC2	CZ-RTC3 ECONAVI	CZ-RWSU2 // CZ-RWSY2 // CZ-RWSL2 // CZ-RWSC3 // CZ-RWST2 // CZ-RWST3 // CZ-RWSK2	CZ-RE2C2	CZ-RELC2
Econavi Control	–		–	✔	–	–	
Power consumption monitor	–		–	✔[2]	–	–	
Built-in Thermostat	✔		✔	✔	✔	✔	
I_O which can be controlled	1 indoor unit		1 group, 8 units	1 group, 8 units	1 group, 8 units	1 group, 8 units	
Use limitations	–		· Up to 2 controllers can be connected per group	· Up to 2 controllers can be connected per group	· Up to 2 controllers can be connected per group	· CZ-RE2C2: up to 2 controllers can be connected per group · CZ-RELC2: can not operate other (SUB) remo-con	
Function ON/OFF	✔		✔	✔	✔	✔	
Mode setting	AUTO		✔	✔	✔	✔	
Fan speed setting	✔		✔	✔	✔	✔	
Temperature setting	✔		✔	✔	✔	✔	
Air flow direction	–		✔	✔	✔[1]	✔[1]	
Permit/Prohibit switching	✔		–	–	–	–	
Weekly program	–		✔	✔	–	–	

1. Setting is not possible when a remote control unit is present (use the remote control for setting). 2) Only for PACi Elite except 50 type. * All specifications subject to change without notice.

Control systems for PACi, ECOi and ECO G

A wide variety of control options to meet the requirements of different applications.

For detailed information go to the VRF Control Systems section.

	Timer Operation	Centralized Control Systems				
	Daily and weekly program	Operation with various function from center station	Only ON/OFF operation from center station	Simplified load distribution ratio (LDR) for each tenant	BMS System. PC Base	Connection with 3rd Party Controller
					**P-AIMS. Basic Software** 	**Seri-Para I/O unit for outdoor unit** CZ-CAPDC2 
	Schedule timer	System controller	ON/OFF Controller	Intelligent Controller (Touch screen panel)	CZ-CSWKC2 **Optional software**	
	CZ-ESWC2	CZ-64ESMC2	CZ-ANC2	CZ-256ESMC2 (CZ-CFUNC2)	 CZ-CSWAC2 for Load distribution. CZ-CSWWC2 for Web application. CZ-CSWGC2 for Object layout display. CZ-CSWBC2 for BAC net software interface. *PC required (field supply)	**Local adaptor for ON/OFF control** CZ-CAPC2 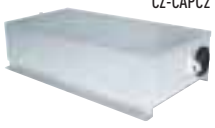
	—	—	—	—		**MINI Seri-Para I/O Unit** CZ-CAPBC2 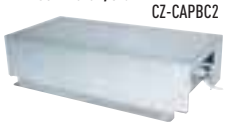
	—	—	—	—		
	—	—	—	—		
	64 groups, maximum 64 units	64 groups, maximum 64 units	16 groups, maximum 64 units	64 units x 4 systems, max. 256 units		
	· Required power supply from the system controller · When there is no system controller, connection is possible to the T10 terminal of an indoor unit	· Up to 10 controllers, can be connected to one system · Main unit/sub unit (1 main unit + 1 sub unit) connection is possible · Use without remote controller is possible	· Up to 8 controllers (4 main units + 4 sub units) can be connected to one system · Use without remote controller is impossible	· A communication adaptor (CZ-CFUNC2) must be installed for three or more systems	**Web Interface Systems**  CZ-CWEBC2 *PC required (field supply)	**Communication Adaptor** CZ-CFUNC2 
	—	✔	✔	✔		
	—	✔	—	✔		
	—	✔	—	✔		
	—	✔	—	✔		
	—	✔[1]	—	✔[1]		
	—	✔	✔	✔		
	✔	—	—	✔		

Internet Control. Control your air conditioning system with your smart device -smartphone & internet for PACi



Reference PA-RC2-WIFI-1



KX-UT670 Smart Desktop Phone from Panasonic.

Control your comfort and efficiency with the lowest energy consumption

What's Internet Control?

Internet Control is a next generation system providing a user-friendly remote control of air conditioning or heat pump units from everywhere, using a simple Android or iOS smartphone, tablet or PC via internet.

Simple Installation

Just connect the Internet Control device to the air conditioner or heat pump with the supplied wire and then link it to your WIFI Access point.

Internet Control. Easy to install. Maximum benefit

Internet Control is underlined with the slogan "Your home in the cloud", meaning a simple and easy to handle solution has been considered for every user to manage the device, not requiring any communication or computer skills.

No servers. No adaptors. No wires. Just a small box is needed to be connected and placed close to the air conditioning indoor unit... and your smartphone, tablet or PC.

Start the App from your smartphone device, your tablet or your computer, and enjoy a new experience in comfort. An intuitive and user-friendly application on the screen of your smartphone or PC that lets you manage the air conditioning unit in the same way you do with the remote controller. Internet Control can be downloaded in Apple's AppStore and Android's PlayStore.

Control your air conditioning with the smart internet control device via smartphones, tablet, PC and smart desktop phone via internet

Offering the same functions as if you were at home or office: start/stop, Mode Operation, Set Temperature, Room Temperature etc as well as the new, advanced functionality provided by Internet Control to achieve the best comfort and efficiency with the lowest energy consumption.





Case Study. Alice, Shop Owner

"I want maximum comfort and the best savings for my shop. And I manage to get these in the easiest and most natural way possible. From my smartphone, something I always carry with me, I can control the temperature of my shop and in this way, as well as maintaining an ideal temperature I also save a small fortune in electricity at the end of the year."

Take control from wherever you are!

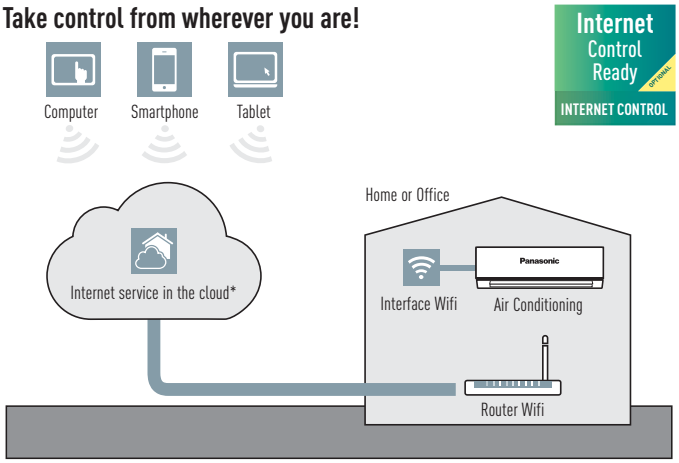

* Functionalities depend on the license. The information indicated above is subject to changes and updates.

PACi Connectivity. Easy connection to KNX, Modbus, LonWorks and BACnet

Easy control by BMS

CONNECTIVITY



AIRZONE



Airzone. Control of the PACi Hide Aways

Airzone has developed interfaces to easily connect to Panasonic PACi Hide Away units. Ensuring optimum performance, comfort and energy savings, the new system is efficient and easy to install.

Airzone full range of accessories for any duct project



Different type of outlets



Also plenum automatic doors



Full range of RC (wired/ wireless, ...)

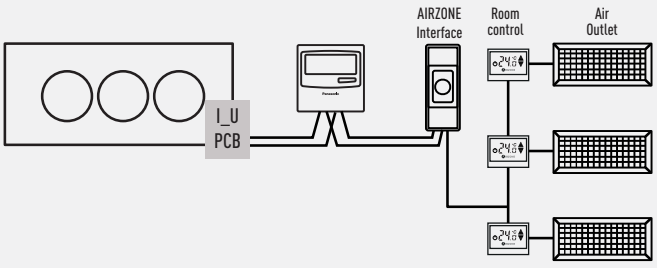

Panasonic Partners have designed solutions specifically for Panasonic air conditioners, and provide complete monitoring, control and full functionality of the entire Commercial line-up from KNX / Modbus / LonWorks / BACnet installations.
Great flexibility for integration into your KNX / Modbus / LonWorks / BACnet projects allows fully bi-directional monitoring and control of all the functioning parameters.

For more information, contact Panasonic.

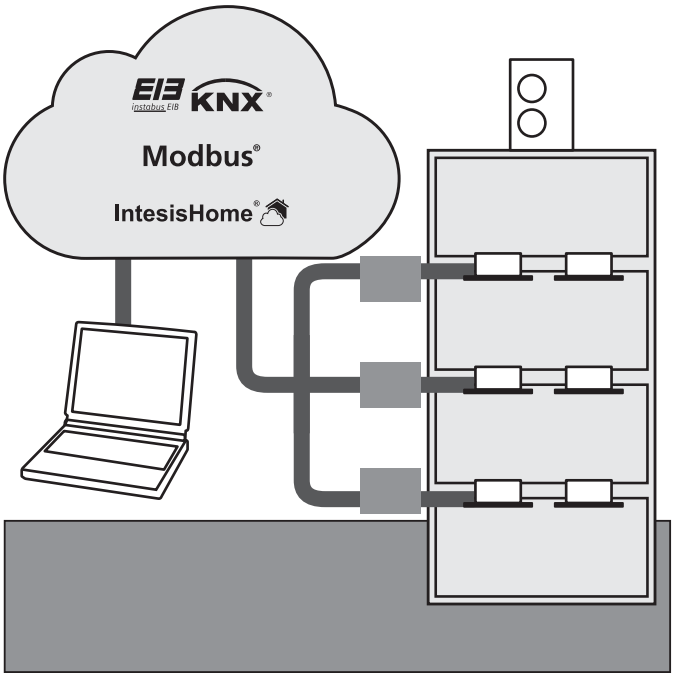

	Panasonic model name	Interface	Connected on the indoor unit	Maximum number of indoor units connected
PACi indoor units	PAW-RC2-KNX-1i	KNX	Indoor unit	1 (1 Group of Indoor units)
	PAW-RC2-MBS-1	Modbus RTU*	Indoor unit	1 (1 Group of Indoor units)
	PA-RC2-WIFI-1	IntesisHome	Indoor unit	1 (1 Group of Indoor units.)

* Interface Modbus RTU/TCP is needed

PACi, ECOi and ECO G Connectivity indoor units

PCB's and cables for PACi, ECOi and ECO G indoor units		
Name of the cables	**Function**	**Comment**
CZ-T10	All T10 functions	Requires field supplied accessory
PAW-FDC	Operate external fan	Requires field supplied accessory
PAW-OCT	All option monitoring signals	Requires field supplied accessory
CZ-CAPE2	Option monitoring signals wo. fan	Requires aditional wires from spare part supply
PAW-EXCT	Forced Thermo OFF/Leakage D.	Requires field supplied accessory
Name of the PBC	**Function**	**Comment**
PAW-T10	All T10 functions	Allows easy connection "Plug & Play"
PAW-T10V	All T10 functions + powermonitoring	Same like PAW-T10 + monitoring the power supply of indoor unit
PAW-T10H	ON/OFF; Prohibit 5VDC & 230VAC	Specials for single hotel card or window contact
PAW-T10HW	ON/OFF; Prohibit 5VDC	For hotel card + window contact at same time
PAW-PACR3	Redundancy of 2 or 3 systems; for PACi and ECOi	Redundancy of 2 or 3 PACi systems including temperature monitoring, error indication, backup, alternative run
PAW-SERVER-PKEA	Redundancy of 2 units PKEA	Redundancy of 2 units PKEA including temperature monitoring, error indication, backup, alternative run

T10 connector (CN015)

CZ-T10: Panasonic has developed an optional accessory (consisting of plug + wires) called CZ-T10 to enable an easy connection to this T10 connector.



Connecting an ECOi indoor unit to an external device is easy. The T10 terminal featured in the electronic circuit board of all indoor units enables digital connection to external devices.

EXAMPLE OF APPLICATIONS





T10 terminal Specification (T10: CN015 at indoor unit PCB)

- Control items: 1. Start/stop input
  2. Remote controller prohibit input
  3. Start signal output
  4. Alarm signal output

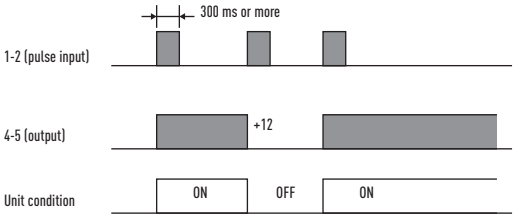

NOTE: The wire length from indoor unit to the Relay must be within 2.0 m. Pulse signal changeable to static with JP cutting. (Refer to JP001)

- Condition

1. 1-2 (Pulse input): Unit ON/OFF condition switching with a pulse signal. (1 pulse signal: shortage status more than 300 msec. or more)
2. 2-3 (Static input): Open / Operation with Remote is permitted.(Normal condition) Close / Remote controller is prohibited.
3. 4-5 (Static output): 12 V output during the unit ON. / No output at OFF.
4. 5-6 (Static output): 12 V output when some errors occur / No output at normal.

- Example of wiring

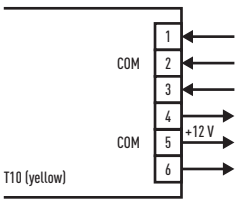

Usage Example

Forced OFF control

Term 1 & 2: Free contact for ON/OFF signal (cut *JP1* for static signal) when the hotel card is it connected the contact must be close (the unit can be used).

Term 2 & 3: Free contact to prohibit all function in the remote controller install in the room when the hotel card is it removed the contact must be closed (the unit can not work).

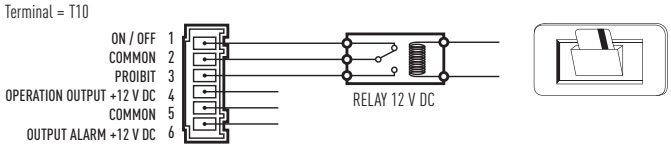

Operation ON/OFF signal output

- Condition:
  4-5 (Static output): 12 V output during the unit ON / No output at OFF
- Example of wiring

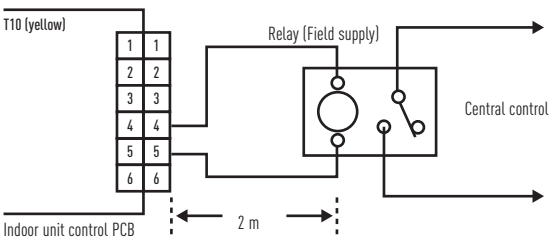

NOTE: The wire length from indoor unit to the Relay must be within 2.0 m. Pulse signal changeable to static with JP cutting. (Refer to JP001)

Fan Drive Connector (CN032)

PAW-FDC: Panasonic has developed an optional accessory (consisting of plug + wires) called PAW-FDC to enable an easy connection to this Fan Drive Connector (CN032).



Operating the ventilation fan from the remote controller

- Start / stop of external ventilation and total heat exchanger fans
- Works even if indoor unit is stopped
- In case of group control ➔ all fans will operate; no individual control

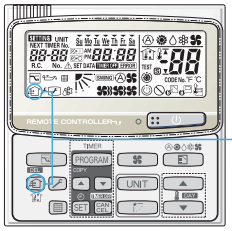

EXTERNAL FAN ON / OFF

Ventilation button

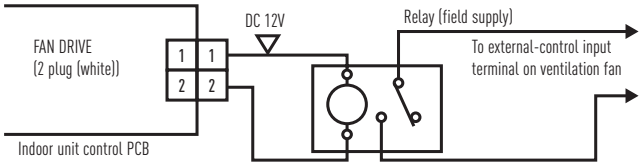

Option Connector (CN060) Output external signals



PAW-OCT: Panasonic has developed an optional accessory (consisting of plug + wires) called PAW-OCT to enable an easy connection to this Option Connector (CN060).

With the combination of the T10 and the option CN060 an external control of the I_U is possible!

6P (WHITE): OUTPUTS EXTERNAL SIGNALS AS SHOWN IN THE FIGURE BELOW.

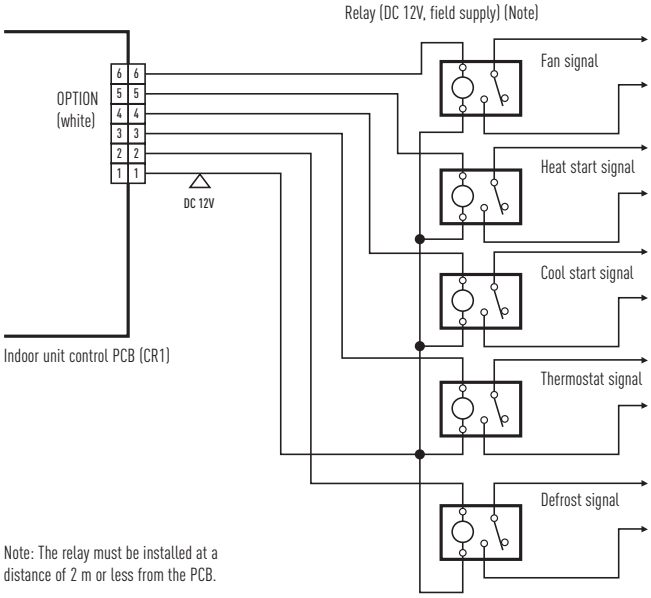

Note: The relay must be installed at a distance of 2 m or less from the PCB.

EXCT Connector (CN009)

PAW-EXCT: Panasonic has developed an optional accessory (consisting of plug + wires) called PAW-EXCT to enable an easy connection to this EXCT Connector (CN009).

A) With static input
➔ STATIC INPUT ➔ THERMO OFF ➔ ENERGY SAVING

2P plug (red): Can be used for demand control. When input is present, forces the unit to operate with the thermostat OFF.

Note: The length of the wiring from the indoor unit control PCB to the relay must be 2m or less.
* Lead wire with 2P plug (special—order part: WIRE K/854 05280 75300)

- Examples of wiring:

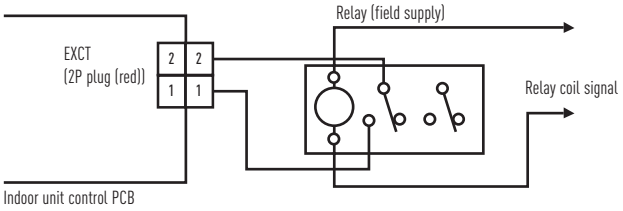

B) Example: In connection with a refrigerant sensor

- Signal from leakage detector: non voltage, static.
- Indoor unit setting: Code 0b ➔ 1
- Connector for leak detector: EXCT
- Outdoor unit setting:
  Code C1 ➔ 1 power output if alarm from O2 connector 230 V
  Code C1 ➔ 2 power output if alarm from O2 connector 0 V
- Displayed alarm message P14

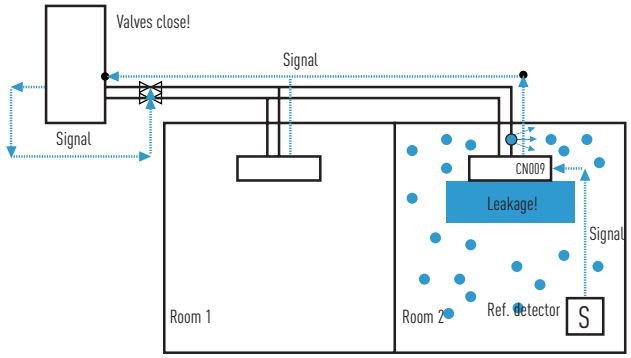



R22 Renewal. Why renewal?

Unique R22 Renewal from Panasonic: Fast, easy to install and Cost effective

- Panasonic refrigerant oil doesn't react to the most common oil types used in air-conditioning systems. This ensures the mix of oil does not damage the units. Therefore installations are easier.
- All Panasonic PACi units can be installed in R22 pipings, no specific models are available.
- Up to 33 Bar! When there is any doubt about the strength of the piping, the maximum working pressure can be reduced to 33 Bar with a setting in the software of the outdoor unit.

An important drive to further reduce the potential damage to our ozone

It is often said that legislation is ruling our lives but sometimes it is there to help save lives. R22 phase out can be described as one of these and from Jan 1st 2010 the use of Virgin (new) R22 refrigerant was banned within the European Community.

Panasonic are doing our part

We at Panasonic are also doing our part – recognising that all finances are under pressure at the moment. Panasonic has developed a clean and cost effective solution to enable this latest legislation to be introduced with as minimum an effect on businesses and cash reserves as possible.
The Panasonic renewal system allows good quality existing R22 pipe work to be re-used whilst installing new high efficiency R410A systems.
By bringing a simple solution to the problem Panasonic can renew all Split Systems and PACi systems; and depending upon certain restrictions we don't even limit the manufacturer's equipment we are replacing.
By installing a new high efficiency Panasonic R410A system you can benefit from around 30% running cost saving compared to the R22 system.

Yes...
1. Check the capacity of the system you wish to replace
2. Select from the Panasonic range the best system to replace it with
3. Follow the procedure detailed in the brochure and technical data

Simple...

R22 - The reduction of Chlorine critical for a cleaner future

Reuse of existing piping (Renewal Design & Installation)

Notes on reuse of existing refrigerant piping

It is possible for each series of PE1 type and PEY1 type outdoor unit to reuse the existing refrigerant piping without cleaning when obtained under certain conditions.. Make sure that the requirements under the section "Notes on reuse of existing refrigerant piping", "Measurement procedure for renewal" and "Refrigerant piping size and allowable piping length" will be satisfied in order to carry out .
Also, check the items with regard to section "Safety" and "Cleaning".

1. Prerequisite

- If the refrigerant used for the existing unit is other than R22, R407C and R410A, the existing refrigerant piping cannot be used.
- If the existing unit has another use than air conditioning, then existing refrigerant piping cannot be used.

2. Safety

- If there is a hollow, crack or corrosion on the piping, make sure to install new piping.
- If the existing piping is other than capable of reuse of piping as shown in the flowchart, make sure to install new piping.
- In case of multiple operation type, use our genuine branch piping for refrigerant R410A.

A local supplier shall assume responsibility for the defects and hollows on the reuse of existing piping surface and recognition of reliability of the piping strength. There is no guarantee that we take responsibility for such damages.
The operational pressure of the refrigerant R410A becomes higher compared to R22. In the worst case, a lack of compressive strength may lead to piping explosion.

3. Cleaning

- When the refrigerant oil used for the existing unit is other than the listed below, make sure to install new piping or wash it thoroughly before reusing it.
  [Mineral Oil] SUNISO, FIORE S, MS
  [Synthesized oil] alkyl benzene oil (HAB, parallel freeze), ester oil, ether oil (PVE only)

If the existing unit is GHP type, it is necessary to wash the piping thoroughly.

- If the existing pipes in the outdoor and indoor units remain disconnected, make sure to install a new piping or wash it thoroughly before reusing it.
- If the discoloured oil or residue remains in the existing piping, make sure to install a new piping or wash it thoroughly before reusing it. See "Deterioration Criteria for Refrigerant Oil" in table 3.
- If the compressor of the existing air conditioner has a failure history, make sure to install a new piping or wash it through thoroughly before reusing it.

When reusing the existing piping as it is without removing dirt and dust, inadequate piping could result a renewal appliance in failure.

Notes on renewal for simultaneous operation of multiple units

Only main pipe is applicable for using the different diameter size.
In case of different diameter size for the branch pipes, a new installation work for a standard size is necessary.
Be sure to use our genuine branch piping for refrigerant R410A.

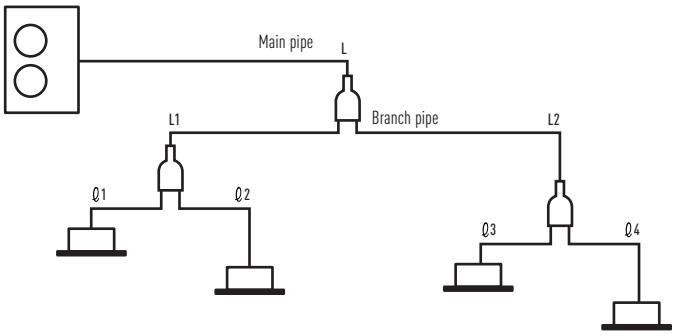

Notes on Renewal for Simultaneous Operation of Multiple Units		
Capacity class	Standard liquid pipe size	Standard gas pipe size
Type 50	Ø 6,35	Ø 12,7
Type from 60 to 140	Ø 9,52	Ø 15,88
Type 200	Ø 9,52	Ø 25,4
Type 250	Ø 12,7	

- Only the main pipe L can be used among different diameter's existing piping.
- Installation work as a standard size is capable for L1, L2, l1 - l4 piping.
- Be sure to use our genuine branch piping for refrigerant R410A.

1. In case of single unit

It is not necessary to charge with additional refrigerant until the chargeless pipe length in the table 2.
If the pipe length is exceeding the charge less pipe length, charge with additional refrigerant amount per 1 m according to the equivalent length.

2. In case of simultaneous operation of multiple units

Calculate the refrigerant charging amount according to the calculating method of the standard piping diameter.
As to the additional refrigerant charging amount per 1 m, refer to the additional amount in the table 2.

Measurement Procedure for Renewal

Observe the following procedure when reusing the existing piping or carrying out renewal installation work.
Flowchart of Existing Piping Measures Criteria for PE1 Type and PEY1 Type Outdoor Unit

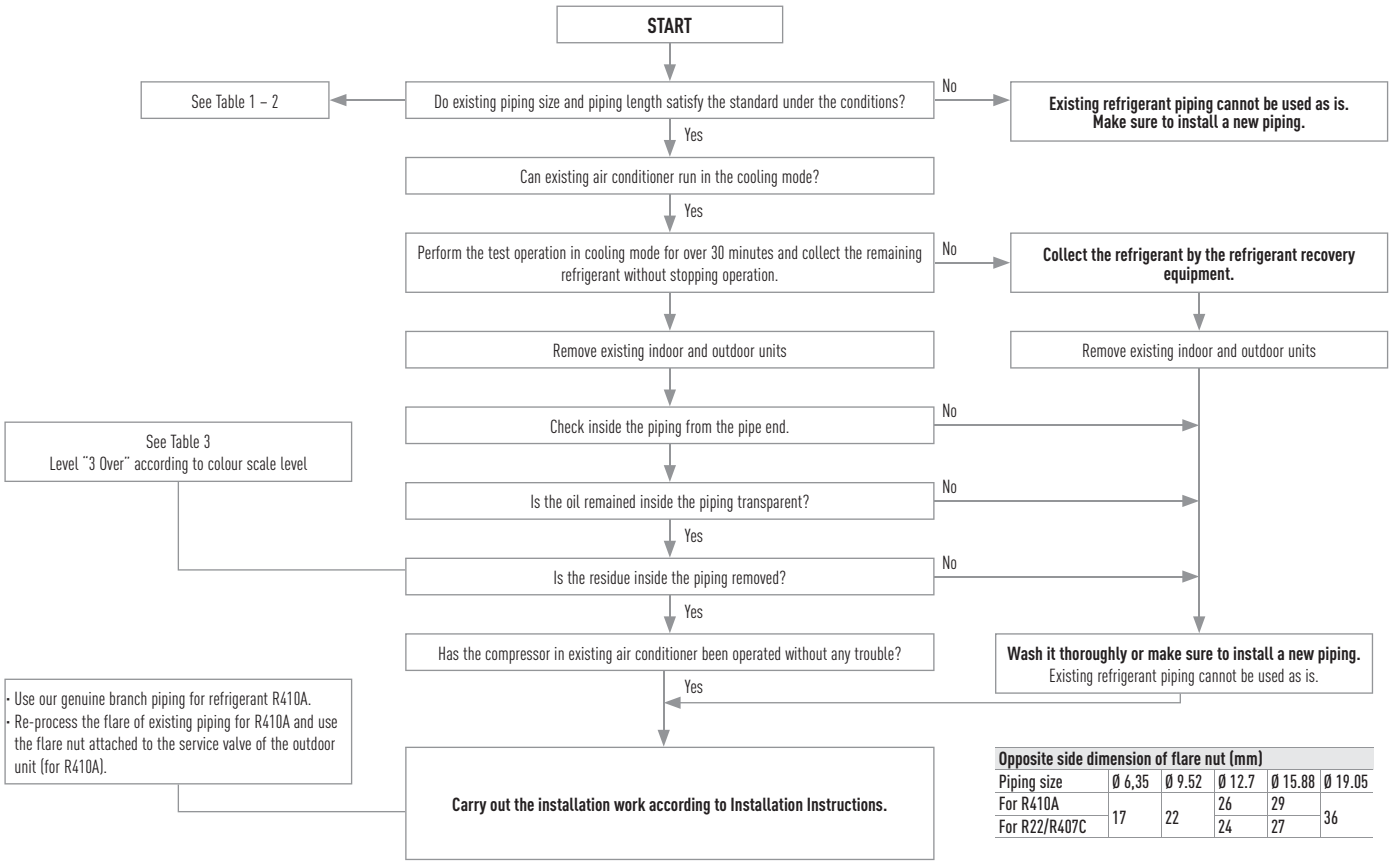

Opposite side dimension of flare nut (mm)					
Piping size	Ø 6,35	Ø 9.52	Ø 12.7	Ø 15.88	Ø 19.05
For R410A	17	22	26	29	36
For R22/R407C			24	27	

R22 Renewal

Refrigerant piping size and allowable piping length

Check if reuse of existing refrigerant piping is possible based on the following chart.
The standards other than this one (difference of elevation, etc.) are identical to the requirements of ordinary refrigerant piping.

Table 1 Reusable existing piping (mm)

Material	O				1/2 H, H*			
External diameter	Ø 6,35	Ø 9,52	Ø 12,7	Ø 15,88	Ø 19,05	Ø 22,22	Ø 25,4	Ø 28,58
Thickness	0,80	0,80	0,80	1,00	1,00	1,00	1,00	1,00

* It is impossible to reuse the size of Ø 19.05, Ø 22.22, Ø 25.4 and Ø 28.58 for material O. Change to material 1/2H or material H.

Table 2 - 1 Refrigerant piping size: 3,6 - 14,0 kW type (mm)

Liquid pipe		Ø 6,35			Ø 9,52			Ø 12,7	
Gas pipe		Ø 9,52	Ø 12,7	Ø 15,88	Ø 12,7	Ø 15,88	Ø 19,05	Ø 15,88	Ø 19,05
PE	Type 50	✕	Standard 40 m (30 m)	◎ 40 m (30 m)	□ 20 m (15 m)	□ 20 m (15 m)	✕	✕	✕
PEY	Type 60 Type 71	✕	▽ 10 m (10 m)	□ 10 m (10 m)	▽ 30 m (20 m)	Standard 50 m (20 m)	✕	□ 25 m (10 m)	✕
Additional refrigerant charging amount per 1 m		20 g/m			40 g/m			80 g/m	
PE	Type 60 Type 71	✕	▽ 10 m (10 m)	□ 10 m (10 m)	▽ 30 m (30 m)	Standard 50 m (30 m)	✕	□ 25 m (15 m)	✕
	Type 100 Type 125 Type 140	✕	✕	✕	✕	Standard 75 m (30 m)	◎ 75 m (30 m)	□ 35 m (15 m)	□ 35 m (15 m)
PEY	Type 100 Type 125 Type 140	✕	✕	✕	✕	Standard 50 m (30 m)	◎ 50 m (30 m)	□ 25 m (15 m)	□ 25 m (15 m)
Additional refrigerant charging amount per 1 m		20 g/m			50 g/m			80 g/m	

How to see table definition (example):
In case of type 71, standard size is liquid pipe Ø 9,52 / gas pipe Ø 15,88,
There is a limitation to liquid pipe Ø 9,52 / gas pipe Ø 12,7and to liquid pipe Ø 12,7 / gas pipe Ø 15,88,
However, they are applicable for different diameter's pipes.

Table 2 - 2 Refrigerant piping size: 20,0 - 25,0 kW type (mm)

Liquid pipe		Ø 9,52			Ø 12,7			Ø 15,88		
Gas pipe		Ø 22,22	Ø 25,4	Ø 28,58	Ø 22,22	Ø 25,4	Ø 28,58	Ø 22,22	Ø 25,4	Ø 28,58
PE	Type 200	▽ 80 m (30 m)	Standard 100 m (30 m)	◎ 100 m (30 m)	▽ 50 m (15 m)	□ 50 m (15 m)	□ 50 m (15 m)	✕	✕	✕
	Type 250	✕	✕	✕	▽ 80 m (30 m)	Standard 100 m (30 m)	◎ 100 m (30 m)	▽ 65 m (20 m)	□ 65 m (20 m)	□ 65 m (20 m)
Additional refrigerant charging amount per 1 m		40 g/m			80 g/m			120 g/m		

◎ Allowable
▽ Cooling capacity down
□ Limited piping length
✕ Unallowable
50 m Maximum piping length
(50 m) Charge less piping length in a single connection

Table 3 Deterioration Criteria for Refrigerant Oil

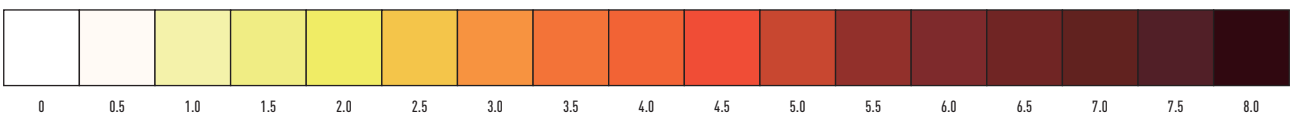



Control equipment external dimensions

Control Systems

TIMER REMOTE CONTROLLER
(CZ-RTC2)

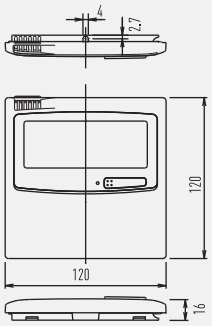

WIRELESS REMOTE CONTROLLER

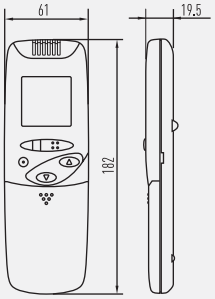

SEPARATE RECEIVER FOR WIRELESS REMOTE CONTROLLER

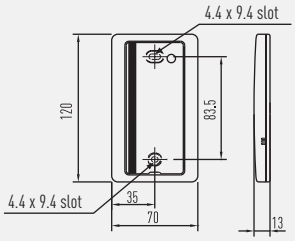

SIMPLIFIED REMOTE CONTROLLER
(CZ-RE2C2)

REMOTE SENSOR
(CZ-CSRC2)

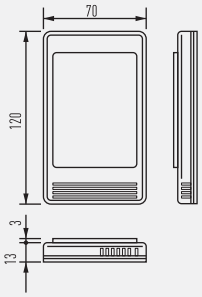

SYSTEM CONTROLLER
(CZ-64ESMC2)

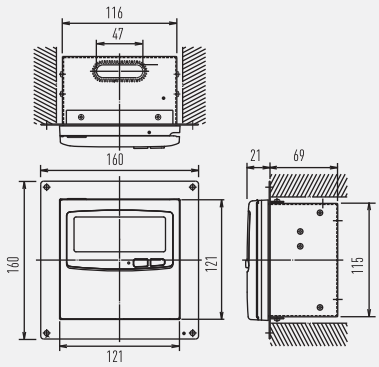

INTELLIGENT CONTROLLER
(CZ-256ESMC2)

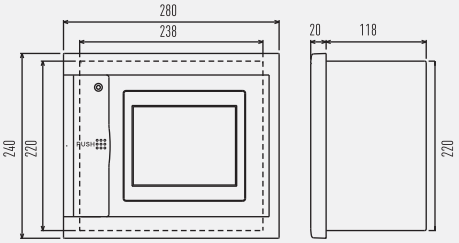

COMMUNICATION ADAPTER
(CZ-CFUNC2)

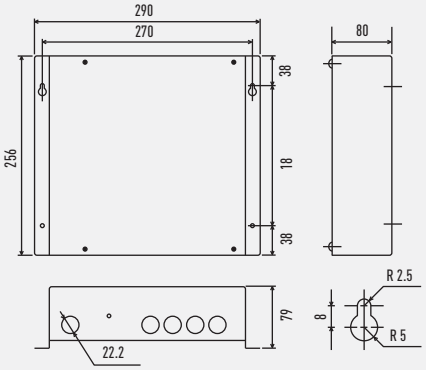

ON/OFF CONTROLLER
(CZ-ANC2)

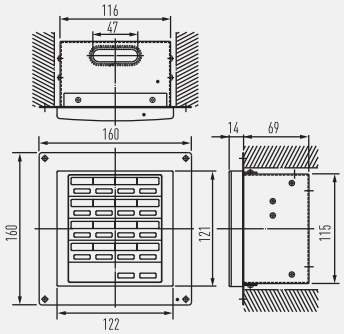

SERI-PARA I/O UNIT FOR EACH INDOOR UNIT
(CZ-CAPBC2)

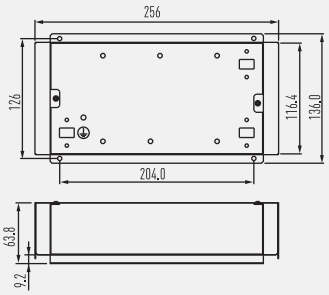

LONWORKS INTERFACE
(CZ-CLNC2)

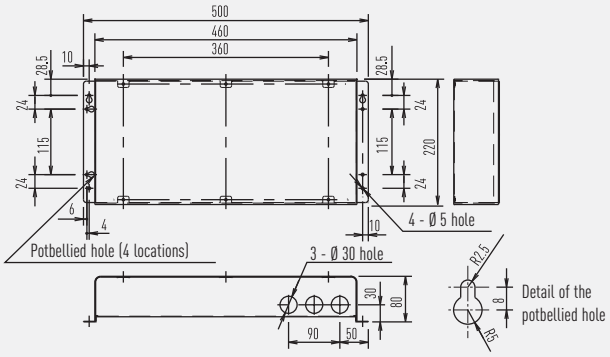

SERI-PARA I /O UNIT FOR OUTDOOR UNIT
(CZ-CAPDC2)

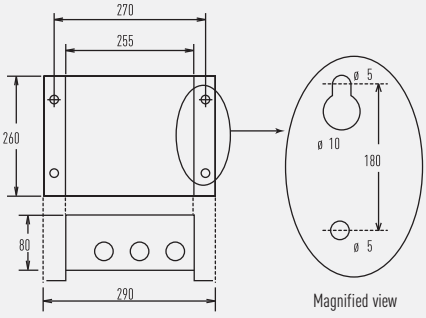

PKEA dimensions

Wall Mounted PKEA

CS-E9PKEA // CS-E12PKEA

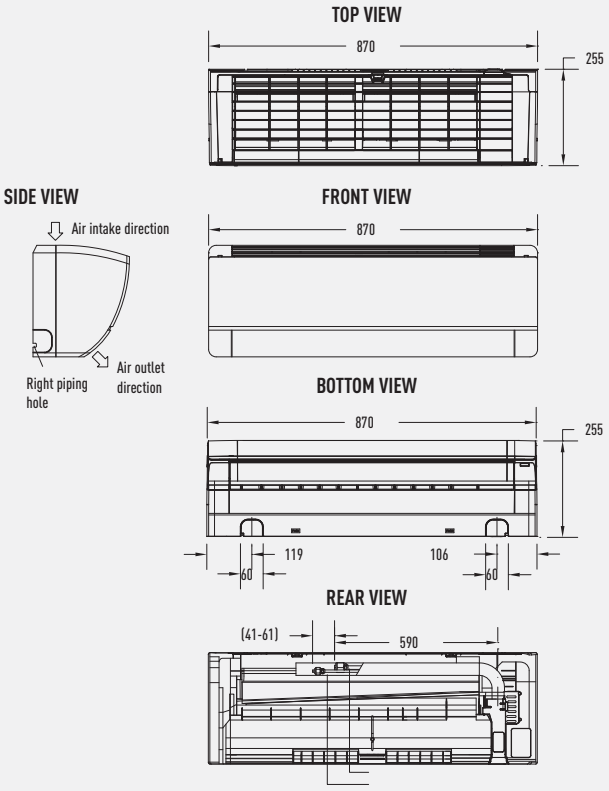

CS-E15PKEA // CS-E18PKEA

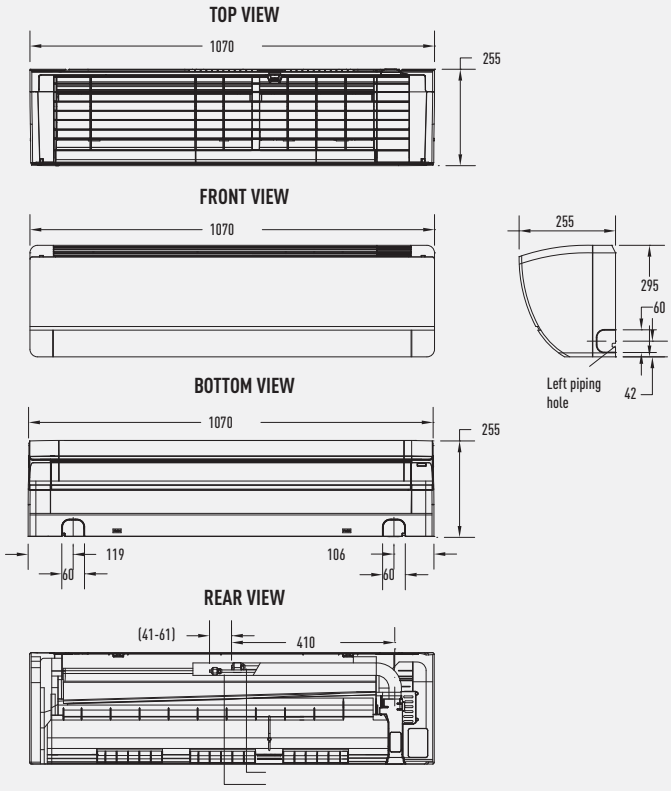

CU-E9PKEA // CU-E12PKEA

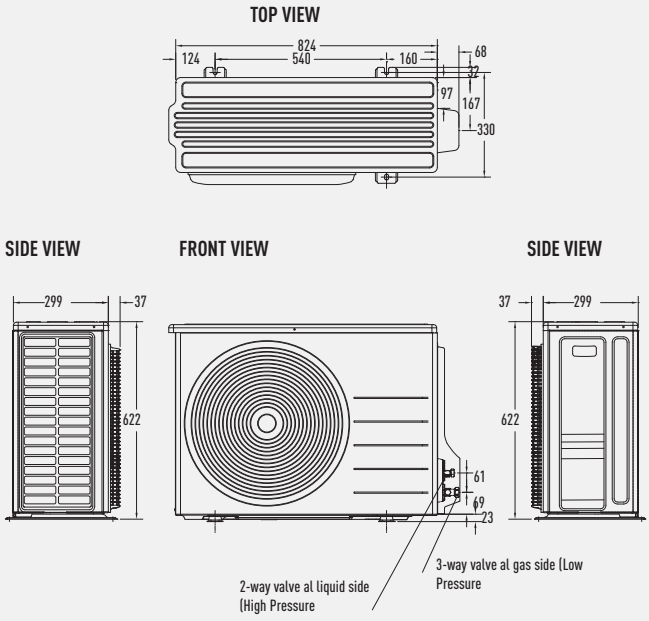

CU-E15PKEA // CU-E18PKEA

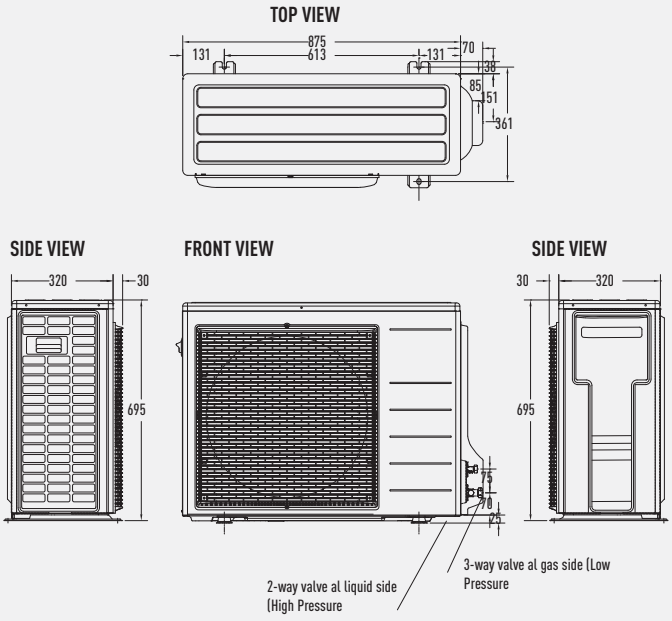

Dimensions: mm

PACi Standard and Elite dimensions

Wall

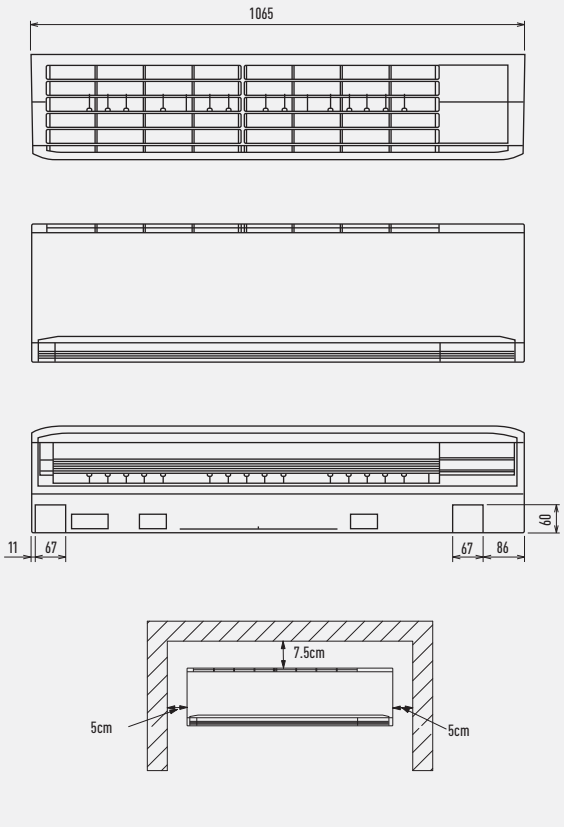

Type		36 - 50	60 - 100
1	Refrigerant tubing (liquid tube)	Ø 6,35 (flared)	Ø 9,52 (flared)
2	Refrigerant tubing (gas tube)	Ø 12,7 (flared)	Ø 15,88 (flared)
3	Drain hose VP13	Outer diameter Ø 18	
4	Rear panel	PL BACK	
5	Tubing and wiring holes	Ø 80	

Dimensions: mm

4-Way 60x60 Cassette

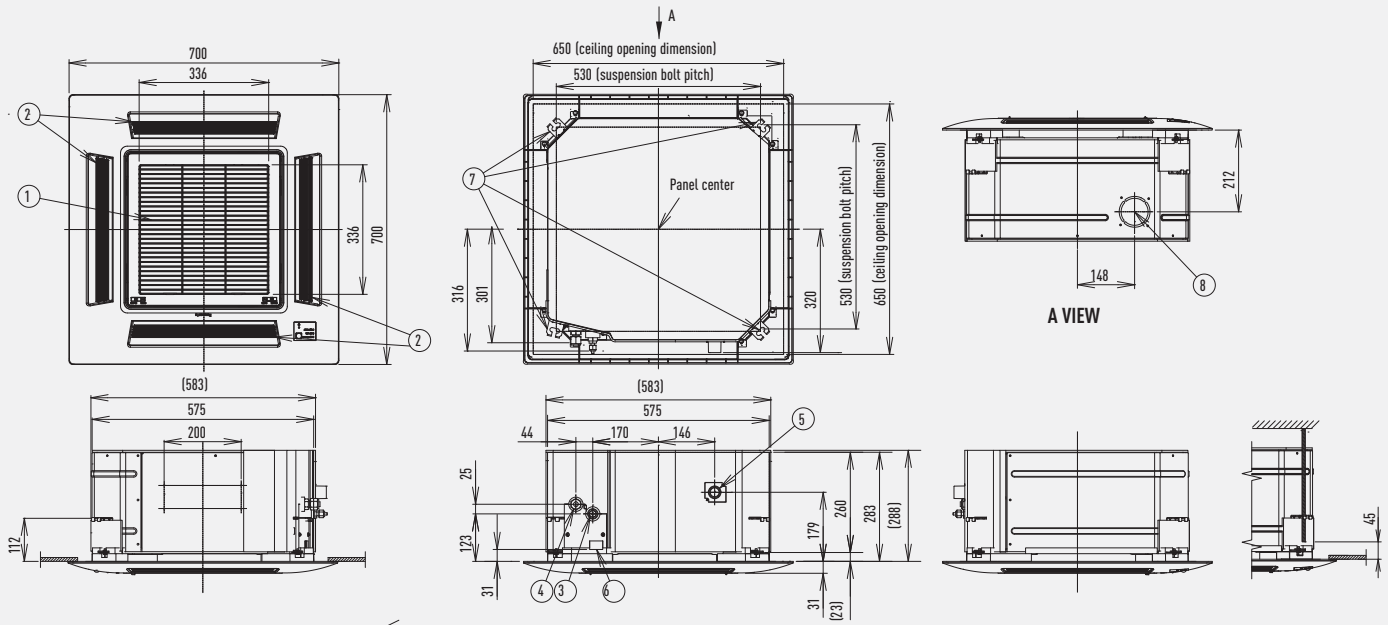

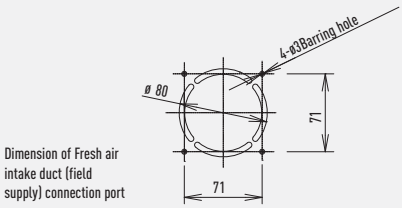

Dimension of Fresh air intake duct (field supply) connection port

1	Air intake	
2	Discharge outlet	
3	Refrigerant tubing (liquid tube)	Ø 6,35 (flared)
4	Refrigerant tubing (gas tube)	Ø 12,7 (flared)
5	Drain tube connection port VP25	Outer dia. Ø 32
6	Power supply port	
7	Suspension bolt hole	4-11 x 26 hole
8	Fresh air intake duct connection port	Ø 80

Adjust the suspension bolt length so that the gap from the lower ceiling surface becomes 45mm or more, as shown in the figure at right.
If the suspension bolts is too long, it will contact the ceiling panel and the unit cannot be installed.

Dimensions: mm

PACi Standard and Elite dimensions

4 Way 90x90 Cassette

Type		36 - 71	100 - 140
1	Air intake grill		
2	Air discharge outlet		
3	Refrigerant piping (liquid pipes)	Ø 6,35 (flared)	Ø 9,52 (flared)
4	Refrigerant piping (gas pipes)	Ø 12,7 (flared)	Ø 15,88 (flared)
5	Drain outlet VP50	Outer diameter 32mm	
6	Power supply port		
7	Discharge duct	Ø 150	
8	Suspension bolt hole	4-12x30 slot	
9	Fresh air intake duct connection port	Ø 100[1]	

1 Air inlet kit is necessary.
Filter size: 520 x 520 x 16

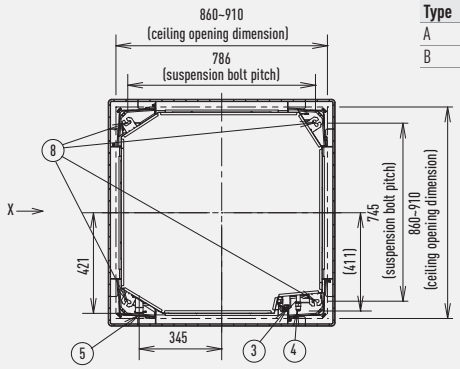

Type	36 - 71	100 - 140
A	256	319
B	124	187

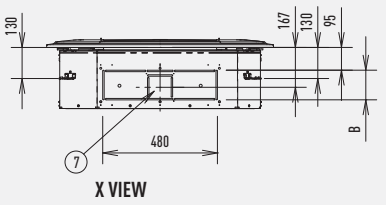

X VIEW

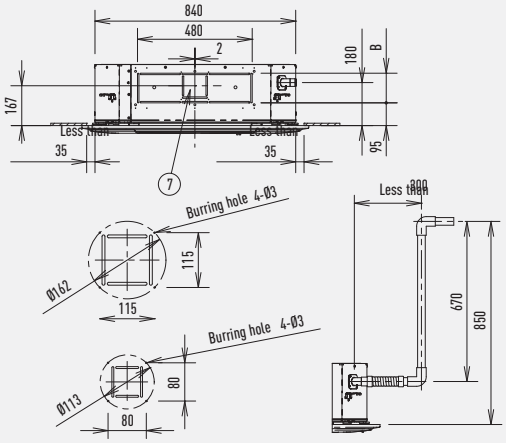

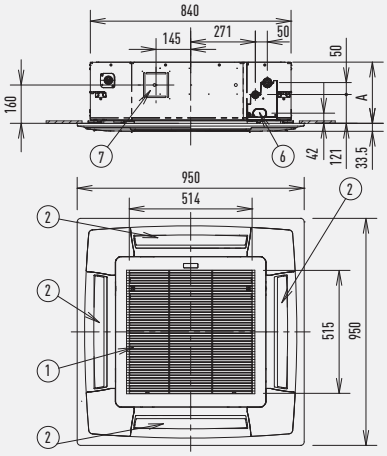

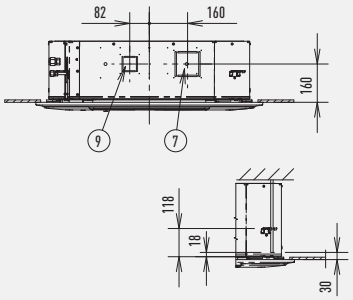

Adjust the suspension bolt length so that the gap from the lower ceiling surface becomes 30mm or more (18mm or more from the lower surface of the body) as shown in the figure. When the suspension bolt length is long, it hits the ceiling panel and installation is not possible.

Dimensions: mm

Low Static Pressure Hide Away

S-36PN1E5A // S-45PN1E5A // S-50PN1E5A

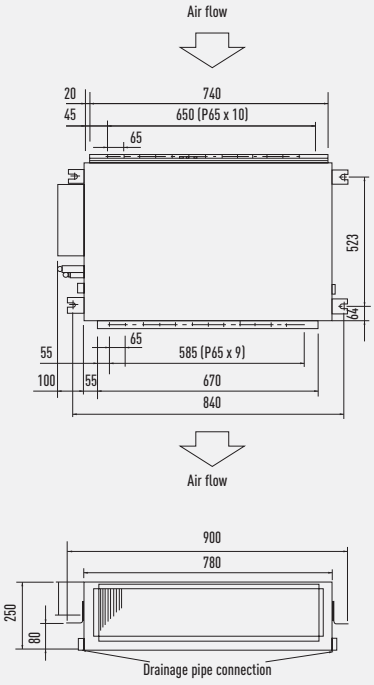

S-60PN1E5A // S-71PN1E5A

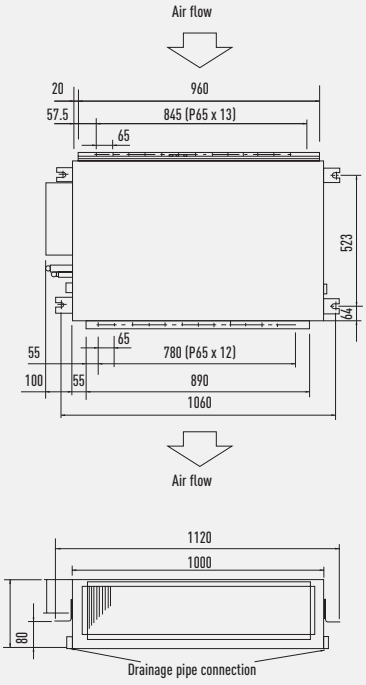

S-100PN1E5A // S-125PN1E5A // S-140PN1E5A

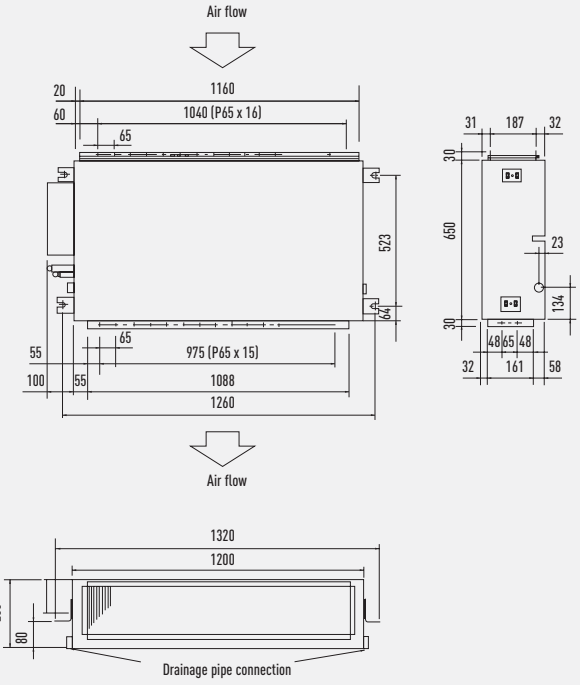

Dimensions: mm

High Static Pressure Hide Away

S-36PF1E5A // S-45PF1E5A // S-50PF1E5A

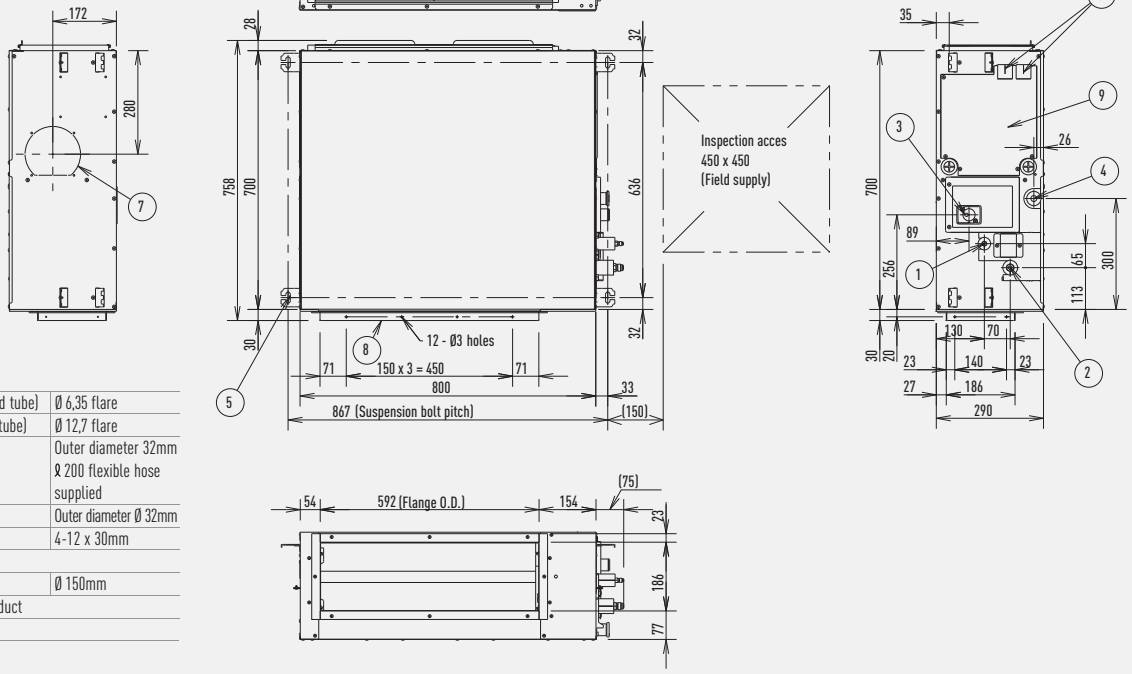

1	Refrigerant tubing joint (liquid tube)	Ø 6,35 flare
2	Refrigerant tubing joint (gas tube)	Ø 12,7 flare
3	Upper drain port VP25	Outer diameter 32mm & 200 flexible hose supplied
4	Bottom drain port VP 25	Outer diameter Ø 32mm
5	Suspension lug	4-12 x 30mm
6	Power supply outlet	
7	Fresh air intake port	Ø 150mm
8	Flange for flexible air outlet duct	
9	Electrical component box	

S-60PF1E5A // S-71PF1E5A

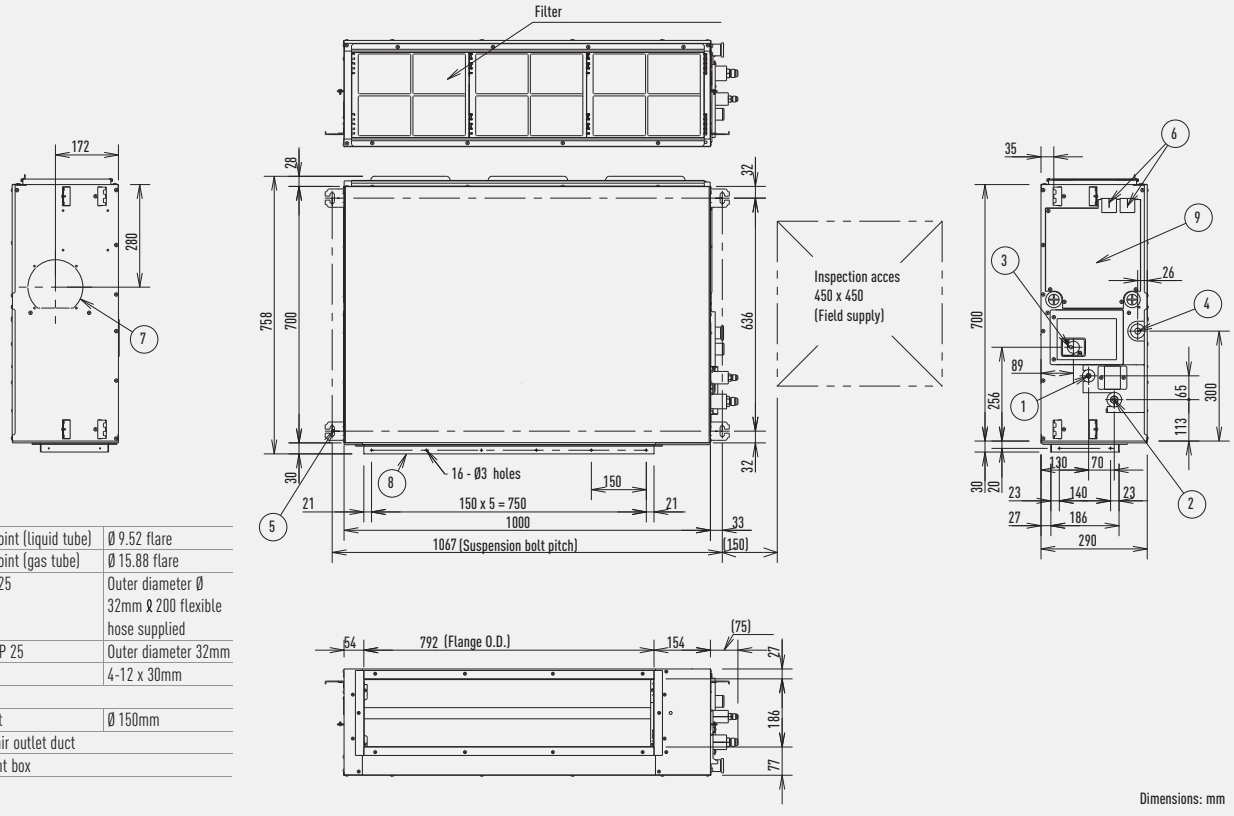

1	Refrigerant tubing joint (liquid tube)	Ø 9.52 flare
2	Refrigerant tubing joint (gas tube)	Ø 15.88 flare
3	Upper drain port VP25	Outer diameter Ø 32mm & 200 flexible hose supplied
4	Bottom drain port VP 25	Outer diameter 32mm
5	Suspension lug	4-12 x 30mm
6	Power supply outlet	
7	Fresh air intake port	Ø 150mm
8	Flange for flexible air outlet duct	
9	Electrical component box	

Dimensions: mm

High Static Pressure Hide Away (Cont.)

S-100PF1E5A // S-125PF1E5A // S-140PF1E5A

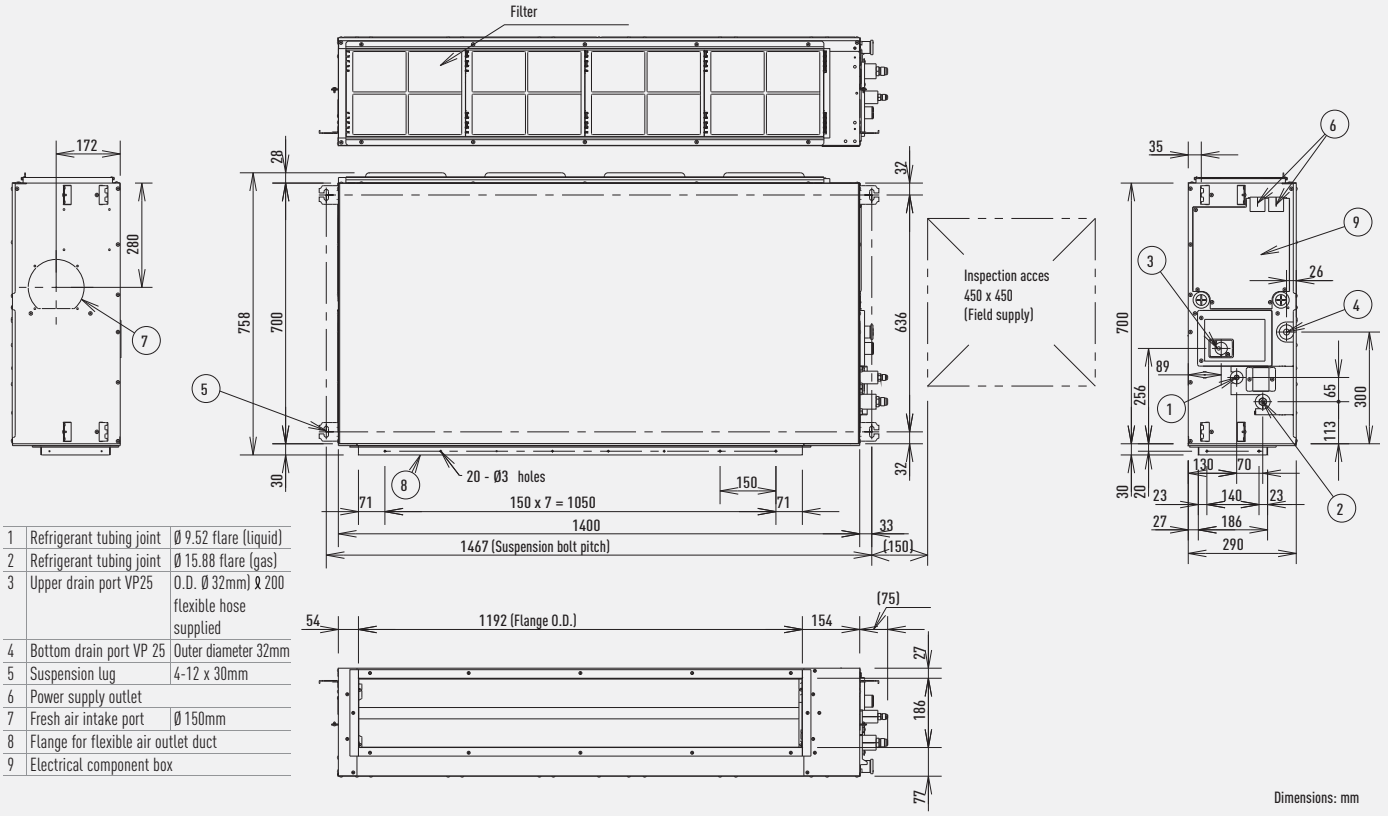

1	Refrigerant tubing joint	Ø 9.52 flare (liquid)
2	Refrigerant tubing joint	Ø 15.88 flare (gas)
3	Upper drain port VP25	O.D. Ø 32mm) ℓ 200 flexible hose supplied
4	Bottom drain port VP 25	Outer diameter 32mm
5	Suspension lug	4-12 x 30mm
6	Power supply outlet	
7	Fresh air intake port	Ø 150mm
8	Flange for flexible air outlet duct	
9	Electrical component box	

Dimensions: mm

Ceiling

S-60PT2E5A // S-71PT2E5A

1	Drain port VP20	Inside diameter Ø 26mm, drain hose supplied
2	Left drain position	
3	Refrigerant liquid tubing	Ø 9.52mm, flare connection
4	Refrigerant gas tubing	Ø 15.88mm, flare connection
5	Left side drain hose outlet port (cutout)	
6	Tubing hole on wall surface	Ø 100mm
7	Upper side tubing port	
8	Right side drain hose outlet port (cutout)	
9	Wireless remote controller receiver installation location	

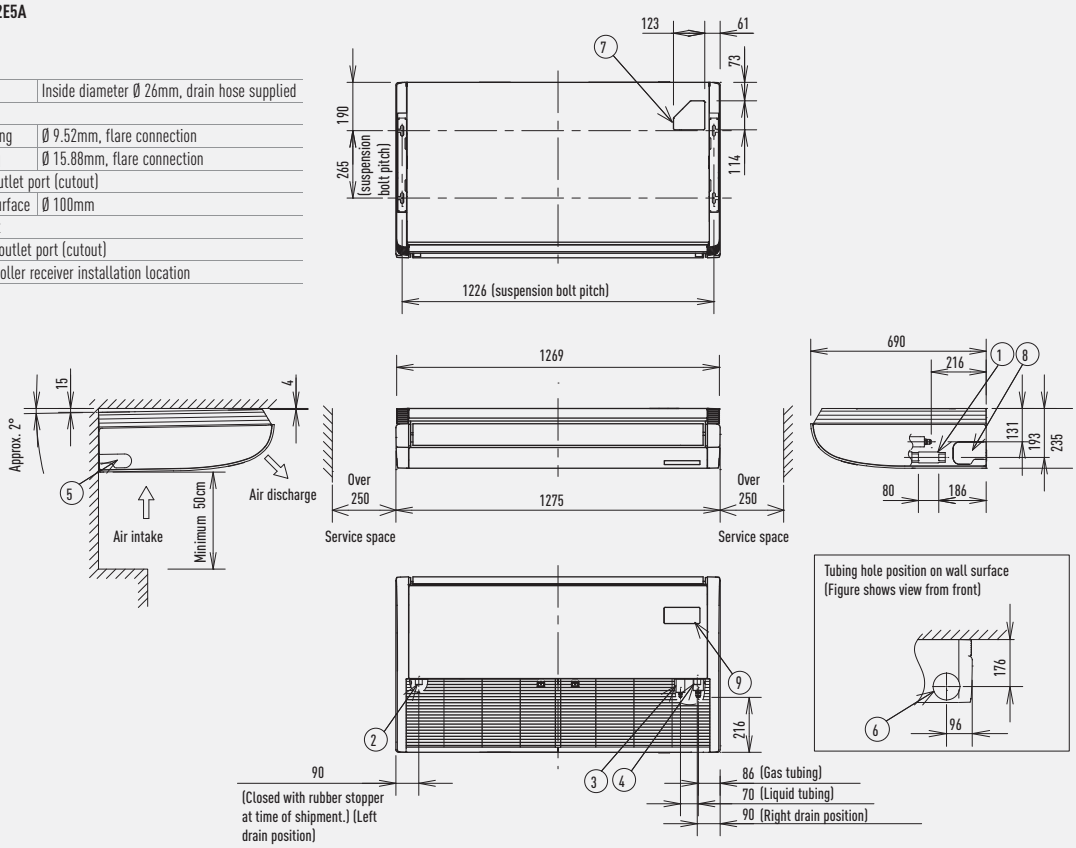

S-100PT2E5A // S-125PT2E5A

	A	B	C	D	E
100-125 type	1.590	230	690	1.584	1.541
140 type	1.655	360	820	1.599	1.606

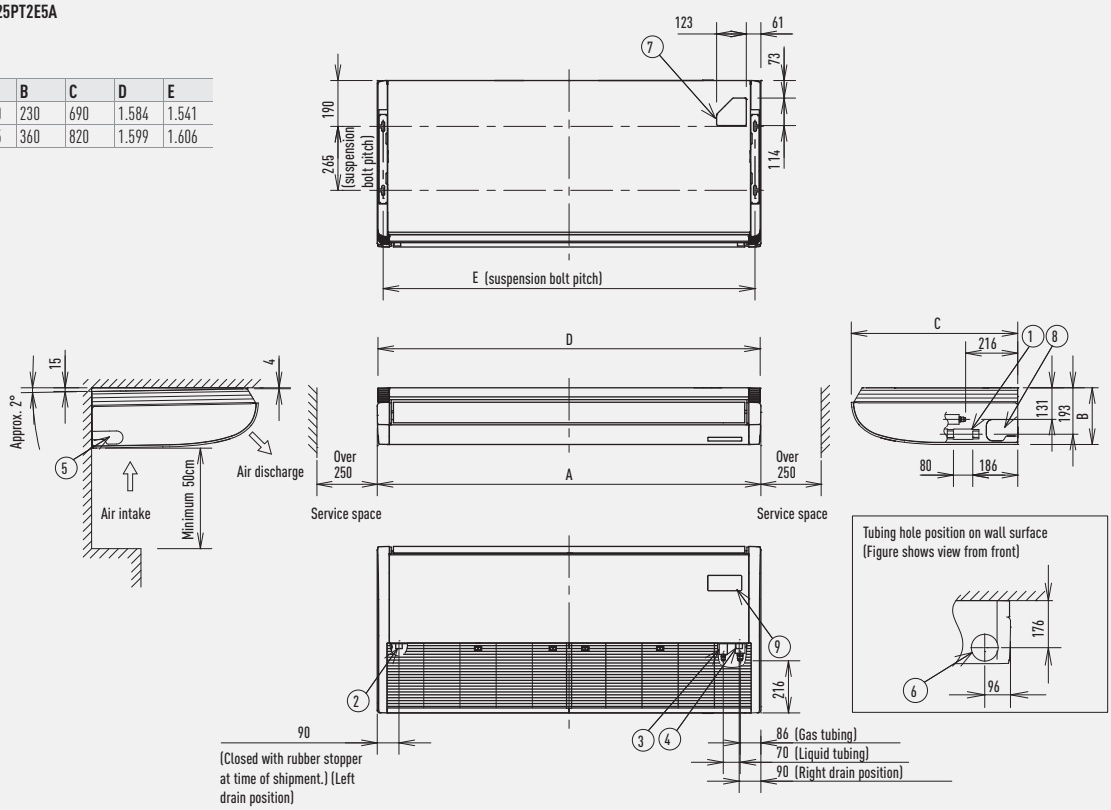

Dimensions: mm

PACi Standard and Elite dimensions

High Static Pressure Hide Away 20,0-25,0 kW

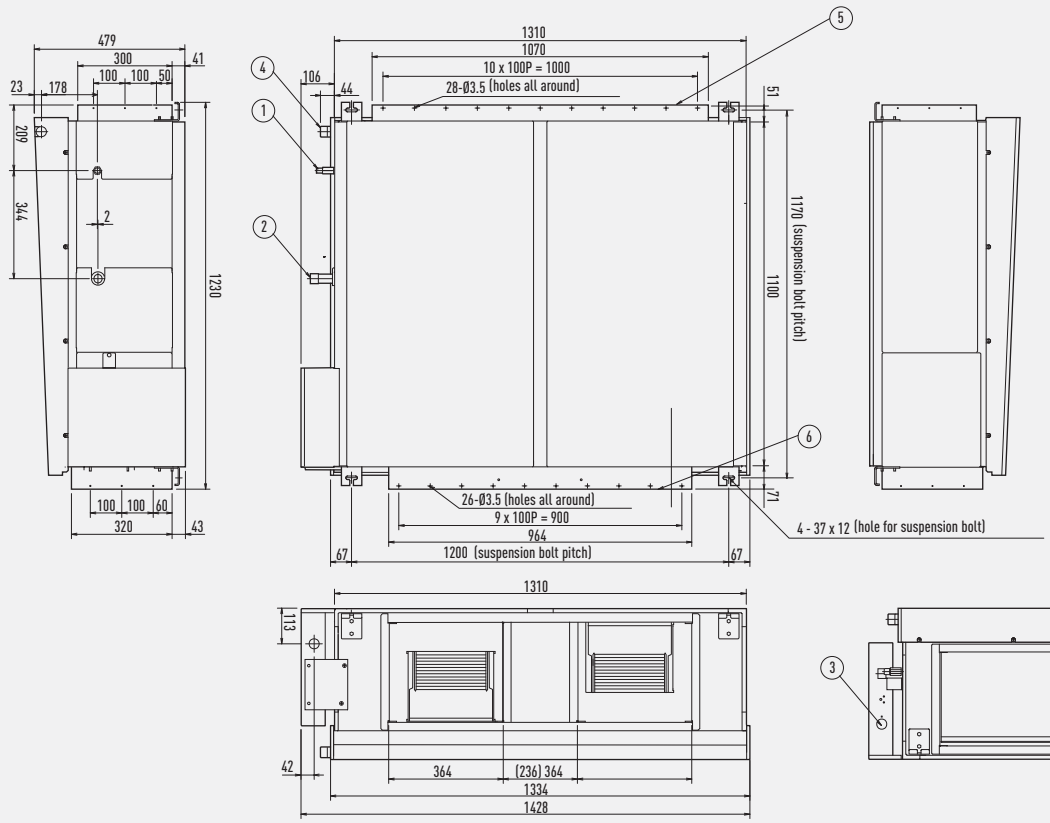

		200	250
1	Refrigerant liquid line	Ø 9.52	
2	Refrigerant gas line	Ø 19.05	Ø 22.22
3	Power supply outlet		
4	Drain port	Outer diameter 32 mm	
5	Duct connection for suction		
6	Duct connection for discharge		

Dimensions: mm

Outdoor Unit PACi Standard 6,0 and 7,1 kW and PACi Elite 5,0 kW

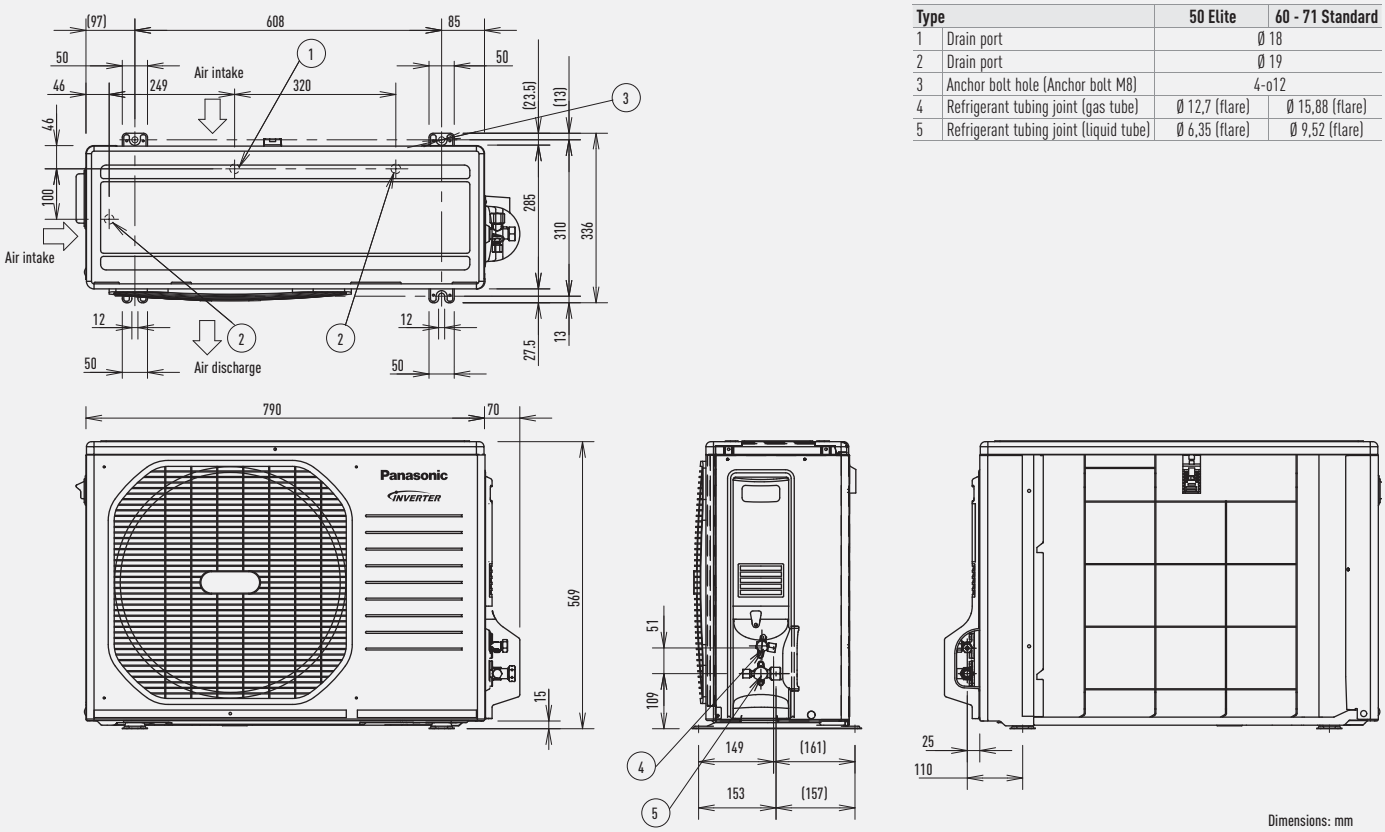

Type		50 Elite	60 - 71 Standard
1	Drain port	Ø 18	
2	Drain port	Ø 19	
3	Anchor bolt hole (Anchor bolt M8)	4-o12	
4	Refrigerant tubing joint (gas tube)	Ø 12,7 (flare)	Ø 15,88 (flare)
5	Refrigerant tubing joint (liquid tube)	Ø 6,35 (flare)	Ø 9,52 (flare)

Dimensions: mm

Outdoor unit PACi Standard 10,0 and 12,5 kW and PACi Elite 6,0 and 7,1 kW

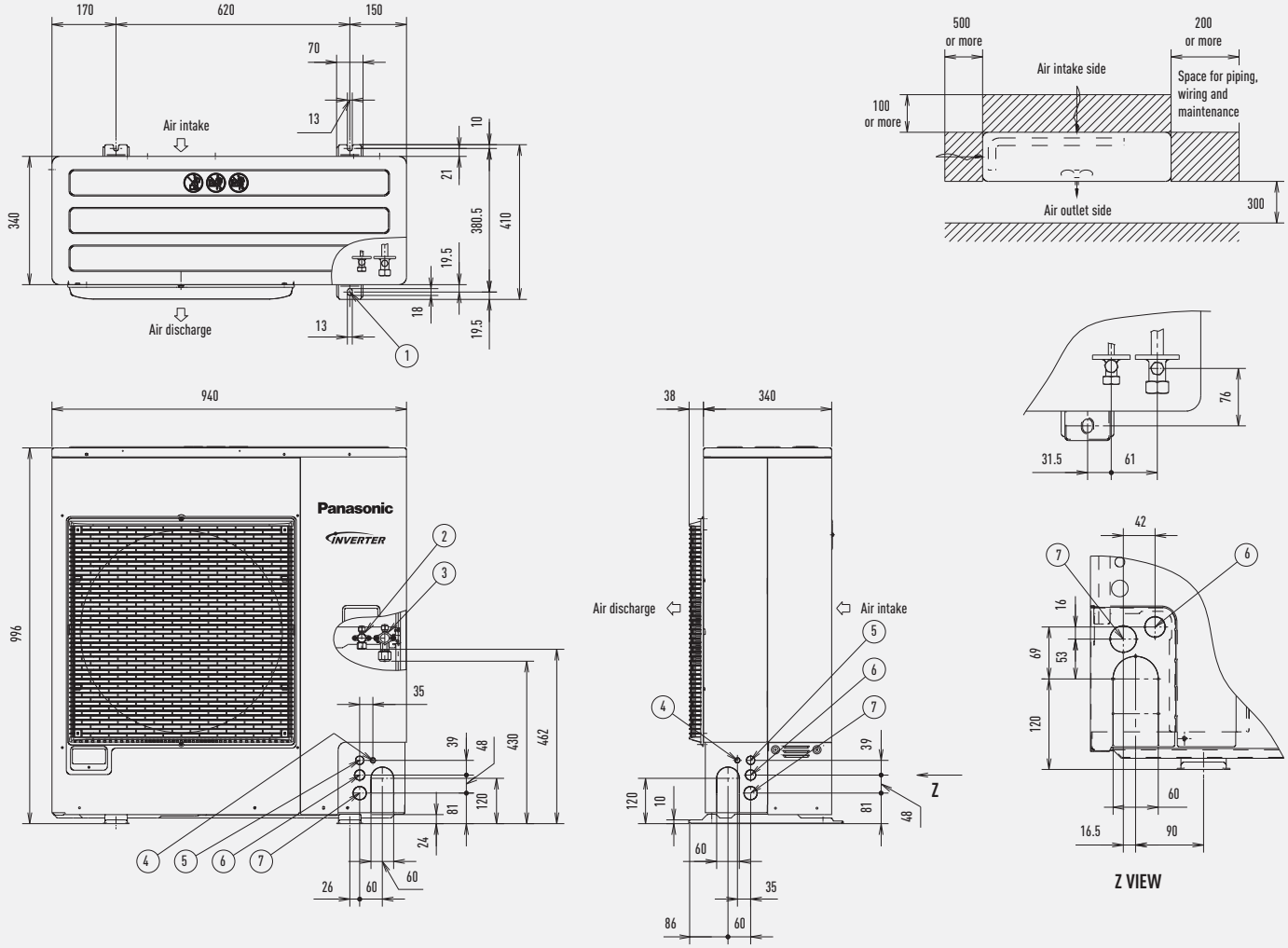

Dimensions: mm

1	Mounting hole (4-R6.5), anchor bolt	M10
2	Refrigerant piping (liquid pipe)	Ø 9,52 (flared)
3	Refrigerant piping (gas pipe)	Ø 15,88 (flared)
4	Electrical wiring port	Ø 13
5	Electrical wiring port	Ø 22
6	Electrical wiring port	Ø 27
7	Electrical wiring port	Ø 35

PACi Standard and Elite dimensions

Outdoor unit PACi Standard 14,0 kW and PACi Elite from 10,0 to 14,0 kW

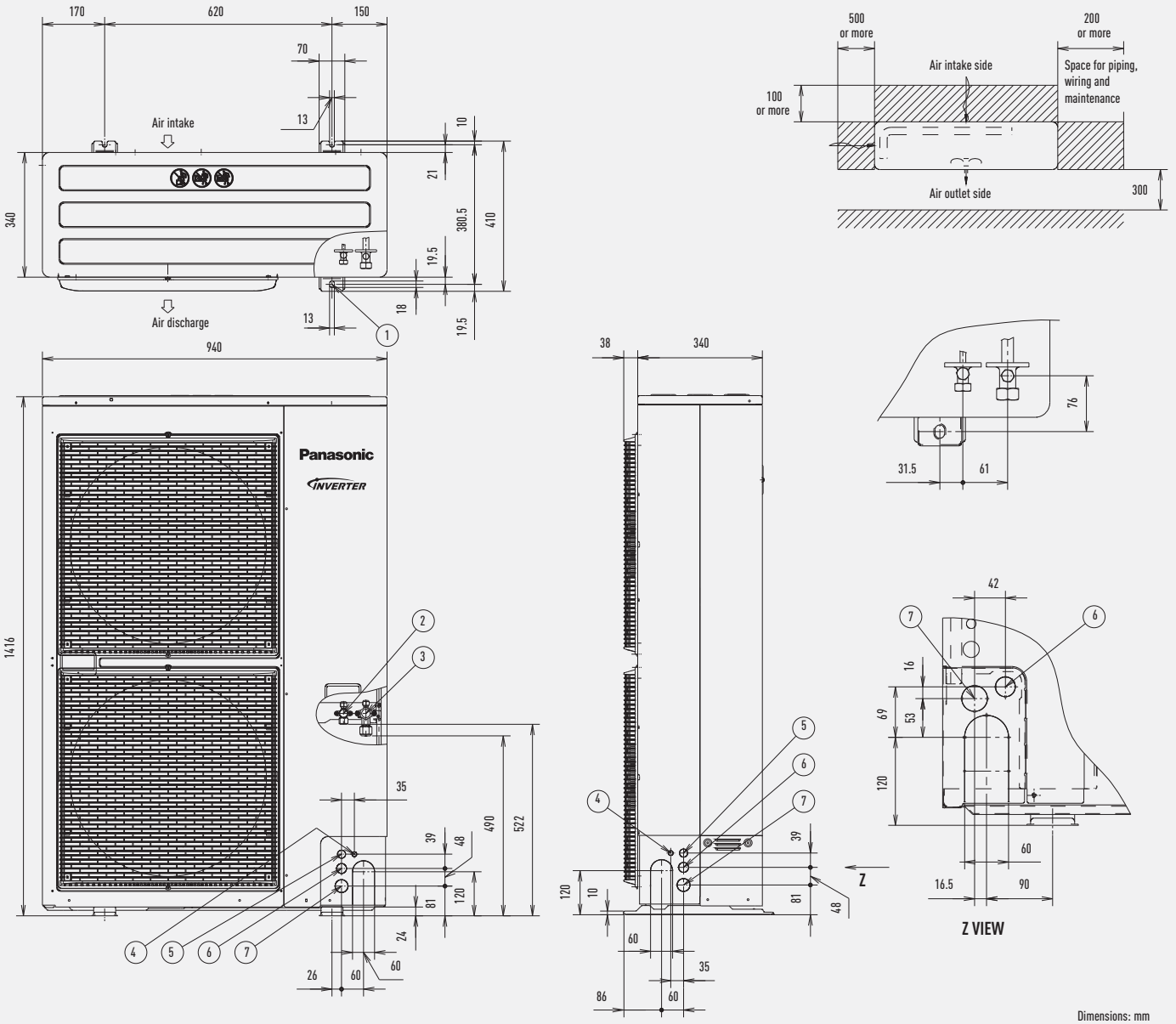

Dimensions: mm

1	Mounting hole (4-R6.5), anchor bolt	M10
2	Refrigerant piping (liquid pipe)	Ø 9,52 (flared)
3	Refrigerant piping (gas pipe)	Ø 15,88 (flared)
4	Electrical wiring port	Ø 13
5	Electrical wiring port	Ø 22
6	Electrical wiring port	Ø 27
7	Electrical wiring port	Ø 35

Outdoor unit Big PACi Elite 20,0 and 25,0 kW

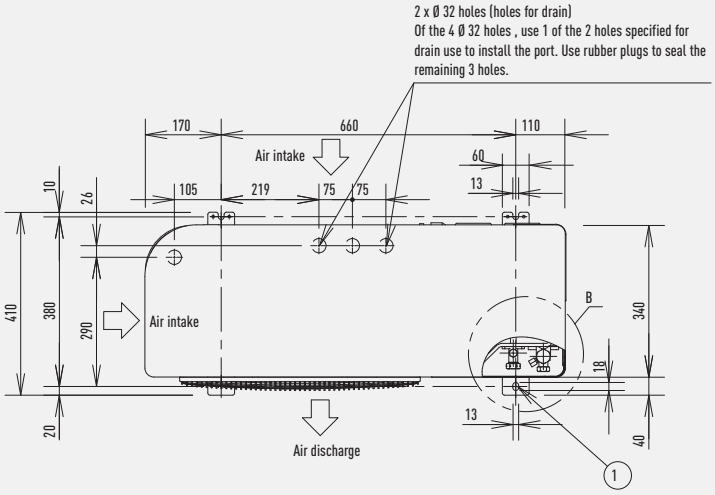

Type		20	25
1	Mounting hole (4-R6.5), anchor bolt	M10	
2	Refrigerant tubing (liquid tube)	Ø 9,52 (flared)	Ø 12,7 (flared)
3	Refrigerant tubing (gas tube)	Ø 19.05 (flared)	
4	Refrigerant tubing port		
5	Electrical wiring port	Ø 16	
6	Electrical wiring port	Ø 19	
7	Electrical wiring port	Ø 29	
8	Electrical wiring port	Ø 38	

Name	Figure	Q'ty
Reducing Joint Tube (Ø 19.05 ➡ Ø 25.4)	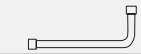	1
Joint Tube (Ø 19.05)		1

Remark: There are two types of supplied tubings. The one tubing port Ø 19.05 (flare process) is connected to the flared connection of the gas port side's service valve. The other "L" shaped tubing port is brazed in connection after cutting the tube at the proper length. Then make a brazing connection to the main tubing (Ø 25.4).

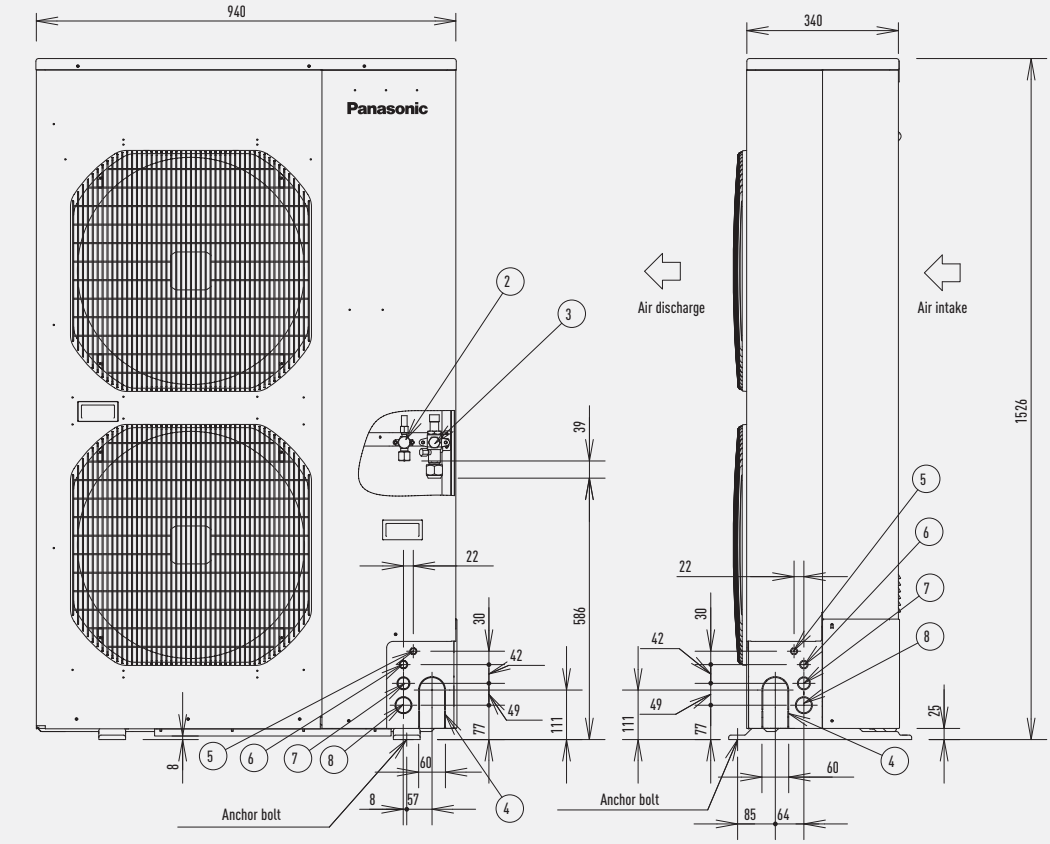

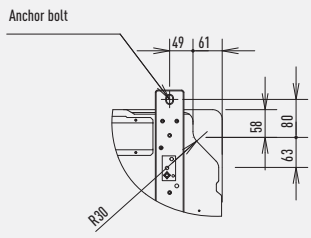

VIEW A
Bottom removable connection port

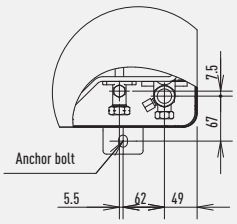

VIEW B
Refrigerant tubing connection port

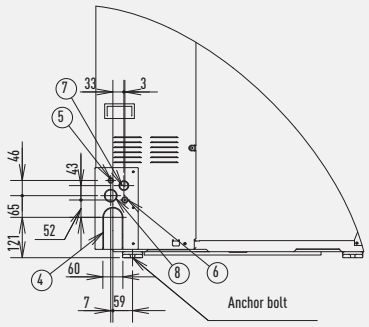

Dimensions: mm

Internet Control Ready
INTERNET CONTROL

Internet Control is a next generation system providing a user-friendly remote control of air conditioning or heat pump units from everywhere, using a simple Android or iOS smartphone, tablet or PC via internet.

Energy saving
INVERTER+

The Inverter range provides greater efficiency, more comfort, more precise temperature control, without highs and lows, and keeps the ambient temperature constant with lower energy consumption and a significant reduction in noise and vibration levels.

High savings
ECO G

GHP technology offers the best in energy efficiency.

Down to -25 ºC in heating mode
OUTDOOR TEMPERATURE

The ECOi system works in heating mode at outdoor temperatures down to -25°C (2-Pipe series) or -20°C (3-Pipe series and Mini ECOi).

Easy control by BMS
CONNECTIVITY

The communication port is integrated into the indoor unit and provides easy connection to, and control of, your Panasonic heat pump to your home or building management system.

Environmentally friendly refrigerant
R410A

R410A. Environmentally friendly refrigerant.

5 year compressor warranty

5 Years warranty.
We guarantee the compressors in the entire range for five years.



PANASONIC INDUSTRIAL VRF SYSTEMS

Professional solutions for all types of projects

The new Panasonic VRF system is specifically designed for energy saving, easy installation and high efficiency performance, with a wide choice of outdoor and indoor unit models and unique features which are designed for the most demanding offices and big buildings.



ECO i | ECO G | VENTILATION

ECOi VRF Systems

ECOi VRF Systems: 2-Pipe Mini ECOi 6 Series 2-Pipe ECOi 6N Series 3-Pipe ECOi MF2 6N Series.
ECOi electrical VRF is specifically designed for the most demanding offices and big buildings. High efficiency system. From 8 to 20 HP in only one chassis. Extended operating range to provide heating at outdoor temperature as low as -25 °C. Suitable for refurbishment projects. Example applications: Complexes. High Rise Buildings Commercial Buildings. Hotels.

ECO G VRF Systems

ECO G gas VRF is specially designed for buildings where the electricity is restricted or CO_2 emissions must be reduced. Very high primary energy efficiency ratio. Very low electrical consumption. Compatible with all ECOi indoor units and remote controls. Sanitary hot water is produced freely in summer and winter (outside temperature >7°C). Example applications: Complexes. High Rise Buildings. Commercial Buildings. Hotels.

Ventilation VRF Systems

Increase the efficiency of an installation with the use of AHU ventilation, a wide range of air curtains and energy recovery ventilation system.





Panasonic is definitely the most efficient system throughout the years

And highly adapted to retail, hotels and offices applications

1. Super high efficiency at part load conditions:

Comparison with competitors: When many others do not declare performance data under 50% part load, Panasonic covers up to 30% part load with extremely high efficiency.

Load %	110 %	100 %	60 %	50 %	40 %	30 %
Other competitors	3,52	3,38	3,45	3,50		
Panasonic VRF 6N Series 32HP Standard	3,38	3,41	4,41	4,69	4,85	4,93
Panasonic VRF 6N Series 32HP HI COP	3,91	3,94	5,14	5,54	6,03	6,51

Conditions: Outdoor temperature 0°C DB, Room temperature 20°C DB.

COP COMPARISON PANASONIC VS OTHER COMPETITORS AT DIFFERENT LOAD

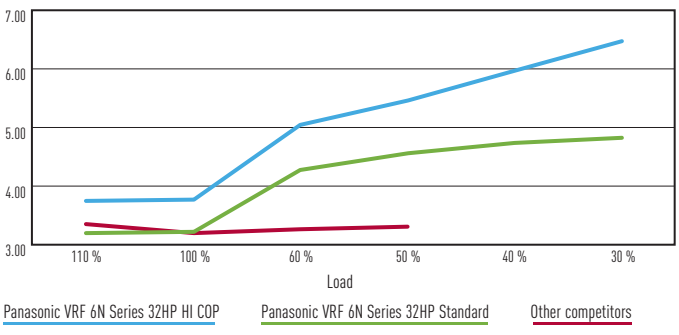

Conditions: Outdoor temperature 0°C DB, Room temperature 20°C DB. Data extracted by Panasonic and competitor official technical data book.

2. Excellent ESEER and SCOP values for 2 and 3-Pipe

Panasonic have a extremely high ESEER and SCOP values following the SBEM method (some other manufacturers may use another non official calculation method).

Mini ECOi		
Model	ESEER	SCOP
U-4LE1E5	5,77	5,43
U-4LE1E8	5,76	5,43
U-5LE1E5	5,88	5,12
U-5LE1E8	5,88	5,12
U-6LE1E5	5,20	4,86
U-6LE1E8	5,29	4,86

2-Pipe		
Model	ESEER	SCOP
U-8ME1E81	6,77	5,83
U-10ME1E81	6,40	5,33
U-12ME1E81	6,05	4,69
U-14ME1E81	6,09	5,11
U-16ME1E81	5,70	4,73
U-18ME1E81	6,08	5,09
U-20ME1E81	5,87	4,94

3-Pipe		
Model	ESEER	SCOP
U-8MF2E8	5,89	5,74
U-10MF2E8	5,96	5,40
U-12MF2E8	6,15	5,25
U-14MF2E8	5,87	5,63
U-16MF2E8	6,04	4,88

Developed by BRE, SBEM (Simplified Building Energy Model) is the basis of non-domestic building energy calculations. Based on the National calculation method (NCM), it is used to determine compliance with Part L of the Building Regulations and is also used to provide Energy Performance Certification.

Non-Domestic Building Services Compliance Guide provides information on various aspects of the calculation method, including those of Heat Pumps (Section 3), and Comfort Cooling (Section 9).

SCOP - Seasonal Coefficient of Performance				
Part Load COP	25%	50%	75%	100%
Ambient conditions	15°C	7°C	1°C	-5°C
Weighting factor	0,20 (a)	0,36 (b)	0,32 (c)	0,12 (d)

UK winter -5°C DB (outdoor temperature), 20°C WB (indoor temperature)

SEER - Seasonal Energy Efficiency Rating				
Part Load COP	25%	50%	75%	100%
Ambient conditions	20°C	25°C	30°C	35°C
Weighting factor	0,20 (a)	0,36 (b)	0,32 (c)	0,12 (d)

UK summer 21°C DB (outdoor temperature), 16°C WB (indoor temperature)

ESEER calculation corresponds with below conditions and power input of indoor units is not included.

- Indoor temperature: 27°C DB / 19°C WB
- Outdoor temperature conditions

Part load ratio	25%	50%	75%	100%
Outdoor air temperature (°C DB)	20	25	30	35
Weighting coefficients	0,23	0,41	0,33	0,03

- Formula : 0,23 x $EER_{25\%}$ + 0,41 x $EER_{50\%}$ + 0,33 x $EER_{75\%}$ + 0,03 x $EER_{100\%}$.

3. Efficient defrost operation

Panasonic use the second unit to defrost the first unit. This makes the system more efficient during defrost and does not affect comfort.

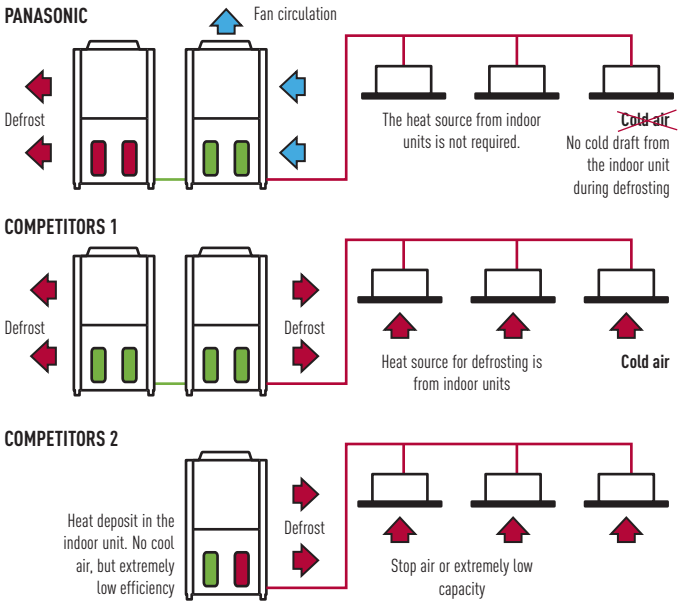

4. Panasonic ECOi operates up to -25°C. This unique feature demonstrate the supremacy of Panasonic ECOi 6N Series

Panasonic use the second unit to defrost the first unit. This makes the system more efficient during defrost and does not affect the comfort.

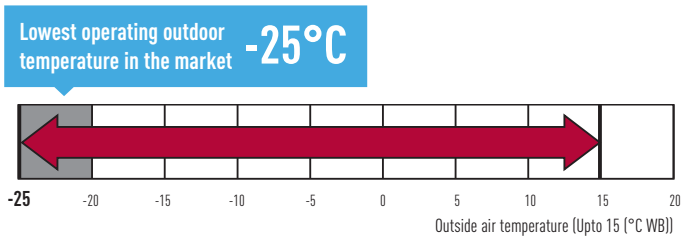

Wide temperature setting range.

5. The system will still operate up to 25% of the connected indoor units

System will not stop when up to 25% of indoor units have power supply breakdown when they are ON Mode.

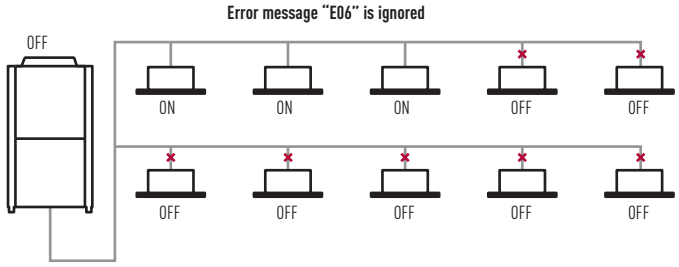

6. High safety operation in case of breakdown! Ensures heating and cooling

AUTOMATIC BACK-UP OPERATION

It is possible for the system to keep working, even if the compressors, fan motor and the temperature sensor are damaged (even when compressor fails in single unit with 2 or more compressor inside).

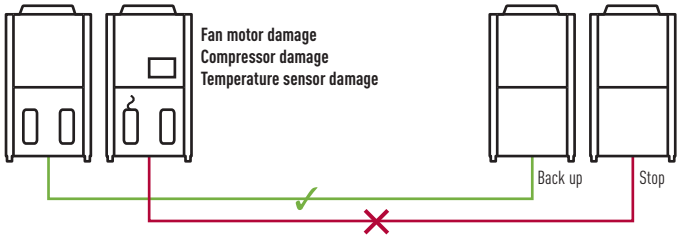

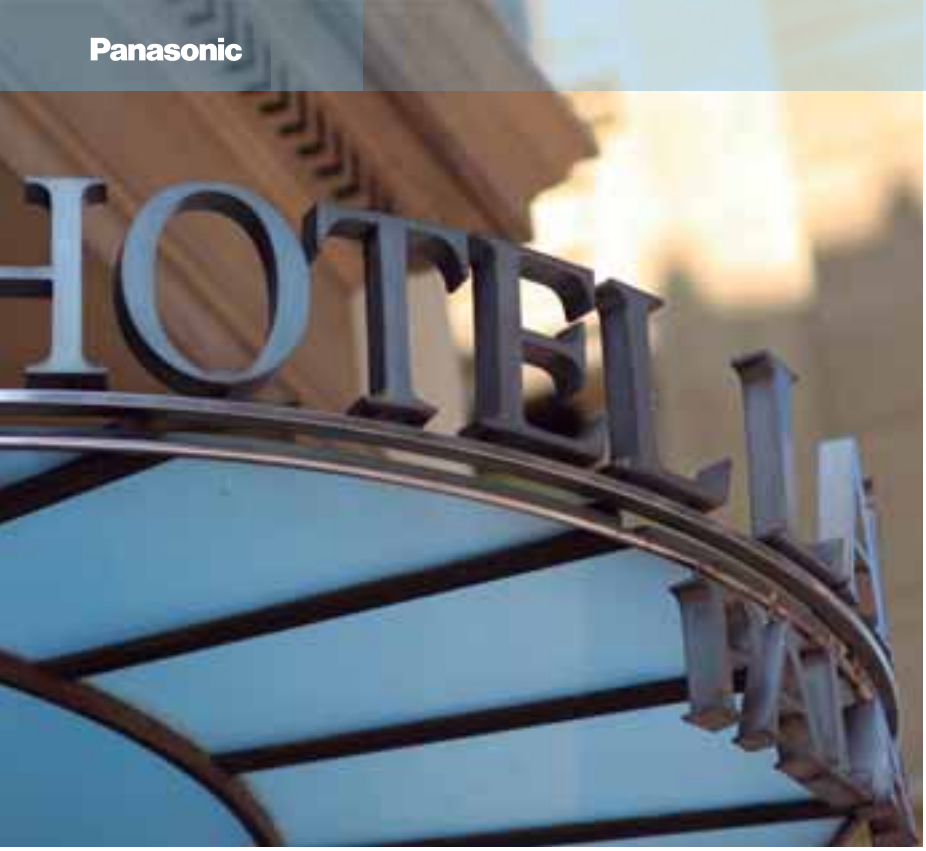

Your entire hotel with maximum savings, maximum control and maximum comfort

Panasonic helps your entire hotel achieve maximum savings, maximum control and maximum comfort. Panasonic offers the widest range in HVAC, DHW and ventilation available. That enables us to offer the most suitable solution to ANY project. And this all with the peace of mind provided by a fast customer service which is available 24 hours a day, 365 days a year.
The energy savings provided by our solutions, plus the available choice between electricity and gas, will enable you to reduce your CO_2 emissions.
Panasonic solutions not only ensure a higher customer satisfaction but also the peace of mind that the wide Panasonic experience brings about in this field, plus a lower energy bill.



Hydronic units
For obtaining hot and cold water for heating and refrigeration (Aquarea Air radiators, underfloor heating, radiators...)

Domestic Hot Water production
DHW with Aquarea or ECO G.



AHU Kit
Increase the efficiency of an installation with the use of AHU ventilation, a wide range of air curtains and energy recovery ventilation system.

1 **Hibride Solution**
Gas + Electric: When high quantity of hot cold water is needed.
- ECO G (Gas heat pump)
- Water heat exchanger
- Aquarea HT to produce hot water up to 65°C
- Air Handling Unit kit to connect the ECO G to the Air Handling Unit
- PKEA wall mounted to cool the server rooms efficiently

2 **Full Electric Solution 2 and 3 way.** When flexibility is needed and electricity power availability is not issue.
- ECOi (Electric VRF)
- Direct expansion indoor units
- Air Handling unit kit to connect the ECOi to the Air Handling unit
- PKEA wall mounted to cool the server rooms efficiently
- New Panasonic Pump Down System: Detect refrigerant leakage and activate pump down solution.

Additional available space
Due to the modularity applied to our systems, our customers have freed space for public use: Terraces, swimming pools, meeting rooms, parkings.

Cutoff valves
When there are plans for future expansion, the installation can be built using the units sized for future expansion requirements.



Wide range of indoor units
Complete range of indoor units that fits any need. All units provided with supply air temperature sensor and low operation sound level to warranty maximum guests comfort. From 1,5kW up to 30kW.



Control your way
Wide variety of controls, from simply user control to remotely full system control. Touch panel, web server, consumption control, smartphone control... everything is possible.

Maximum savings on hot water production
Hot water for swimming pool, spa and laundry for free thanks to the residual heat generated by the ECO G units.

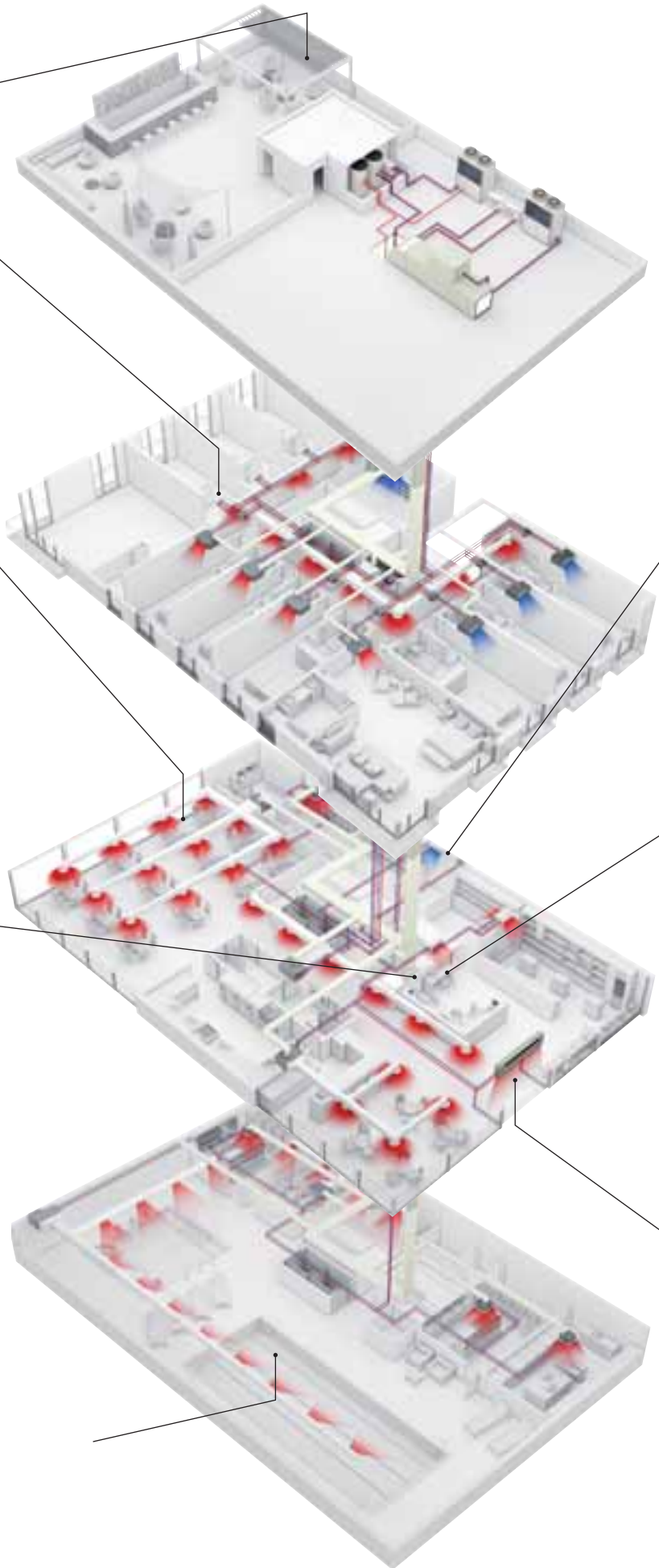



PKEA indoor unit for server room
Steady cooling, nonstop, even at -20°C and still with high efficiency. Ready for continuous operation and easily to connect 2 systems to automatically alternate and smartly keep cooling server room with maximum warranties.



Protocol friendly
Great flexibility for integration into your KNX / EnOcean / Modbus / LonWorks / BACnet projects allows fully bi-directional monitoring and control of all the functioning parameters. Range of solutions to control locally or remotely the full system in bi-directional.



Air Curtain with DX Coil
The Panasonic range of air curtains is designed for smooth operation and efficient performance.



New innovative solutions for retail

Heating and cooling solutions for retail applications

Panasonic has developed solutions for retail applications and offices applications where return on investment is a key factor! The comfort inside the shop is key for a good customer experience in the shop.
From local control or from Panasonic new cloud control system, a detail status of the heating and cooling system can be displayed, analysed and optimized in order to improve the efficiency, reduce the running time and increase the life time of the units.

Control your business, wherever you are, 24h/7

NEW

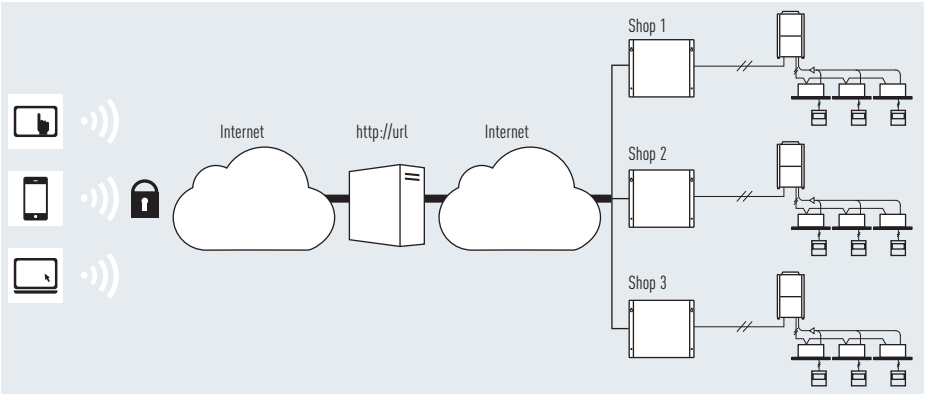

The new Cloud system from Panasonic allows you to have complete control of your installations from wherever you are, from your smartphone or from your computer. In a simple click, all the units from several locations, get inform in real time of the status of all your installations, prevent breakdowns and optimize the costs.

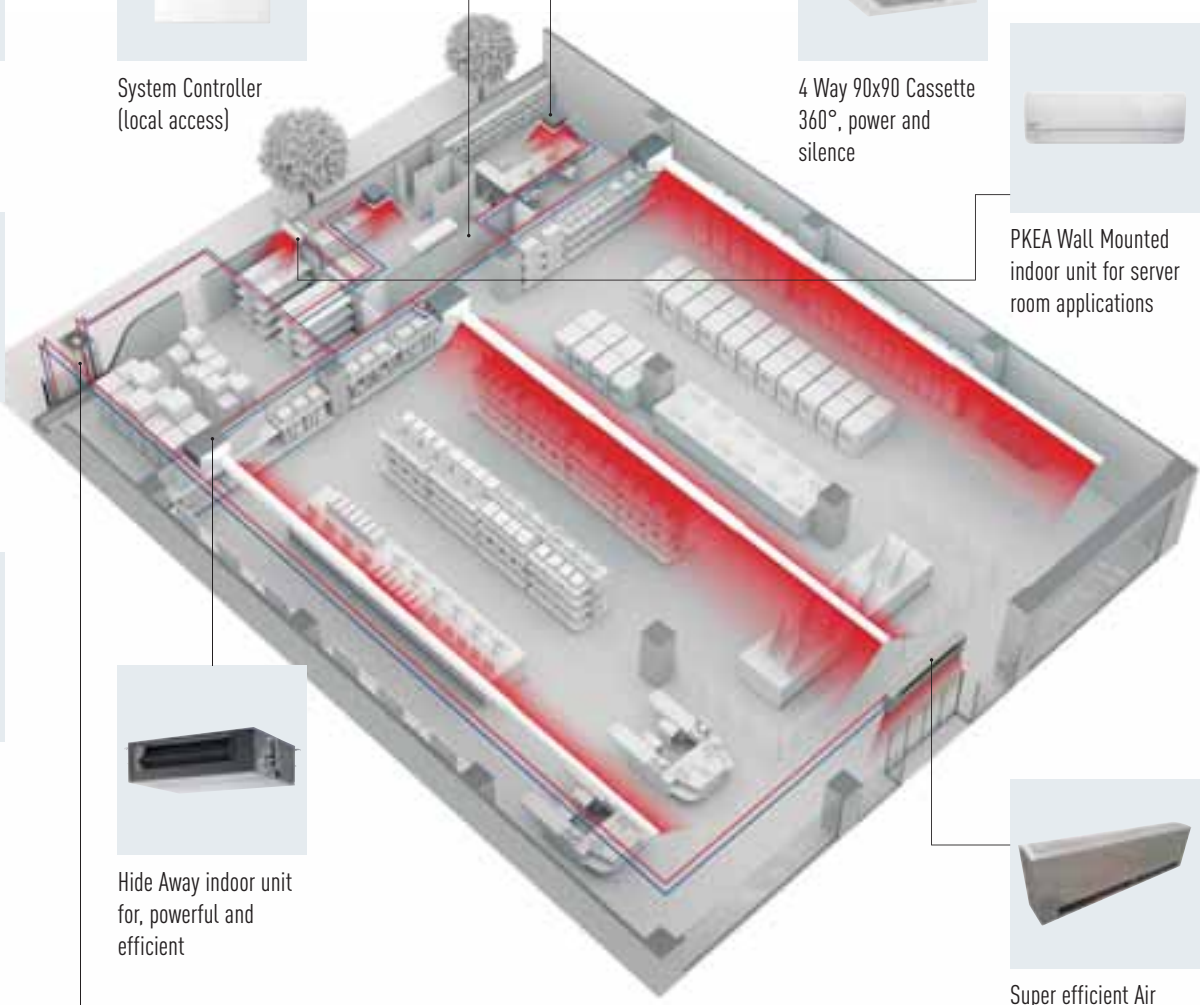



Web Interface Device (remote access from internet)



System Controller (local access)



4 Way 90x90 Cassette 360°, power and silence

PKEA Wall Mounted indoor unit for server room applications



Air Handling unit kit connected to the ECOi and PACi system.



Energy Recovery unit connected to the ECOi system for high efficiency of the system

Hide Away indoor unit for, powerful and efficient

Super efficient Air Curtain with DX Coil, connected to the ECOi or PACi system

Multi energy solutions, gas or electrical



Gas VRF	Electrical VRF		Electrical 1x1	Electrical A2W
ECO G	ECOi	Mini ECOi	PACi	Aquarea

The Multi energy solution (Gas and Electric) from Panasonic to gives the best of the energy saving and on the flexibility of the installation. Panasonic solutions can be connect to direct expansion systems, water chiller installations and ventilation systems as air handling units.





New wired remote controller with Econavi function control

Easy to use, attractive, clear design, with new demand control functions and energy consumption display! This useful feature makes this remote control unique!

Design
The new CZ-RTC3 wired remote control is ideal for integration into the most demanding interior architectures.
The touch panel features a very sleek and easy to use display, which with its compact display is only 120mm x 120mm x 16mm.

Display of information
The information is mainly based on pictograms to ensure easy understanding.
The minimal amount of text is available in 4 languages (English / German / French / Spanish / Italian).
The screen is back lit to enable reading even during the night.

Easy Access to the menus
With the new pictograms, the navigation, the selection and the settings are simple and easy to follow.

Key Functions
- Easy setup of the timer and settings of the indoor unit
- Limitation of the energy consumption (Demand control) by timer.

Basic function (Operation display & indication)

All functions are easily available on the remote controll.
• OFF/ON timer • Weekly timer • Quiet operation • Remote control sensor • Operation prohibit • Filter sign • Energy saving • Centralized control indication • Mode change prohibit • Automatic temperature return • Temperature range limitation • OFF remind • Schedule demand control • Ventilation • Out Function

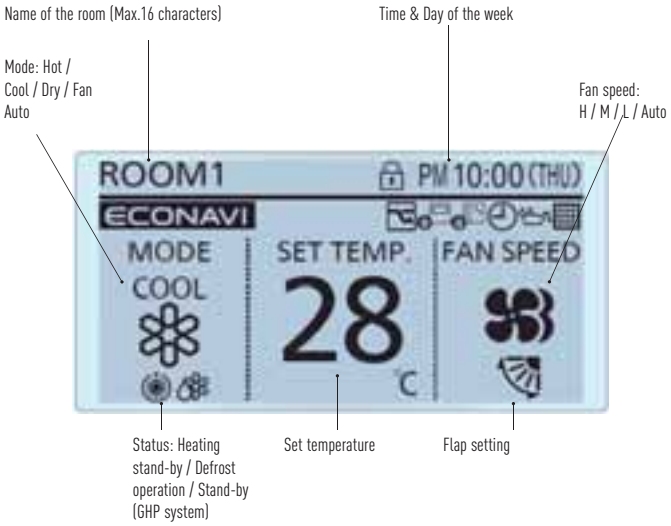

Easy operation and quick access to all menus

1. Set temperature will be selected, when any arrow button is touched.
2. Select the item (Mode or Fan speed) by left/right ◄► key.
3. Change the setting by up/down ▲▼ key.

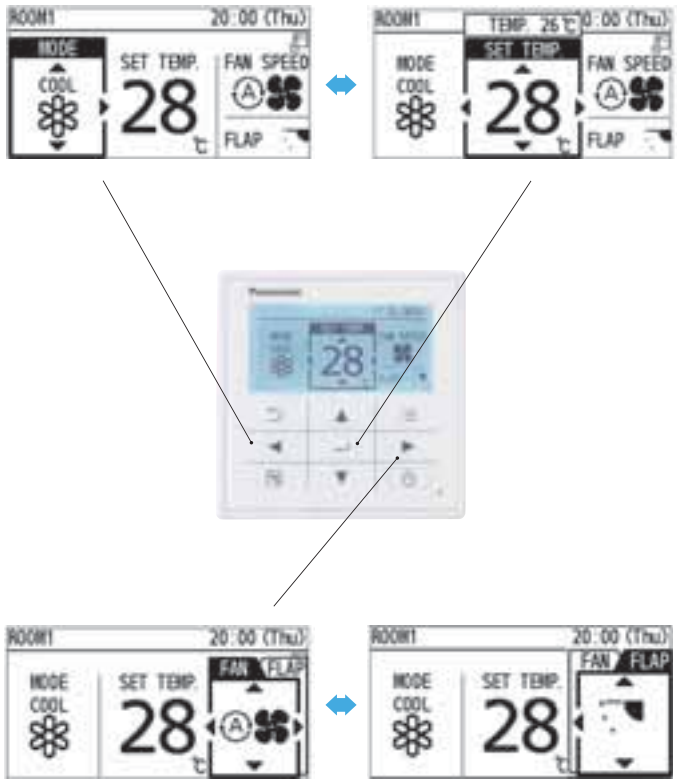

Example of easy access to the functions: Air direction setting

1. Select "Air direction" and press "determine" key.
2. Select the unit No. by up/down key.
3. Select the flap position by up/down key.
4. Press "Return" key to go back the Menu display.

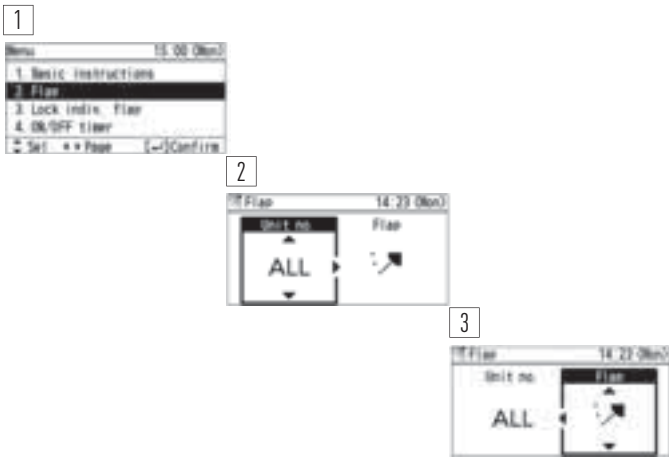

Example of easy access to the functions : Weekly timer setting

8 actions available per day. Total 56 actions per week can be set.
1. Weekly timer menu display
2. Setting for each day of the week
3. Timer program setting of the day

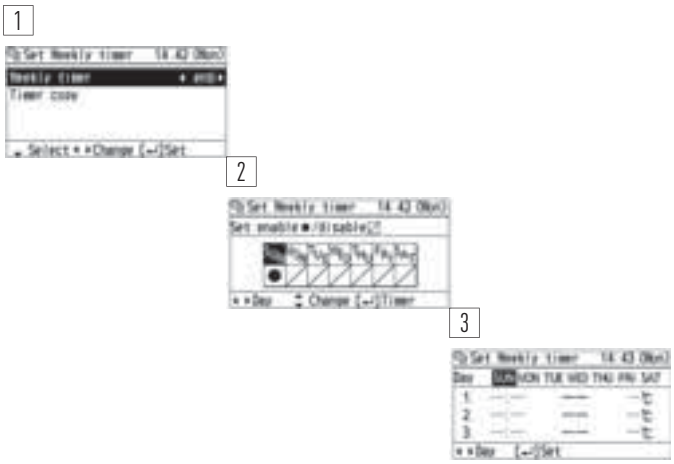

Functions available on the CZ-RTC3

Control item	Controllability	
		All VRF
Basic Operation	Operation, Mode, Temperature setting, Airflow volume, Airflow direction	✔
Timer function	Time display	✔
	Easy ON/OFF timer	✔
	Weekly Program timer	✔
Maintenance	System failure information	–
	Service contact registration	✔
	Filter sign (rest time display) & Reset	✔
	Auto-address, Test run	✔
	Sensor value monitor	✔
	Simple/Detail setting mode	✔
Others	Key lock	✔
	Ventilation fan control	✔
	Display contrast adjustment	✔
	Remote controller sensor	✔
	Quiet operation mode	–
	Prohibit setting control from Central controller	✔

All specifications subject to change without notice.



Wired remote controller CZ-RTC3
with Econavi Sensor Control

Up to 28% energy savings (cooling)
ECONAVI



New Econavi Sensor

The all new Econavi Sensor detects presence in the room, and quietly adapts the PACi or VRF air conditioning system in order to improve comfort and maximise energy savings.

- Detects human activity and adjusts temperature by 2 degrees (up or down) to optimize comfort and efficiency
- If there is no activity detected for a set time, the Econavi will stop the unit or move to a new temperature previously set
- The Econavi device is installed independently of the indoor unit, and is located in the area best suited for detection



INCREASE EFFICIENCY BY 28%

INCREASE COMFORT

Human activity and presence detection

Activity detection		Presence detection	
HIGHER ACTIVITY	LOWER ACTIVITY	After 20 mins absence	After 3 hours absence
Cooling Set Temp. +/-0°C	Cooling Set Temp. +1°C	Cooling Set Temp. +2°C	Cooling Thermo OFF
Heating Set Temp. -1°C	Heating Set Temp. +/-0 °C	Heating Set Temp. -2°C	Heating Thermo OFF
	Each 2 min	After 3 hours set up can be change to stop or temp shift	





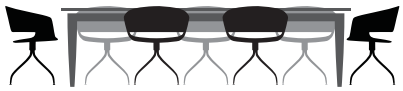

Applications

Saving Energy for Offices: if the air conditioning is left on after the last employee leaves the office, Econavi will automatically react, reducing or stopping the system.
Increased comfort in hotel rooms: when presence is detected in the room, the temperature is automatically adjusted to achieve best comfort.

Econavi function

- Analyses room activity: Human activities and human heat
- Modifies the capacity to adapt in real-time to the needs of the room

Key points

- Compatible with Cassette, Wall Mounted, Hide Away and Ceiling
- Improves efficiency
- Better Comfort
- Can be installed in the best place of the room for detection purposes

Available in October 2014.



Sensor location image

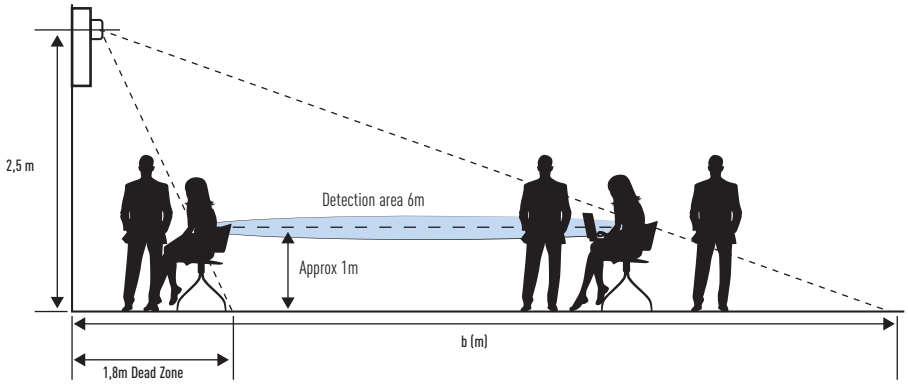

Human detection area (2,5m height angle 30°)

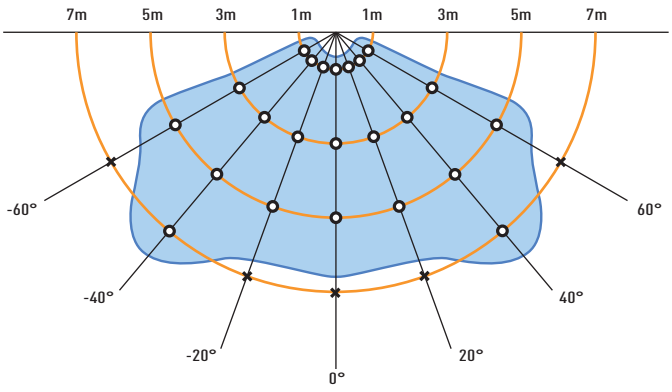



New Panasonic Pump Down System

Improving security, detect refrigerant leaks early!

Panasonic has developed two innovative solutions to detect refrigerant leaks that offer complete assurance and protection for end users, building occupiers and the environment.

Panasonic's innovative Pump Down Systems help buildings equipped with this system qualify for additional BREEAM points and help to achieve compliance with current EN378 2008 standard, where refrigeration concentration levels exceed practical safety limits of 0,44 kg/m^3.

No additional communication network is needed to connect the sensors to Pump Down System

Option 1: With Leak detector: the safest solution for small rooms

Thanks to the exclusive software of Panasonic ECOi the sensors communicate with Pump Down System directly through P-Link connection. Very cost effective solution, very easy installation. The leak detector is connected through PAW-EXCT connector directly to the indoor unit and the pump down system is directly connected to the main outdoor unit. The pump down system will activate when a leak is detected in the rooms. Refrigerant collection will be immediate. Offering the best of safety for the end users, building occupiers and the environment. All the refrigerant will be collected in the outdoor units and for bigger systems in an optional receiver tank.

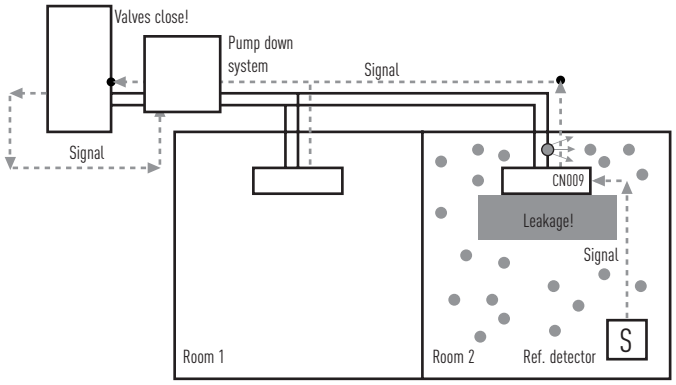

Option 2: Unique innovative algorithm to determine refrigerant leakage

Panasonic has developed a new innovative algorithm which is able to detect leakage of R410A based on the following conditions:
- High pressure
- Low pressure
- Discharge temperature

This solution is ideal for hotels, offices and public buildings where safety of the end users, building occupiers are a must!
This solution is extremely cost effective as does not need expensive leakage sensor.



Pump down system

This innovative pump down system can be connected in two ways:
- With sensor leakage
- Without sensor leakage, using only the innovative algorithme.

Basic pump down function:
- Detect the leakage
- Activate pump down process
- Collect the gas on the tank
- Close the valves to isolate the gas

Key points:
- Comply with legislation
- Protect personnel
- Protect the environment
- Save on operating costs

Pump Down system in case of leakage

Number of outdoor units	2-Pipe without receiver	2-Pipe with receiver	3-Pipe without receiver	3-Pipe with receiver
1	✔	✔	✔	✔
2	✔	✔	✔	✔
3	✔	✔	✔	✔



Energy saving

INVERTER+

ECO i

Best efficiency ECOi series from Panasonic

Lower running and life cycle costs

Panasonic ECOi 6N systems are amongst the most efficient VRF systems on the market, offering COPs in excess of 4.0 at full load conditions. The system is also designed to make sure that we reduce the running cost of each system by using our unique road map control routine to ensure that the most efficient combination of compressors are running at any one time. Improved defrost sequencing also reduces running costs by defrosting each outdoor coil in turn when conditions allow.

The range of outdoor unit modules consists of 7 models from 8 HP to 20 HP. The module sizes from 14 HP to 20 HP can be configured for HI-COP.

Standard mode offers the highest capacity while still delivering excellent efficiency, while HI-COP mode delivers exceptional efficiency and low running costs with a slight reduction in capacity.

Up to 64 indoor units can be connected up to a capacity of 200% indexed indoor unit loads, enabling the system to be used effectively on highly diversified building loads: this large connectability feature makes it an easy-to-design solution for schools, hotels, hospitals and other large buildings. Up to 1,000 m in pipe length enables the New VRF ECOi 6N series to be used in very large buildings, with maximum design flexibility.

The ECOi 6N system is also easy to control. It has more than 8 types of control from standard wired remote controls to touch screen panels or web access interfaces.

DC-inverter control technology for rapid and powerful cooling & heating.

The ever-evolving Panasonic ECOi 6N series

The ECOi 6N series is designed for energy savings, easy installation, and high efficiency. Always continuing to evolve, Panasonic uses advanced technologies to meet the requirements of diverse situations and contribute to the creation of comfortable living spaces.

Mini ECOi 6 Series

Panasonic's policy of product development continues with the expansion of the Mini ECOi 6 Series, the 2-Pipe heat pump small VRF system specifically designed for the European market.

2-Pipe ECOi 6N Series

The 2-Pipe ECOi 6N series is specifically designed for energy saving, easy installation and high efficiency performance as its main focus.

3-Pipe ECOi MF2 6N Series

ECOi 3-Pipe is one of the most advanced VRF systems available. Not only offering high-efficiency and performance for simultaneous heating and cooling, its sophisticated design makes installation and maintenance much easier.



ECOi 6N Series benefits

Ease of installation

R410A has a higher operating pressure with a lower pressure loss than previous refrigerants. This enables smaller pipe sizes to be used and allows reduced refrigerant charges.

Simple to design

Panasonic recognise that designing, selecting and preparing a professional VRF quotation can be a time consuming and costly process, especially as it is often also a speculative exercise. So we have designed proprietary software which is quick and easy to use and produces a full schematic layout of pipework and controls, as well as a full materials list and performance data.

Easy to control

A wide variety of control options are available to ensure that the ECOi 6N system provides the user with the degree of control that they desire, from simple room controllers through to state of the art BMS controls.

Simple to commission

Simple set-up procedure including automatic addressing of connected indoor units. Configuration settings can be made from an outdoor unit or via a remote controller.

Accurate capacity control

To ensure that the compressor capacity is matched to building load as accurately and efficiently as possible, Panasonic has designed its range of 2 and 3-Pipe ECOi systems to operate with DC inverter and high-efficiency fixed speed compressors. The system selects the most efficient compressor to operate by dynamically monitoring the building load and choosing the best compressor combination to run.

Easy to position

The compact design of the ECOi 6N outdoor units means that sizes 8 HP to 12 HP fit into a standard lift and are easy to handle and position when on site. The small footprint and modular appearance of the units ensure a cohesive appearance to an installation.

Off-coil temperature control

Panasonic ducted units offer the unique advantage of being able to offer OFF coil temperature control as standard. This allows designers to select units using an OFF coil temperature between 2°C and 22°C. This allows room environments to be cooled without subjecting its occupants to cold drafts or uncomfortable conditions. This is achieved without any extra controls or wiring to each unit.

Wide selection and connectability

With 11 indoor model styles available, ECOi 6N systems are the ideal choice for multiple small capacity indoor unit installations, with the ability to connect up to 40 indoor units to systems of 24 HP or greater for 3-Pipe ECOi MF2 6N Series.

Easy to maintain

Each system allows the use of prognostic and diagnostic controls routines, from refrigerant charge control through to complex fault code diagnostics, all designed to reduce the speed of maintenance calls and unit down time.

Lower running and life cycle costs

Panasonic ECOi 6N systems are amongst the most efficient VRF systems on the market. The system is also designed to make sure that we reduce the running cost of each system by using our unique road map control routine to ensure that the most efficient combination of compressors are running at any one time. Improved defrost sequencing also reduces running costs by defrosting each outdoor coil in turn when conditions allow.

ECOi 6N 2-Pipe with Water Heat Exchanger for chilled and hot water production

For hydronic applications.







2-Pipe Mini ECOi LE1 Series

Cooling and Heating type Single Phase
Cooling and Heating type Three Phase

For small-scale commercial and residential use

Panasonic 2-Pipe Mini ECOi, the 2-pipe heat pump is specifically designed for the most demanding applications. Mini ECOi is available in 3 sizes with cooling capacities ranging from 12.1 kW to 15.5 kW and connectable up to 9 indoor units (applicable for 15.5 kW).
An expansion from the Panasonic VRF line up, the Mini ECOi is compatible with the same indoor units and controls as the rest of the ECOi range.

Energy saving
INVERTER+
Environmentally friendly refrigerant
R410A
Down to -20 °C in heating mode
OUTDOOR TEMPERATURE
5 year compressor warranty



Energy saving concept

The energy saving designs for the structure of fans, fan motors, compressors and heat exchangers has resulted in high COP values, which rank as one of the top classed in the industry. In addition, use of highly efficient R410A refrigerant reduces CO_2 emission and lowers operating costs.

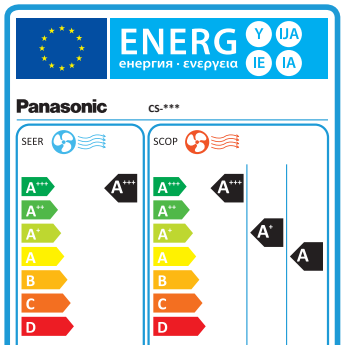

All Mini ECOi VRF systems are rated as EEL Category A, which confirms that they are amongst the most energy efficient systems available. Power consumption during operation is substantially less than that of lower rated units and consequently both the day to day running costs and full life cycle costs are significantly reduced.

Improved energy saving

The operation efficiency has been improved using highly efficient R410A refrigerant, new DC inverter compressor, new DC motor and new design of heat exchanger.

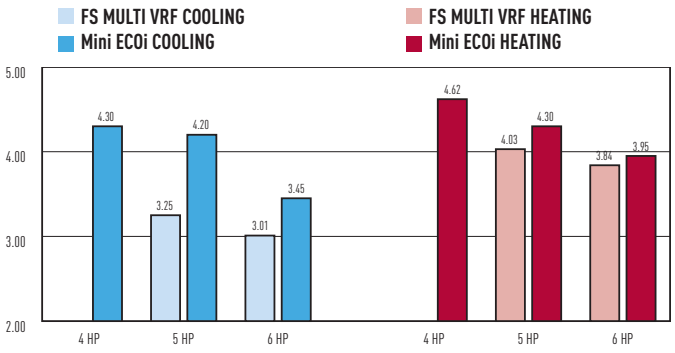

2-Pipe Mini ECOi LE1 Series

Drastically reduced sound level

The pressure sound level has been reduced drastically thanks to the new DC Inverter compressor, newly designed heat exchanger and Fan.

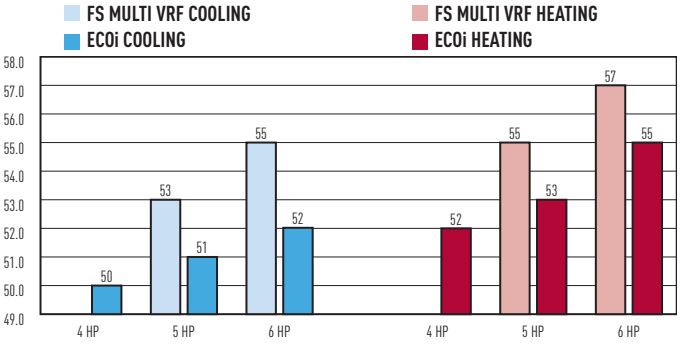

Wide operating range

The operating range for heating operation is to -20°C, the cooling range is to -10°C. The remote controller temperature setting offers a range from 16°C to 30°C.

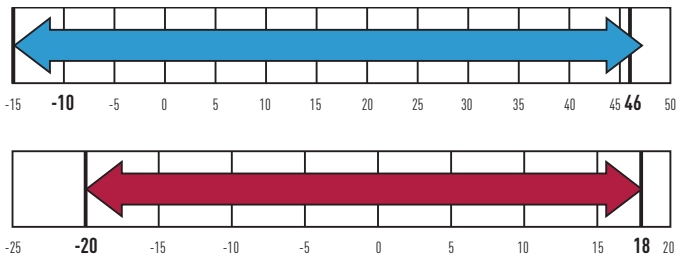

Cooling: -10°C DB ~ 46°C DB // Heating: -20~18 (WB)

Lightweight

In case of 5/6 HP, the weight has been reduced from 123 kg into 104 kg.

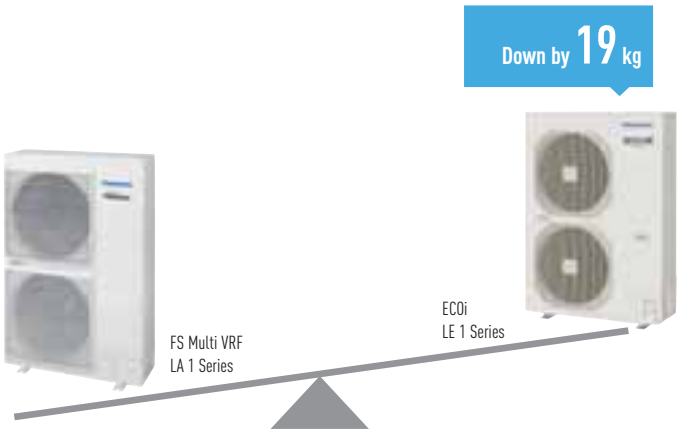

Increased piping length for Greater design flexibility

Adaptable to various building types and sizes.
Actual piping length: 120 m (equivalent piping length 140 m).
Maximum piping length: 150 m.

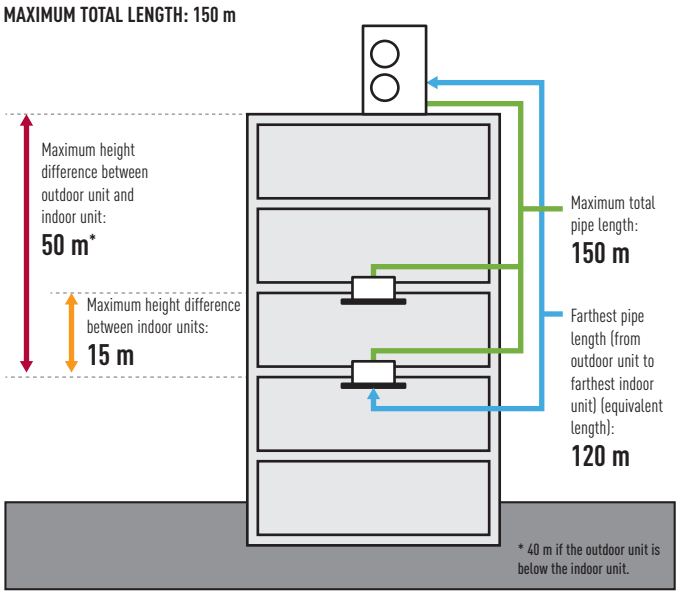

Silent mode

3 dB can be reduced by setting. External input signal is also available.

Up to 9 indoor units per system

System / HP	4 HP	5 HP	6 HP
Connectable Indoor Unit	6	8	9

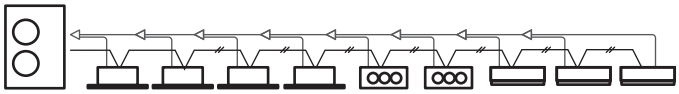

Compact & Flexibility-design

The slim and lightweight design can be installed in various small spaces.

FOR BALCONIES

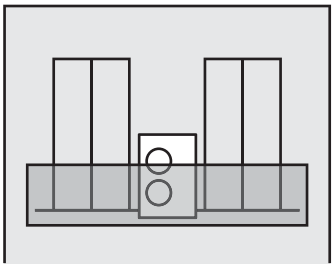

FOR NARROW SPACES

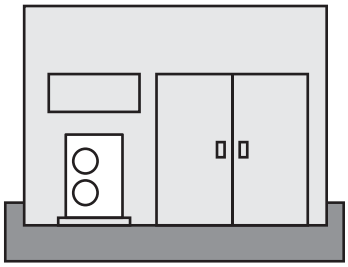

Mini ECOi

1 Inverter compressor. Large-capacity inverter compressor has been adopted. The inverter compressor is superior in performance with improved partial-load capacity.
2 Printed Circuit Board. PCBs have been reduced to two, to improve maintenance.
3 Accumulator. Larger accumulator has been adopted to maintain compressor reliability and because of the increased refrigerant quantity, extended maximum piping length can be achieved. Furthermore, the refrigerant pressure loss was reduced, which contributes to an improved operating efficiency.
4 DC Fan motor. Checking load and outside temperature, the DC motor is controlled for optimum air volume.
5 Newly designed Big Edgy Fan. The newly designed Fan edge has been realized to inhibit air turbulent and to increase efficiency. As Fan diameter has been sized up to 490mm, the air volume has been increased by 12% keeping low sound level.
6 Heat exchanger & copper tubes. The heat exchanger size and the copper tube sizes in the heat exchanger has been redesigned to increase efficiency.
7 Oil separator. New centrifugal separator has been adopted to improve oil separation efficiency and reduce refrigerant pressure loss.



Demand control Kit information

		Mini ECOi	ECOi 6N	ECO G	PACi
CZ-CAPDC2	Seri-Para I/O unit for outdoor unit	Yes	Yes	Yes	Yes
CZ-CAPDC3	Demand Control Kit	Yes	Yes	Yes	Yes

Function of Demand control

This function limits the maximum operating input at peak time.
3 levels as 100%/70%/0% is set at the factory[1].
The limit value setting for level 1 & 2 can be changed from 40% ~ 100% by 5% at the system commitioning.

1. The 3rd level is available only for CZ-CAPDC3 & CZ-CAPDC4.)

	Power input level (vs. rated condition)	
Level 1	100% (at ship)	From 40%-100% setting can be changed (by 5% step)
Level 2	70% (at ship)	
Level 3	0% (Forcible thermo-OFF)	

OPERATING IMAGE

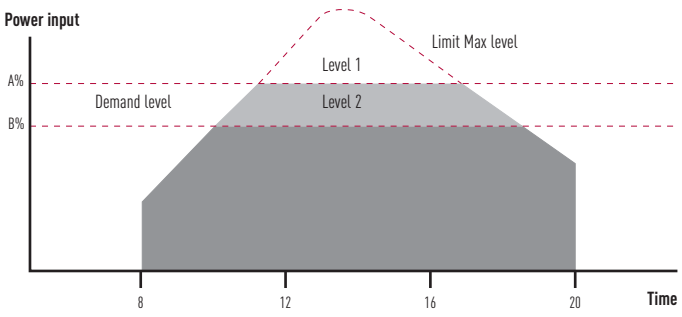

CZ-CAPDC2

Demand control input signals sent to this outdoor interface will be transferred to the system via inter-unit control wiring. Other controls (ex. Operation ON/OFF, Mode switch Cool/Heat) are also available. Demand level 1 & 2 are available. Up to 4 systems can be connected and controlled independently or all together by one interface.

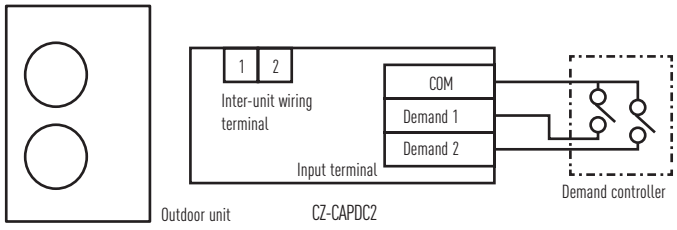

CZ-CAPDC3 for PACi and Mini ECOi

Optional terminal block kit for demand control to be mounted in the outdoor unit. Via this interface, the demand control signals go directly to the outdoor unit control PCB. 3 control levels are available.

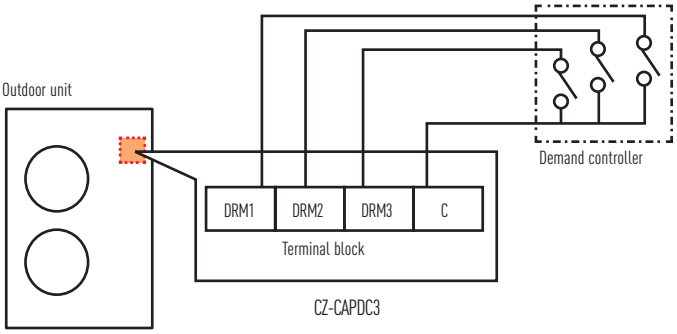

Only for 6N series ECO-i outdoor unit, "Regular Demand control" setting is available. (The system will be limited the maximum input level for all the time without any signal input.) (The setting to be done at the time of system start-up or service by maintenance remote controller.)

MINI ECOi
HIGH EFFICIENCY

For light commercial use

Panasonic's Mini ECOi, the 2-Pipe heat pump small VRF system, is specifically designed for the most demanding applications. Offering between 12,1 kW and 15,5 kW cooling capacity in 3 sizes and up to 9 indoor units connected, the Mini ECOi sets standards of performance and flexibility.
Utilising R410A and DC inverter technology, Panasonic offers VRF to a new and growing market.
Forming a new key part of the Panasonic VRF line up, the Mini ECOi is compatible with the same indoor units and controls as the rest of the ECOi range.

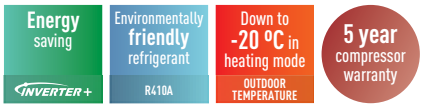

HP			4 HP						5 HP						6 HP					
Model			**U-4LE1E5**			**U-4LE1E8**			**U-5LE1E5**			**U-5LE1E8**			**U-6LE1E5**			**U-6LE1E8**		
Power supply		V	220	230	240	380	400	415	220	230	240	380	400	415	220	230	240	380	400	415
			Single Phase / 50Hz			Three Phase / 50Hz			Single Phase / 50Hz			Three Phase / 50Hz			Single Phase / 50Hz			Three Phase / 50Hz		
Cooling capacity	Nominal	kW	12,1			12,1			14,0			14,0			15,5			15,5		
EER [1]	**Nominal**	**W/W**	**4,30**			**4,30**			**4,20**			**4,20**			**3,45**			**3,45**		
Running amperes		A	13,9	13,3	12,7	4,9	4,7	4,5	16,3	15,6	14,9	5,7	5,4	5,2	21,5	20,5	19,7	7,5	7,1	6,9
Power input cooling	Nominal	kW	2,81			2,81			3,33			3,33			4,49			4,49		
Heating capacity	Nominal	kW	12,5			12,5			16,0			16,0			18,0			18,0		
COP [1]	**Nominal**	**W/W**	**4,62**			**4,62**			**4,30**			**4,30**			**3,95**			**3,95**		
Running amperes		A	13,2	12,7	12,1	4,7	4,5	4,3	18,0	17,2	16,5	6,3	6,0	5,8	21,6	20,7	19,8	7,5	7,2	6,9
Power input heating	Nominal	kW	2,71			2,71			3,72			3,72			4,56			4,56		
Starting amperes		A	1	1	1	1	1	1	1	1	1	1	1	1	1	1	1	1	1	1
Maximum amperes		A	21,0	21,0	21,0	8,5	8,5	8,5	24,5	24,5	24,5	10,0	10,0	10,0	28,0	28,0	28,0	12,0	12,0	12,0
Maximum power input		kW	4,44	4,64	4,84	5,15	5,42	5,62	5,17	5,41	5,64	6,06	6,37	6,61	5,91	6,18	6,45	7,27	7,65	7,94
Maximum number of connectable indoor units			6			6			9			9			9			9		
Air volume	Cooling / Heating	m³/min	95			95			104			104			104			104		
Sound pressure level	Cooling (Hi / Lo)	dB(A)	50 / 47			50 / 47			51 / 48			51 / 48			52 / 49			52 / 49		
	Heating (Hi / Lo)	dB(A)	52 / 49			52 / 49			53 / 50			53 / 50			55 / 52			55 / 52		
Sound power level	Cooling (Hi)	dB	68			68			69			69			70			70		
	Heating (Hi)	dB	70			70			71			71			73			73		
Dimensions	H x W x D	mm	1.330 x 940 x 340			1.330 x 940 x 340			1.330 x 940 x 340			1.330 x 940 x 340			1.330 x 940 x 340			1.330 x 940 x 340		
Net weight		kg	104			103			104			103			104			103		
Piping connections	Liquid pipe	inch (mm)	9,52 (3/8)			9,52 (3/8)			9,52 (3/8)			9,52 (3/8)			9,52 (3/8)			9,52 (3/8)		
	Gas pipe	inch (mm)	15,88 (5/8)			15,88 (5/8)			15,88 (5/8)			15,88 (5/8)			19,05 (3/4)			19,05 (3/4)		
Refrigerant loading	R410A	kg	3,5			3,5			3,5			3,5			3,5			3,5		
Operating range	Cooling Min / Max	°C	-10 / 46°C DB			-10 / 46°C DB			-10 / 46°C DB			-10 / 46°C DB			-10 / 46°C DB			-10 / 46°C DB		
	Heating Min / Max	°C	-20 / 24°C DB -20 / 18°C WB			-20 / 24°C DB -20 / 18°C WB			-20 / 24°C DB -20 / 18°C WB			-20 / 24°C DB -20 / 18°C WB			-20 / 24°C DB -20 / 18°C WB			-20 / 24°C DB -20 / 18°C WB		

Rating Conditions: Cooling Indoor 27°C DB / 19°C WB. Cooling Outdoor 35°C DB / 24°C WB. Heating Indoor 20°C DB. Heating Outdoor 7°C DB / 6°C WB.
DB: Dry Bulb; WB: Wet Bulb

1) EER and COP classification is at 400 V in accordance with EU directive 2002/31/EC.
Specifications subject to change without notice.
For detailed information about ErP, please visit our page http://www.ptc.panasonic.eu



U-4LE1E5 // U-4LE1E8 // U-5LE1E5 // U-5LE1E8 // U-6LE1E5 // U-6LE1E8

Technical focus

- Single Phase or Three Phase power supply
- One Amp start current
- DC inverter technology combined with R410A
- Diversity ratio 50-130%
- Cooling operation to -10°C
- Compact outdoor unit 1.330 x 940 x 410mm

Flexible pipework

Category	Item	Description		Max length (m)
Allowable pipework length	L1	Maximum pipe run	Actual length	120
			Equivalent length	140
	L2-L3	Difference between maximum length and minimum length from the first distribution joint		40
	L3 L4 Ln	Maximum length of each distribution joint		30
	L1+L3+L4	Maximum total pipe run length		150
Allowable height difference	H1	When outdoor unit installed higher		50
		When outdoor unit installer lower		40
	H2	Maximum difference between indoor units		15

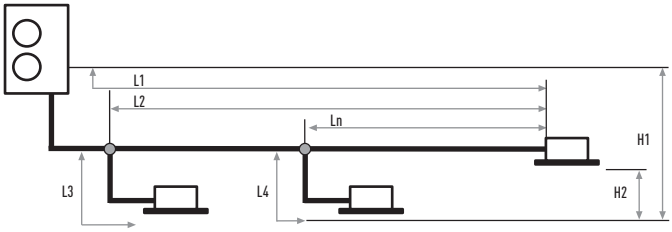

TOP VIEW

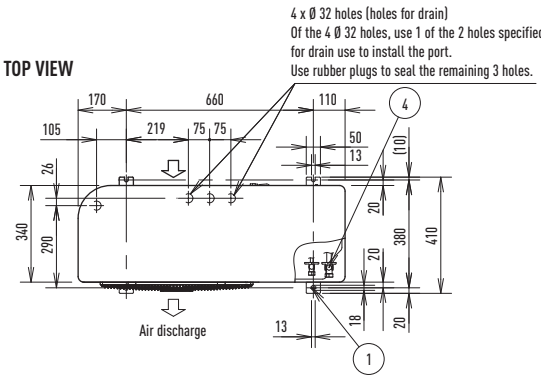

FRONT VIEW

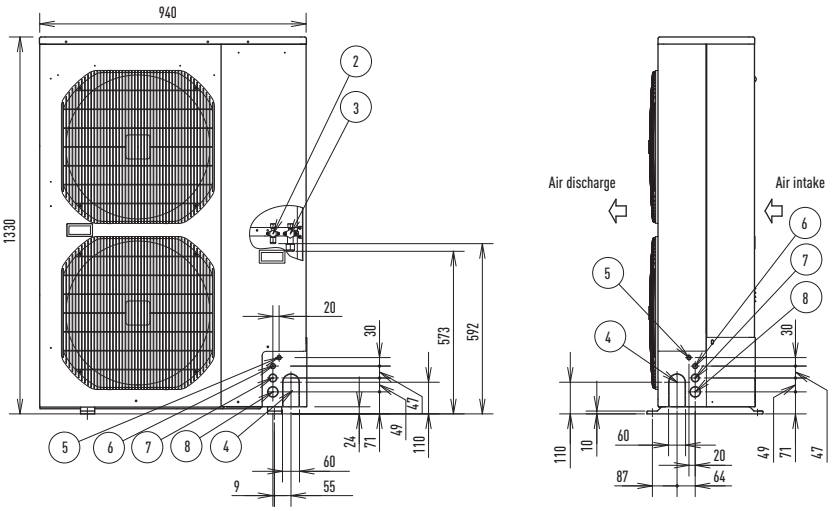

		Size (mm)
1	Mounting hole (4-R6.5), anchor bolt:	M10
2	Refrigerant tubing (liquid tube), flared connection	Ø 9,52
3	Refrigerant tubing (gas tube), flared connection	15,88 or 19,05
4	Refrigerant tubing port	
5	Electrical wirang port	Ø 16
6	Electrical wiring port	Ø 19
7	Electrical wiring port	Ø 29
8	Electrical wiring port	Ø 38



2-Pipe ECOi 6N series. High-efficiency and large-capacity VRF system

Large-capacity VRF systems using R410A with advanced technology.
Newly designed next generation VRF!



Energy saving
INVERTER+
Environmentally friendly refrigerant
R410A
Down to -25 °C in heating mode
OUTDOOR TEMPERATURE
5 year compressor warranty



HIGH EFFICIENCY

Energy savings

The operation efficiency has been improved using highly efficient R410A refrigerant, new DC inverter compressor, new DC motor and new design of heat exchanger.

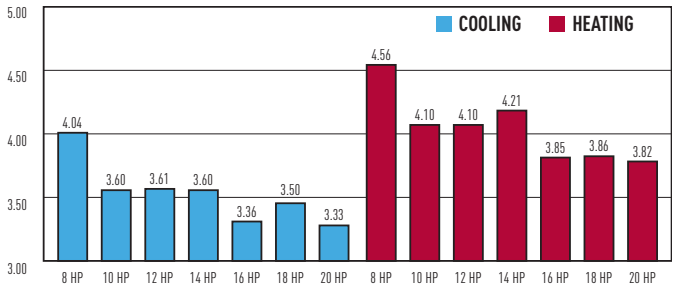

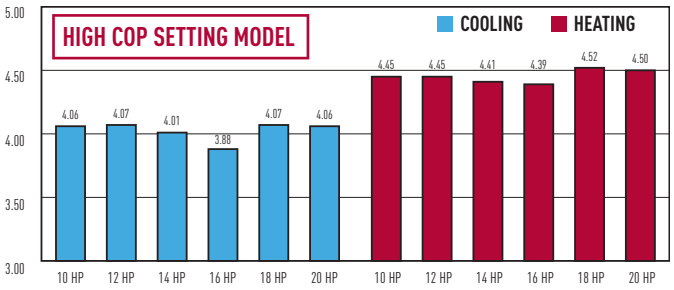

Extended operating range

Heating operation range: Extended heating operation range enables heating even when outdoor temperature as low as -25°C. Using a wired remote control, indoor heating temperature range can be set from 16°C to 30°C.

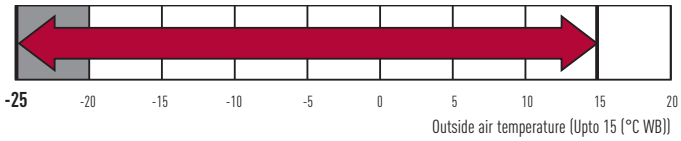

Wide temperature setting range.

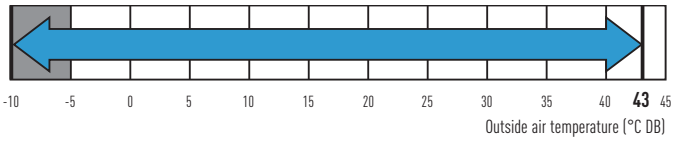

Cooling operation range: -10°C DB to +43°C DB.

2-Pipe ECOi 6N series

Connectable indoor/outdoor unit capacity ratio up to 200%

VRF systems attain maximum indoor unit connection capacity of up to 200 % of the unit's connection range, depending on the outdoor and indoor models selected. So for a reasonable investment, VRF systems provide an ideal air conditioning solution for locations where full cooling/heating are not always required.

System (HP)	8	10	12	14	16	18	20	22	24	26	28	30	32	34	36	38	40	42	44	46	48	50	52	54	56	58	60
Connectable indoor units: 130%	13	16	19	23	26	29	33	36	40	43	47	50	53	56	59	64											
Connectable indoor units: 200%	20	25	30	35	40	45	50	55	60	64																	

If more than 100% indoor units are operated with a high load, the units may not perform at the rated capacity. For the details, please consult with an authorized Panasonic dealer.

Increased piping lengths and design flexibility

Adaptable to various building types and sizes. Actual piping length: 180m.
Maximum piping length: 1.000m.

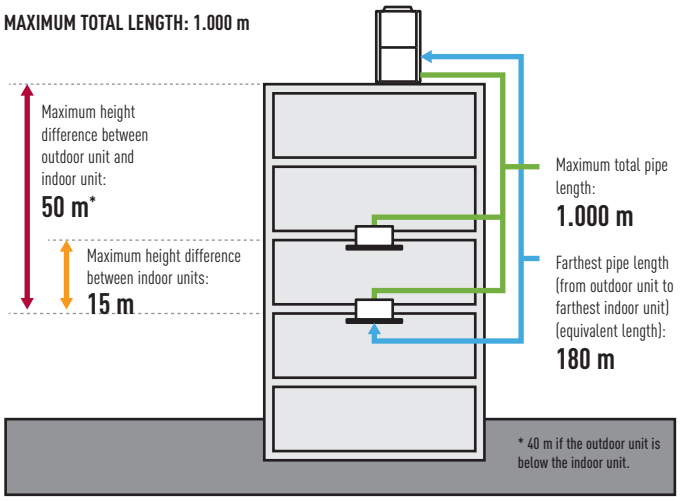

Extended compressor life by uniform compressor operation times

Total compressors run-time is monitored by a built-in microcomputer, which ensures that operation times of all compressors within the same refrigerant circuit are balanced. Compressors with histories showing shorter run times are selected first, ensuring equal wear and tear across all units and extended working life for the system.

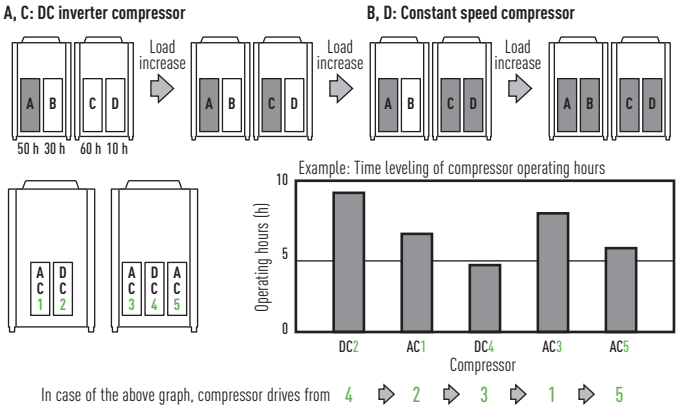

Newly designed fan. Optimized air flow and noise reduction

Newly designed fan and bell-mouth reduces stress to fan by dispersing higher wind speeds. Thus, lower air resistance results in lower energy consumption.
The turbulent flow (blue part) can be suppressed and the noise can be reduced. Even though the high speed circulation is utilized, the noise level is held at the same level as normal.


Smaller hub diameter

Non-stop operation during maintenance

In the event of an indoor unit malfunctioning, other indoor units can be set to continue operation even during maintenance.

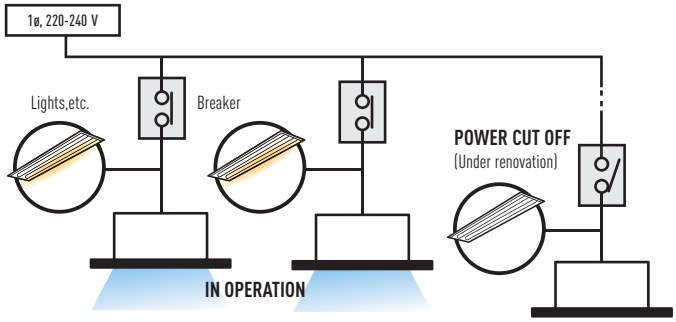

Automatic Backup operation in the case of compressor and outdoor units malfunction

Backup operation is applied in the case of emergencies. If error message is displayed, please contact your local service office. (Except for 8 and 10 HP single unit installation).



Easy to design solutions for schools, hotels, hospitals and other large buildings

Difference between maximum and minimum pipe runs after first branch can be a maximum of 50 m; larger pipe runs can be up to 180 m.

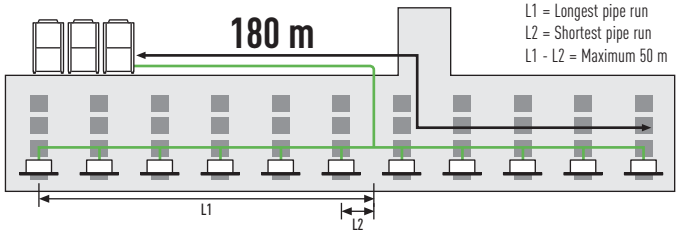

ECOi 2-Pipe and 3-Pipe wind protection shield

PAW-WPH1	1 long side of the outdoor unit (624 x 983 x 489)
PAW-WPH2	1 long side of the outdoor units (853 x 983 x 489)
PAW-WPH3	2 long sides of the outdoor units (744 x 983 x 289) (2ER SET)

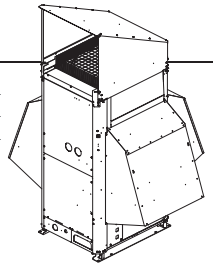



Anti-corrosion model available for all ECOi and ECO G models

For bespoke projects: for use in coastal areas and other locations where sea air can easily cause salt damage to units. The unit is treated with anti-corrosion solution to provide exceptional durability in adverse salty environments.

Note: Using this unit does not completely eliminate the possibility of rust developing. For details concerning unit installation and maintenance, please consult with an authorized dealer.



Demand control Kit information

		Mini ECOi	ECOi 6N	ECO G	PACi
CZ-CAPDC2	Seri-Para I/O unit for outdoor unit	Yes	Yes	Yes	Yes
CZ-CAPDC3	Demand Control Kit	Yes	Yes	Yes	Yes

Function of Demand control

This function limits the maximum operating input at peak time.
3 levels as 100%/70%/0% is set at the factory[1].
The limit value setting for level 1 & 2 can be changed from 40% ~ 100% by 5% at the system commitioning.

1. The 3rd level is available only for CZ-CAPDC3 & CZ-CAPDC4.)

	Power input level (vs. rated condition)	
Level 1	100% (at ship)	From 40%-100% setting can be changed (by 5% step)
Level 2	70% (at ship)	
Level 3	0% (Forcible thermo-OFF)	

OPERATING IMAGE

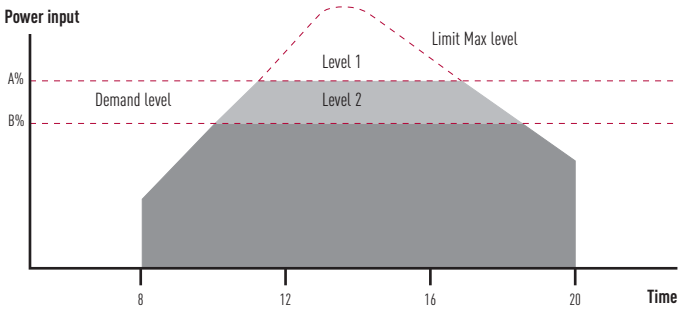

CZ-CAPDC2

Demand control input signals sent to this outdoor interface will be transferred to the system via inter-unit control wiring. Other controls (ex. Operation ON/OFF, Mode switch Cool/Heat) are also available. Demand level 1 & 2 are available. Up to 4 systems can be connected and controlled independently or all together by one interface.

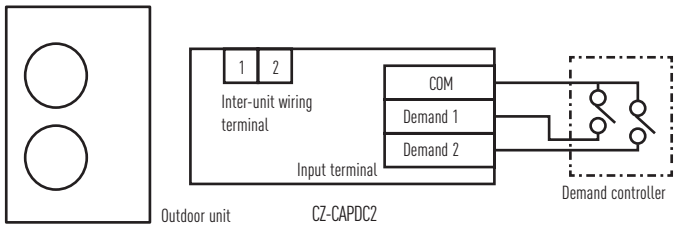

CZ-CAPDC3 for PACi and Mini ECOi

Optional terminal block kit for demand control to be mounted in the outdoor unit. Via this interface, the demand control signals go directly to the outdoor unit control PCB. 3 control levels are available.

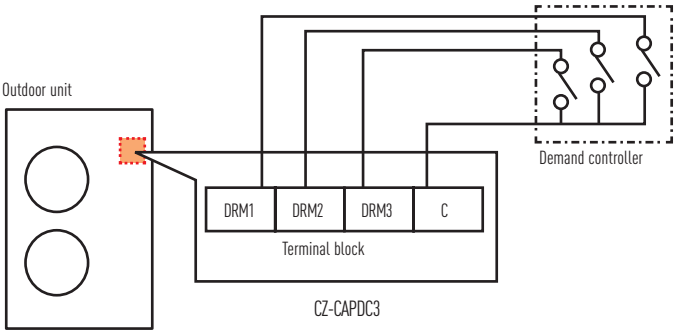

* Only for 6N series ECO-i outdoor unit, "Regular Demand control" setting is available. (The system will be limited the maximum input level for all the time without any signal input.) (The setting to be done at the time of system start-up or service by maintenance remote controller.)

2-PIPE ECOi 6N SERIES
8-12 HP

Next generation VRF newly-redesigned!

At start up stage a unit can have Hi COP function selected - this lowers capacity but increases the COP. It's your choice.

- Top class COP= 4.56 (In case of 8 HP heating)
- Heating operation at outdoor temperatures down to –25°C
- Extended pipe runs of up to 180 m

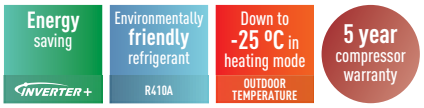

HP			8 HP	10 HP	12 HP
Standard model			**U-8ME1E81**	**U-10ME1E81**	**U-12ME1E81**
Power supply			400 V / Three Phase / 50 Hz	400 V / Three Phase / 50 Hz	400 V / Three Phase / 50 Hz
Cooling capacity		kW	22,4	28,0	33,5
EER [1]	**Nominal**	**W/W**	**4,04**	**3,60**	**3,61**
Operating current		A	8,5	12,2	14,6
Power input cooling		kW	5,54	7,78	9,29
Heating capacity		kW	25,0	31,5	37,5
COP [1]	**Nominal**	**W/W**	**4,56**	**4,10**	**4,10**
Operating current		A	8,4	12,1	14,4
Power input heating		kW	5,48	7,68	9,15
Starting current		A	1	1	1
External static pressure		Pa	80	80	80
Air volume		m^3/h	8.820	9.180	11.400
Sound pressure level	Normal mode	dB(A)	56,5	59,0	61,0
	Silent mode	dB(A)	53,5	56,0	58,0
Sound power level	Normal mode	dB	71,0	73,5	75,5
Dimensions	H x W x D	mm	1.758 x 770 x 930	1.758 x 770 x 930	1.758 x 770 x 930
Net weight		kg	234	234	281
Piping connections	Gas pipe	mm	19,05	22,22	25,4
	Liquid pipe	mm	9,52	9,52	12,7
	Balance pipe	mm	6,35	6,35	6,35
Refrigerant amount at shipment		kg	6,5	6,8	6,8
Demand control			13 steps (0 – 100 %)	13 steps (0 – 100 %)	13 steps (0 – 100 %)
Operating range	Cooling Min / Max	°C	-10°C DB / +43°C DB	-10°C DB / +43°C DB	-10°C DB / +43°C DB
	Heating Min / Max	°C	-25°C WB / +15°C WB	-25°C WB / +15°C WB	-25°C WB / +15°C WB

Rating Conditions: Cooling Indoor 27°C DB / 19°C WB. Cooling Outdoor 35°C DB / 24°C WB. Heating Indoor 20°C DB. Heating Outdoor 7°C DB / 6°C WB.
DB: Dry Bulb; WB: Wet Bulb

1) EER and COP classification is at 400 V in accordance with EU directive 2002/31/EC.
Specifications subject to change without notice.
For detailed information about ErP, please visit our page http://www.ptc.panasonic.eu



U-8ME1E81 // U-10ME1E81 // U-12ME1E81

Technical focus

- Compact casing
- Longer maximum piping length up to 1,000m
- Extended operating range to provide heating at outdoor temperature as low as -25°C
- Suitable for refurbishment projects (Refer to technical data book)

Compact design

The 8-12 HP unit is designed to fit inside a lift for easy on-site handling.



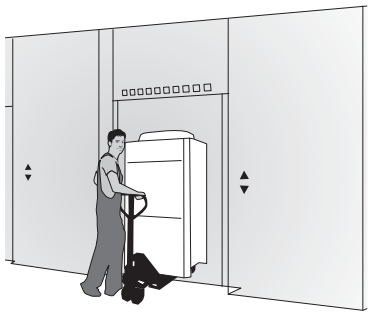

FRONT VIEW

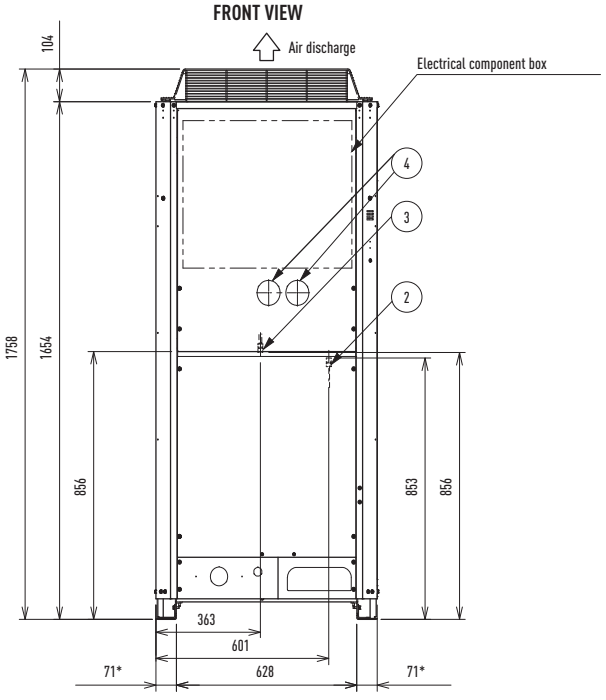

* Installation fixing bracket, installation side.

TOP VIEW

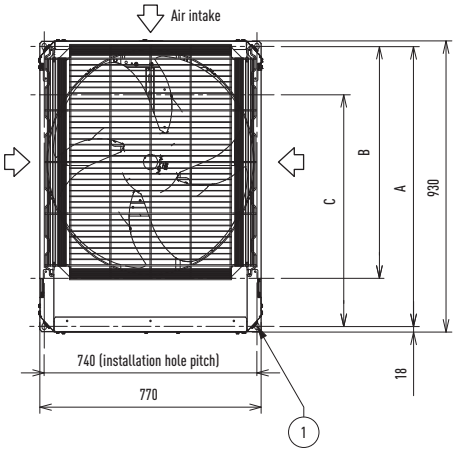

A	894 (installation hole pitch). The tubing is routed out frpm the front
B	730 (installation hole pitch). The tubing is routed out frpm the front
C	730 (installation hole pitch)
1	Installation holes (8-15x21 elongated holes) anchor bolts M12 or larger
2	Pressure outlet port (for high pressure: Ø 7.94 Scrader-type connection)
3	Pressure outlet port (for low pressure: Ø 7.94 Scrader-type connection)
4	Knock-out hole for connecting pressure gauge (optional)
5	Terminal board
6	Terminal board (for inter-outdoor-unit control wiring)

2-PIPE ECOi 6N SERIES
14-16 HP

Next generation VRF newly-redesigned!

At start up stage a unit can have Hi COP function selected - this lowers capacity but increases the COP. It's your choice.

- Heating operation at outdoor temperatures down to –25°C
- Extended pipe runs of up to 180 m

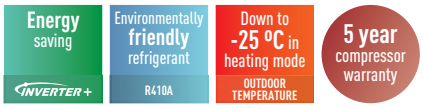

HP			14 HP	16 HP
Standard model			**U-14ME1E81**	**U-16ME1E81**
Power supply			400 V / Three Phase / 50 Hz	400 V / Three Phase / 50 Hz
Cooling capacity		kW	40,0	45,0
EER [1]	**Nominal**	**W/W**	**3,60**	**3,36**
Operating current		A	17,1	20,7
Power input cooling		kW	11,1	13,4
Heating capacity		kW	45,0	50,0
COP [1]	**Nominal**	**W/W**	**4,21**	**3,85**
Operating current		A	16,5	20,1
Power input heating		kW	10,7	13,0
Starting current		A	77	81
External static pressure		Pa	80	80
Air volume		m^3/h	12.720	12.720
Sound pressure level	Normal mode	dB(A)	62,0	62,0
	Silent mode	dB(A)	59,0	59,0
Sound power level	Normal mode	dB	76,5	76,5
Dimensions	H x W x D	mm	1.758 x 1.000 x 930	1.758 x 1.000 x 930
Net weight		kg	309	309
Piping connections	Gas pipe	mm	25,4	28,58
	Liquid pipe	mm	12,7	12,7
	Balance pipe	mm	6,35	6,35
Refrigerant amount at shipment		kg	8,5	8,5
Demand control			13 steps (0 – 100 %)	13 steps (0 – 100 %)
Operating range	Cooling Min / Max	°C	-10°C DB / +43°C DB	-10°C DB / +43°C DB
	Heating Min / Max	°C	-25°C WB / +15°C WB	-25°C WB / +15°C WB

Rating Conditions: Cooling Indoor 27°C DB / 19°C WB. Cooling Outdoor 35°C DB / 24°C WB. Heating Indoor 20°C DB. Heating Outdoor 7°C DB / 6°C WB.
DB: Dry Bulb; WB: Wet Bulb

1) EER and COP classification is at 400 V in accordance with EU directive 2002/31/EC.
Specifications subject to change without notice.
For detailed information about ErP, please visit our page http://www.ptc.panasonic.eu



U-14ME1E81 // U-16ME1E81

Technical focus

- Longer Max piping length up to 1,000 m
- Extended operating range to provide heating at outdoor temperature as low as -25°C
- Suitable for refurbishment projects (Refer to technical data book)

High external static pressure

Special setting at site allows all models to provide up to 80 Pa due to newly designed fan, fan motor and casing.
The flexible design requires an air discharge duct to avoid a reduction in performance due to shortcut of air circulation. This new feature allows the outdoor unit to be installed inside plant rooms on any floor of the building.



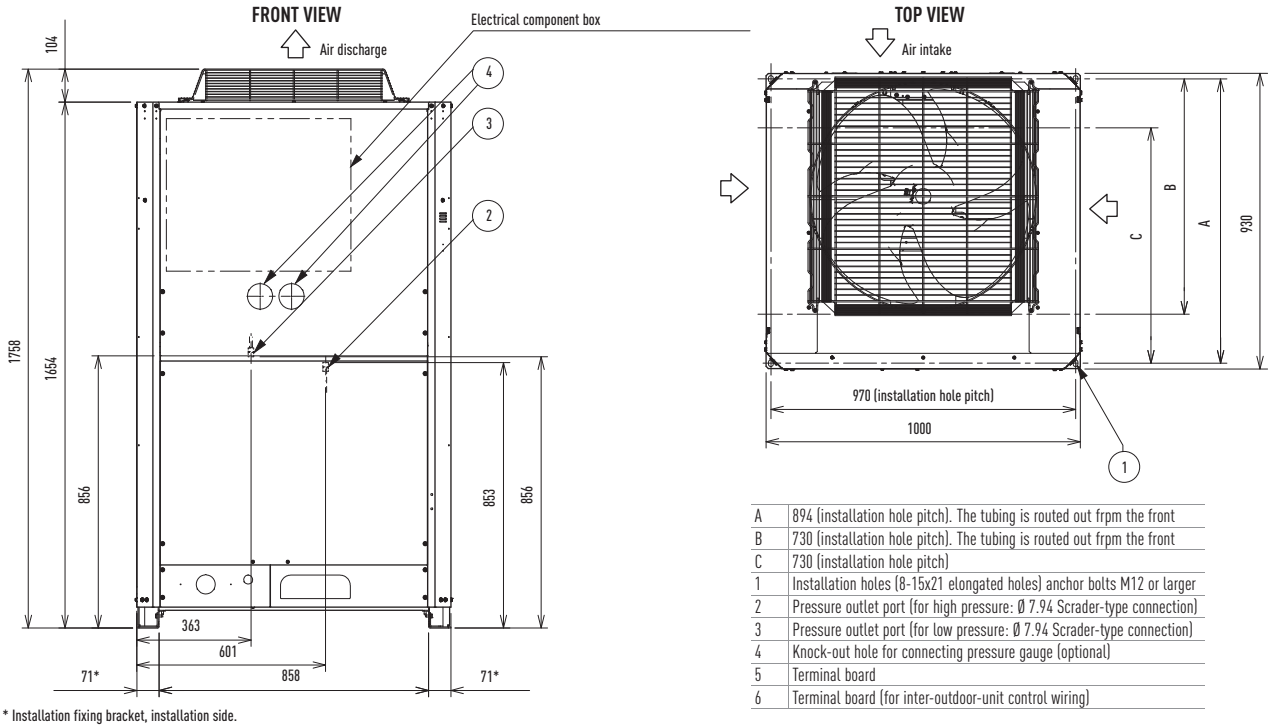

* Installation fixing bracket, installation side.

A	894 (installation hole pitch). The tubing is routed out frpm the front
B	730 (installation hole pitch). The tubing is routed out frpm the front
C	730 (installation hole pitch)
1	Installation holes (8-15x21 elongated holes) anchor bolts M12 or larger
2	Pressure outlet port (for high pressure: Ø 7.94 Scrader-type connection)
3	Pressure outlet port (for low pressure: Ø 7.94 Scrader-type connection)
4	Knock-out hole for connecting pressure gauge (optional)
5	Terminal board
6	Terminal board (for inter-outdoor-unit control wiring)

2-PIPE ECOi 6N SERIES
18-20 HP

Next generation VRF newly-redesigned!

At start up stage a unit can have Hi COP function selected - this lowers capacity but increases the COP. It's your choice.

- Heating operation at outdoor temperatures down to –25°C
- Extended pipe runs of up to 180 m

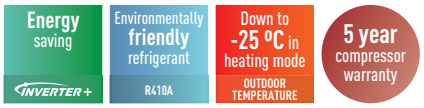

HP			18 HP	20 HP
Standard model			**U-18ME1E81**	**U-20ME1E81**
Power supply			400 V / Three Phase / 50 Hz	400 V / Three Phase / 50 Hz
Cooling capacity		kW	50,0	56,0
EER [1]	**Nominal**	**W/W**	**3,50**	**3,33**
Operating current		A	22,8	26,8
Power input cooling		kW	14,3	16,8
Heating capacity		kW	56,0	63,0
COP [1]	**Nominal**	**W/W**	**3,86**	**3,82**
Operating current		A	23,1	26,3
Power input heating		kW	14,5	16,5
Starting current		A	93	101
External static pressure		Pa	80	80
Air volume		m^3/h	14.640	16.980
Sound pressure level	Normal mode	dB(A)	60,0	63,0
	Silent mode	dB(A)	57,0	60,0
Sound power level	Normal mode	dB	74,5	77,5
Dimensions	H x W x D	mm	1.758 x 1.540 x 930	1.758 x 1.540 x 930
Net weight		kg	421	421
Piping connections	Gas pipe	mm	28,58	28,58
	Liquid pipe	mm	15,88	15,88
	Balance pipe	mm	6,35	6,35
Refrigerant amount at shipment		kg	9,0	9,0
Demand control			13 steps (0 – 100 %)	13 steps (0 – 100 %)
Operating range	Cooling Min / Max	°C	-10°C DB / +43°C DB	-10°C DB / +43°C DB
	Heating Min / Max	°C	-25°C WB / +15°C WB	-25°C WB / +15°C WB

Rating Conditions: Cooling Indoor 27°C DB / 19°C WB. Cooling Outdoor 35°C DB / 24°C WB. Heating Indoor 20°C DB. Heating Outdoor 7°C DB / 6°C WB.
DB: Dry Bulb; WB: Wet Bulb

1) EER and COP classification is at 400 V in accordance with EU directive 2002/31/EC.
Specifications subject to change without notice.
For detailed information about ErP, please visit our page http://www.ptc.panasonic.eu



U-18ME1E81 // U-20ME1E81

Technical focus

- Bigger capacity in one casing
- Longer Max piping length up to 1,000 m
- Extended operating range to provide heating at outdoor temperature as low as -25°C
- Suitable for refurbishment projects (Refer to technical data book)

Compact design

2-Pipe ECOi 6N series has reduced the installation space required by 1 chassis for sizes up to 20 HP.

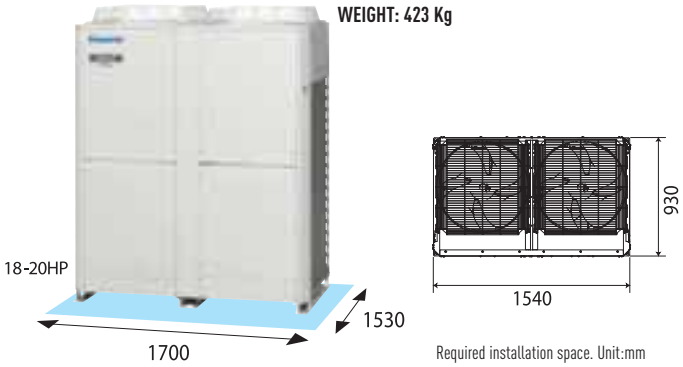

Required installation space. Unit:mm

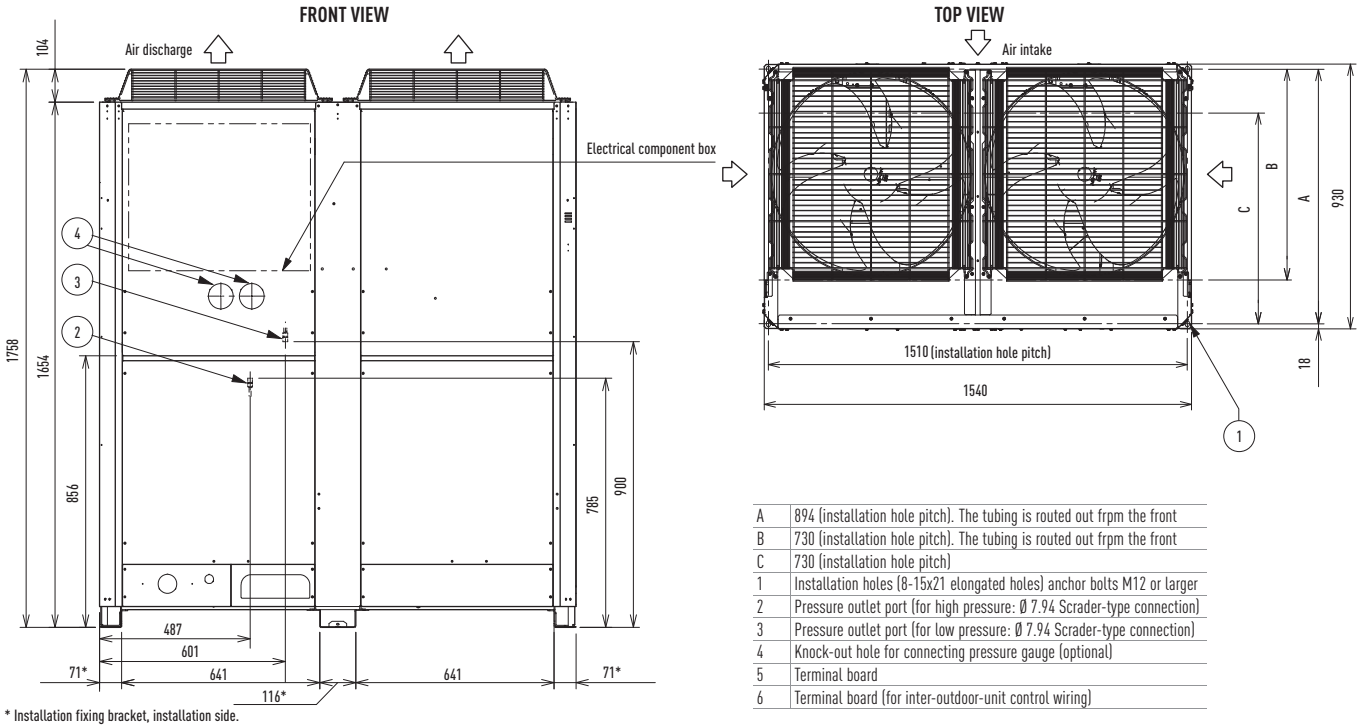

* Installation fixing bracket, installation side.

A	894 (installation hole pitch). The tubing is routed out frpm the front
B	730 (installation hole pitch). The tubing is routed out frpm the front
C	730 (installation hole pitch)
1	Installation holes (8-15x21 elongated holes) anchor bolts M12 or larger
2	Pressure outlet port (for high pressure: Ø 7.94 Scrader-type connection)
3	Pressure outlet port (for low pressure: Ø 7.94 Scrader-type connection)
4	Knock-out hole for connecting pressure gauge (optional)
5	Terminal board
6	Terminal board (for inter-outdoor-unit control wiring)

2-PIPE ECOi 6N SERIES
COMBINATION FROM 22 TO 60 HP

Next generation VRF newly-redesigned!

At start up stage a unit can have Hi COP function selected - this lowers the capacity and increases the COP. It's your choice.

- Wide range of system up to 60 HP
- Heating operation at outdoor temperatures down to –25°C
- Extended pipe runs of up to 180 m

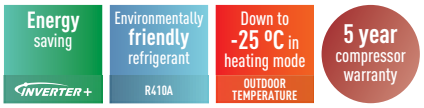

HP			22 HP	24 HP	26 HP	28 HP	30 HP	32 HP	34 HP	36 HP
Standard model			**U-14ME1E81 U-8ME1E81**	**U-14ME1E81 U-10ME1E81**	**U-14ME1E81 U-12ME1E81**	**U-16ME1E81 U-12ME1E81**	**U-16ME1E81 U-14ME1E81**	**U-16ME1E81 U-16ME1E81**	**U-18ME1E81 U-16ME1E81**	**U-20ME1E81 U-16ME1E81**
Power supply			400 V / Three Phase / 50 Hz							
Cooling capacity		kW	61,5	68,0	73,0	78,5	85,0	90,0	96,0	101,0
EER [1]	**Nominal**	**W/W**	**3,75**	**3,60**	**3,60**	**3,47**	**3,47**	**3,35**	**3,43**	**3,34**
Operating current		A	25,2	29,4	31,6	35,2	37,8	41,5	44,0	47,5
Power input cooling		kW	16,4	18,9	20,3	22,6	24,5	26,9	28,0	30,2
Heating capacity		kW	69,0	76,5	81,5	87,5	95,0	100,0	108,0	113,0
COP [1]	**Nominal**	**W/W**	**4,34**	**4,09**	**4,12**	**3,96**	**4,03**	**3,86**	**3,86**	**3,83**
Operating current		A	24,5	29,1	30,8	34,4	36,4	40,0	44,0	46,4
Power input heating		kW	15,9	18,7	19,8	22,1	23,6	25,9	28,0	29,5
Starting current		A	86	94	98	102	98	102	114	122
External static pressure		Pa	80	80	80	80	80	80	80	80
Air volume		m^3/h	21.540	21.900	24.120	24.120	25.440	25.440	27.360	29.700
Sound pressure level	Normal mode	dB(A)	63,0	63,5	64,5	64,5	65,0	65,0	64,0	65,5
	Silent mode	dB(A)	60,0	60,5	61,5	61,5	62,0	62,0	61,0	62,5
Sound power level	Normal mode	dB	77,5	78,0	79,0	79,0	79,5	79,5	78,5	80,0
Dimensions	H x W x D	mm	1.758 x 1.830 x 930	1.758 x 1.830 x 930	1.758 x 1.830 x 930	1.758 x 1.830 x 930	1.758 x 2.060 x 930	1.758 x 2.060 x 930	1.758 x 2.600 x 930	1.758 x 2.600 x 930
Net weight		kg	543	543	590	590	618	618	730	730
Piping connections	Gas pipe	mm	28,58	28,58	31,75	31,75	31,75	31,75	31,75	38,10
	Liquid pipe	mm	15,88	15,88	19,05	19,05	19,05	19,05	19,05	19,05
	Balance pipe	mm	6,35	6,35	6,35	6,35	6,35	6,35	6,35	6,35
Refrigerant amount at shipment		kg	15,0	15,3	15,3	15,3	17,0	17,0	17,5	17,5
Demand control			13 steps (0-100%)	13 steps (0-100%)	13 steps (0-100%)	13 steps (0-100%)	13 steps (0-100%)	13 steps (0-100%)	13 steps (0-100%)	13 steps (0-100%)
Operating range	Cooling Min / Max	°C	-10°C DB / +43°C DB							
	Heating Min / Max	°C	-25°C WB / +15°C WB							

Rating Conditions: Cooling Indoor 27°C DB / 19°C WB. Cooling Outdoor 35°C DB / 24°C WB. Heating Indoor 20°C DB. Heating Outdoor 7°C DB / 6°C WB.
DB: Dry Bulb; WB: Wet Bulb

1) EER and COP classification is at 400 V in accordance with EU directive 2002/31/EC.
Specifications subject to change without notice.
For detailed information about ErP, please visit our page http://www.ptc.panasonic.eu



38 HP	40 HP	42 HP	44 HP	46 HP	48 HP	50 HP	52 HP	54 HP	56 HP	58 HP	60 HP
U-20ME1E81 U-18ME1E81	U-20ME1E81 U-20ME1E81	U-16ME1E81 U-14ME1E81 U-12ME1E81	U-16ME1E81 U-16ME1E81 U-12ME1E81	U-16ME1E81 U-16ME1E81 U-14ME1E81	U-16ME1E81 U-16ME1E81 U-16ME1E81	U-18ME1E81 U-16ME1E81 U-16ME1E81	U-20ME1E81 U-16ME1E81 U-16ME1E81	U-20ME1E81 U-18ME1E81 U-16ME1E81	U-20ME1E81 U-18ME1E81 U-18ME1E81	U-20ME1E81 U-20ME1E81 U-18ME1E81	U-20ME1E81 U-20ME1E81 U-20ME1E81
400 V / Three Phase / 50 Hz											
107,0	113,0	118,0	124,0	130,0	135,0	140,0	145,0	151,0	156,0	162,0	168,0
3,44	**3,36**	**3,51**	**3,43**	**3,43**	**3,35**	**3,41**	**3,35**	**3,39**	**3,44**	**3,38**	**3,33**
49,6	53,6	52,1	56,2	58,5	62,2	64,2	67,7	70,3	72,4	76,4	80,4
31,1	33,6	33,6	36,2	37,9	40,3	41,1	43,3	44,5	45,4	47,9	50,4
119,0	127,0	132,0	138,0	145,0	150,0	155,0	160,0	169,0	175,0	182,0	189,0
3,84	**3,85**	**4,04**	**3,92**	**3,96**	**3,86**	**3,86**	**3,84**	**3,85**	**3,85**	**3,83**	**3,81**
49,4	52,6	50,8	54,6	56,5	60,1	62,8	65,2	69,3	72,4	75,8	79,1
31,0	33,0	32,7	35,2	36,6	38,9	40,2	41,7	43,9	45,4	47,5	49,6
123	127	119	122	119	122	134	142	144	146	149	153
80	80	80	80	80	80	80	80	80	80	80	80
31.620	33.960	36.840	36.840	38.160	38.160	40.080	42.420	44.340	46.260	48.600	50.940
65,0	66,0	66,5	66,5	67,0	67,0	66,0	67,0	66,5	66,0	67,0	68,0
62,0	63,0	63,5	63,5	64,0	64,0	63,0	64,0	63,5	63,0	64,0	65,0
79,5	80,5	81,0	81,0	81,5	81,5	80,5	81,5	81,0	80,5	81,5	82,5
1.758 x 3.140 x 930	1.758 x 3.140 x 930	1.758 x 2.890 x 930	1.758 x 2.890 x 930	1.758 x 3.120 x 930	1.758 x 3.120 x 930	1.758 x 3.660 x 930	1.758 x 3.660 x 930	1.758 x 4.200 x 930	1.758 x 4.740 x 930	1.758 x 4.740 x 930	1.758 x 4.740 x 930
842	842	899	899	927	927	1.039	1.039	1.151	1.263	1.263	1.263
38,10	38,10	38,10	38,10	38,10	38,10	38,10	38,10	38,10	38,10	38,10	38,10
19,05	19,05	19,05	19,05	19,05	19,05	19,05	19,05	19,05	19,05	19,05	19,05
6,35	6,35	6,35	6,35	6,35	6,35	6,35	6,35	6,35	6,35	6,35	6,35
18,0	18,0	23,8	23,8	25,5	25,5	26,0	26,0	26,5	27,0	27,0	27,0
13 steps (0-100%)	13 steps (0-100%)	13 steps (0-100%)	13 steps (0-100%)	13 steps (0-100%)	13 steps (0-100%)	13 steps (0-100%)	13 steps (0-100%)	13 steps (0-100%)	13 steps (0-100%)	13 steps (0-100%)	13 steps (0-100%)
-10°C DB / +43°C DB											
-25°C WB / +15°C WB											

U-8ME1E81 // U-10ME1E81 // U-12ME1E81 // U-14ME1E81 // U-16ME1E81 // U-18ME1E81 // U-20ME1E81 COMBINATION

Technical focus

- Increased connectable I_U/O_U cap. ratio up to 200%
- Increased Max no. of connectable I_U up to 64 units
- Increased high external static pressure up to 80 Pa
- Extended operating range to provide heating at outdoor temperature as low as -25°C

2-PIPE ECOi 6N SERIES
10-12 HP
HIGH COP SETTING MODEL

Next generation VRF newly-redesigned!

- Heating operation at outdoor temperatures down to –25°C
- Extended pipe runs of up to 180 m

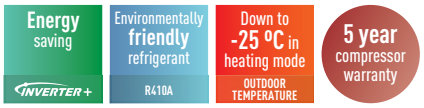

HP			10 HP	12 HP
High COP setting model			**U-14ME1E81**	**U-16ME1E81**
Power supply			400 V / Three Phase / 50 Hz	400 V / Three Phase / 50 Hz
Cooling capacity		kW	28,0	33,5
EER [1]	**Nominal**	**W/W**	**4,06**	**4,07**
Operating current		A	10,7	12,7
Power input cooling		kW	6,90	8,23
Heating capacity		kW	31,5	37,5
COP [1]	**Nominal**	**W/W**	**4,45**	**4,45**
Operating current		A	10,9	13,0
Power input heating		kW	7,08	8,43
Starting current		A	77	81
External static pressure		Pa	80	80
Air volume		m^3/h	12.720	12.720
Sound pressure level	Normal mode	dB(A)	62,0	62,0
	Silent mode	dB(A)	59,0	59,0
Sound power level	Normal mode	dB	76,5	76,5
Dimensions	H x W x D	mm	1.758 x 1.000 x 930	1.758 x 1.000 x 930
Net weight		kg	307	307
Piping connections	Gas pipe	mm	22,22	25,40
	Liquid pipe	mm	9,52	12,70
	Balance pipe	mm	6,35	6,35
Demand control			13 steps (0 – 100 %)	13 steps (0 – 100 %)
Refrigerant amount at shipment		kg	8,5	8,5
Operating range	Cooling Min / Max	°C	-10°C DB / +43°C DB	-10°C DB / +43°C DB
	Heating Min / Max	°C	-25°C WB / +15°C WB	-25°C WB / +15°C WB

Rating Conditions: Cooling Indoor 27°C DB / 19°C WB. Cooling Outdoor 35°C DB / 24°C WB. Heating Indoor 20°C DB. Heating Outdoor 7°C DB / 6°C WB.
DB: Dry Bulb; WB: Wet Bulb

1) EER and COP classification is at 400 V in accordance with EU directive 2002/31/EC.
Specifications subject to change without notice.
For detailed information about ErP, please visit our page http://www.ptc.panasonic.eu



U-14ME1E81 // U-16ME1E81

Technical focus

- Longer Max piping length up to 1,000 m
- Extended operating range to provide heating at outdoor temperature as low as -25°C
- Suitable for refurbishment projects (Refer to technical data book)

High external static pressure

Special setting at site allows all models to provide up to 80 Pa due to newly designed fan, fan motor and casing.
The flexible design requires an air discharge duct to avoid a reduction in performance due to shortcut of air circulation. This new feature allows the outdoor unit to be installed inside plant rooms on any floor of the building.



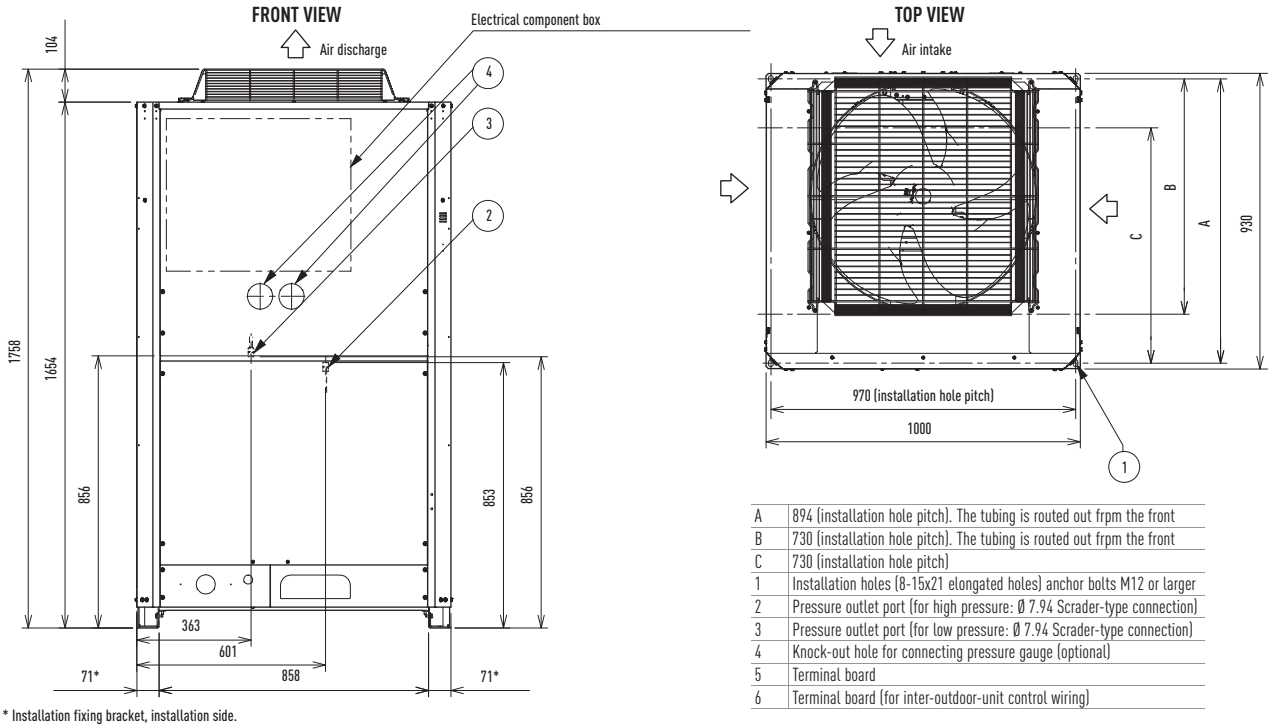

A	894 (installation hole pitch). The tubing is routed out frpm the front
B	730 (installation hole pitch). The tubing is routed out frpm the front
C	730 (installation hole pitch)
1	Installation holes (8-15x21 elongated holes) anchor bolts M12 or larger
2	Pressure outlet port (for high pressure: Ø 7.94 Scrader-type connection)
3	Pressure outlet port (for low pressure: Ø 7.94 Scrader-type connection)
4	Knock-out hole for connecting pressure gauge (optional)
5	Terminal board
6	Terminal board (for inter-outdoor-unit control wiring)

* Installation fixing bracket, installation side.

2-PIPE ECOi 6N SERIES
14-16 HP
HIGH COP SETTING MODEL

Next generation VRF newly-redesigned!

- Heating operation at outdoor temperatures down to –25°C
- Extended pipe runs of up to 180 m

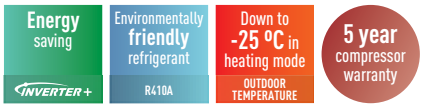

HP			14 HP	16 HP
High COP setting model			**U-18ME1E81**	**U-20ME1E81**
Power supply			400 V / Three Phase / 50 Hz	400 V / Three Phase / 50 Hz
Cooling capacity		kW	40,0	45,0
EER [1]	**Nominal**	**W/W**	**4,01**	**3,88**
Operating current		A	15,4	17,9
Power input cooling		kW	9,98	11,6
Heating capacity		kW	45,0	50,0
COP [1]	**Nominal**	**W/W**	**4,41**	**4,39**
Operating current		A	15,8	17,6
Power input heating		kW	10,2	11,4
Starting current		A	92	98
External static pressure		Pa	80	80
Air volume		m^3/h	14.640	16.980
Sound pressure level	Normal mode	dB(A)	60,0	63,0
	Silent mode	dB(A)	57,0	60,0
Sound power level	Normal mode	dB	74,5	77,5
Dimensions	H x W x D	mm	1.758 x 1.540 x 930	1.758 x 1.540 x 930
Net weight		kg	423	423
Piping connections	Gas pipe	mm	25,40	28,58
	Liquid pipe	mm	12,70	12,70
	Balance pipe	mm	6,35	6,35
Demand control			13 steps (0 – 100 %)	13 steps (0 – 100 %)
Refrigerant amount at shipment		kg	9,0	9,0
Operating range	Cooling Min / Max	°C	-10°C DB / +43°C DB	-10°C DB / +43°C DB
	Heating Min / Max	°C	-25°C WB / +15°C WB	-25°C WB / +15°C WB

Rating Conditions: Cooling Indoor 27°C DB / 19°C WB. Cooling Outdoor 35°C DB / 24°C WB. Heating Indoor 20°C DB. Heating Outdoor 7°C DB / 6°C WB.
DB: Dry Bulb; WB: Wet Bulb

1) EER and COP classification is at 400 V in accordance with EU directive 2002/31/EC.
Specifications subject to change without notice.
For detailed information about ErP, please visit our page http://www.ptc.panasonic.eu



U-18ME1E81 // U-20ME1E81

Technical focus

- Bigger capacity in one casing
- Longer Max piping length up to 1,000 m
- Extended operating range to provide heating at outdoor temperature as low as -25°C
- Suitable for refurbishment projects (Refer to technical data book)

Compact design

2-Pipe ECOi 6N series has reduced the installation space required by 1 chassis for sizes up to 20 HP.

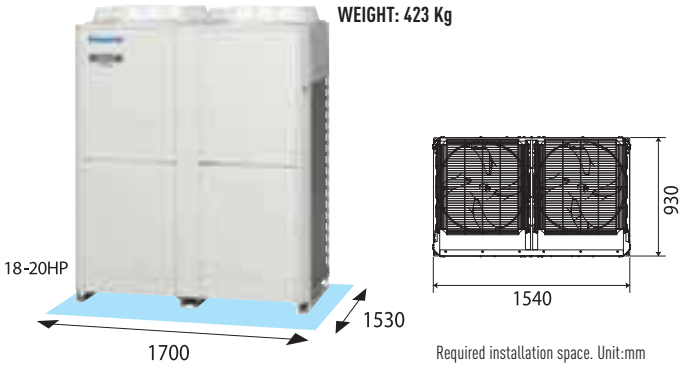

Required installation space. Unit:mm

FRONT VIEW

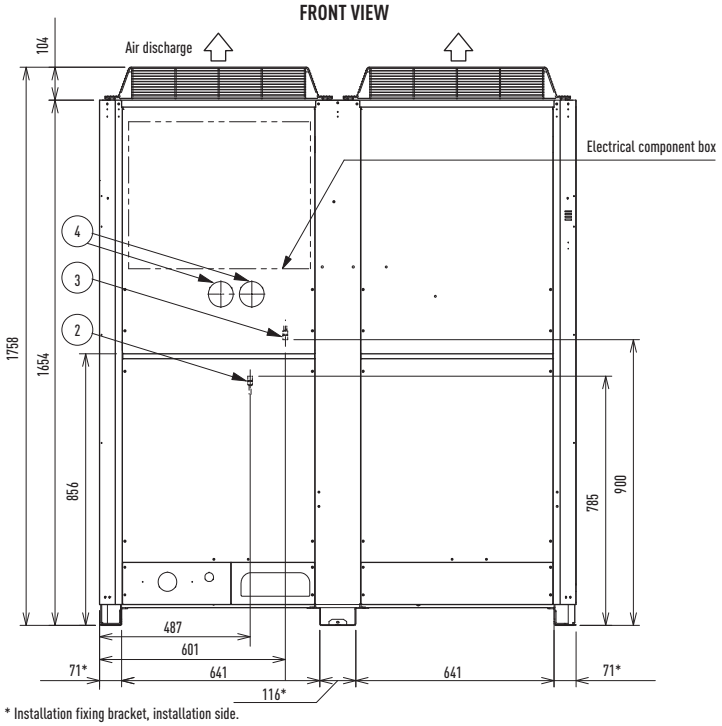

* Installation fixing bracket, installation side.

TOP VIEW

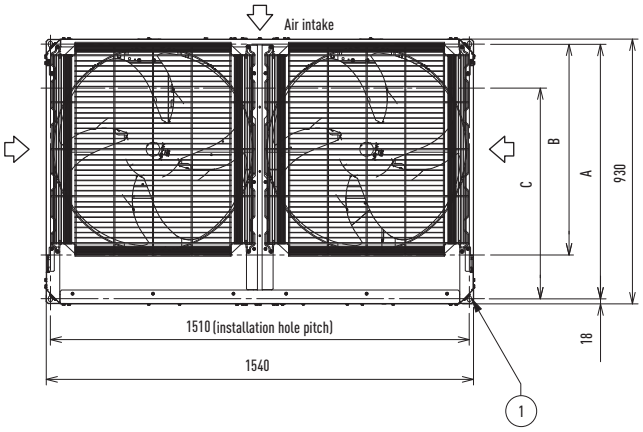

A	894 (installation hole pitch). The tubing is routed out frpm the front
B	730 (installation hole pitch). The tubing is routed out frpm the front
C	730 (installation hole pitch)
1	Installation holes (8-15x21 elongated holes) anchor bolts M12 or larger
2	Pressure outlet port (for high pressure: Ø 7.94 Scrader-type connection)
3	Pressure outlet port (for low pressure: Ø 7.94 Scrader-type connection)
4	Knock-out hole for connecting pressure gauge (optional)
5	Terminal board
6	Terminal board (for inter-outdoor-unit control wiring)

2-PIPE ECOi 6N SERIES
HIGH COP SETTING MODEL COMBINATION FROM 18 TO 48 HP

Next generation VRF newly-redesigned!

- Wide range of systems now available to 48 HP
- Heating operation at outdoor temperatures down to –25°C
- Extended pipe runs of up to 180 m

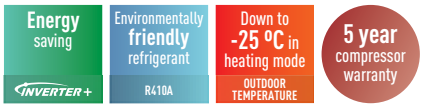

HP			18 HP	20 HP	22 HP	24 HP	26 HP	28 HP	30 HP
High COP setting model			U-14ME1E81 U-8ME1E81	U-16ME1E81 U-8ME1E81	U-18ME1E81 U-8ME1E81	U-16ME1E81 U-16ME1E81	U-18ME1E81 U-16ME1E81	U-20ME1E81 U-16ME1E81	U-20ME1E81 U-18ME1E81
Power supply			400 V / Three Phase / 50 Hz						
Cooling capacity		kW	50,0	56,0	61,5	68,0	73,0	78,5	85,0
EER [1]	**Nominal**	**W/W**	**4,07**	**4,06**	**3,97**	**4,07**	**4,01**	**3,96**	**3,94**
Operating current		A	18,9	21,2	23,9	25,8	28,1	30,6	33,4
Power input cooling		kW	12,3	13,8	15,5	16,7	18,2	19,8	21,6
Heating capacity		kW	56,0	63,0	69,0	76,5	81,5	87,5	95,0
COP [1]	**Nominal**	**W/W**	**4,52**	**4,50**	**4,39**	**4,45**	**4,38**	**4,42**	**4,40**
Operating current		A	19,1	21,5	24,2	26,6	28,7	30,6	33,4
Power input heating		kW	12,4	14,0	15,7	17,2	18,6	19,8	21,6
Starting current		A	86	90	101	94	105	111	114
External static pressure		Pa	80	80	80	80	80	80	80
Air volume		m^3/h	21.540	21.540	23.460	25.440	27.360	29.700	31.620
Sound pressure level	Normal mode	dB(A)	63,0	63,0	61,5	65,0	64,0	65,5	65,0
	Silent mode	dB(A)	60,0	60,0	58,5	62,0	61,0	62,5	62,0
Sound power level	Normal mode	dB	77,5	77,5	76,0	79,5	78,5	80,0	79,5
Dimensions	H x W x D	mm	1.758 x 1.830 x 930	1.758 x 1.830 x 930	1.758 x 2.370 x 930	1.758 x 2.060 x 930	1.780 x 2.600 x 930	1.780 x 2.600 x 930	1.758 x 3.140 x 930
Net weight		kg	537	537	653	614	730	730	846
Piping connections	Gas pipe	mm	28,58	28,58	28,58	28,58	31,75	31,75	31,75
	Liquid pipe	mm	15,88	15,88	15,88	15,88	19,05	19,05	19,05
	Balance pipe	mm	6,35	6,35	6,35	6,35	6,35	6,35	6,35
Demand control			13 steps (0 – 100 %)	13 steps (0 – 100 %)	13 steps (0 – 100 %)	13 steps (0 – 100 %)	13 steps (0 – 100 %)	13 steps (0 – 100 %)	13 steps (0 – 100 %)
Refrigerant amount at shipment		kg	15,0	15,0	15.5	17,0	17,5	17,5	18,0
Operating range	Cooling Min / Max	°C	-10°C DB / +43°C DB						
	Heating Min / Max	°C	-25°C WB / +15°C WB						

Rating Conditions: Cooling Indoor 27°C DB / 19°C WB. Cooling Outdoor 35°C DB / 24°C WB. Heating Indoor 20°C DB. Heating Outdoor 7°C DB / 6°C WB.
DB: Dry Bulb; WB: Wet Bulb

1) EER and COP classification is at 400 V in accordance with EU directive 2002/31/EC.
Specifications subject to change without notice.
For detailed information about ErP, please visit our page http://www.ptc.panasonic.eu



32 HP	34 HP	36 HP	38 HP	40 HP	42 HP	44 HP	46 HP	48 HP
U-20ME1E81 U-20ME1E81	U-18ME1E81 U-16ME1E81 U-8ME1E81	U-16ME1E81 U-16ME1E81 U-16ME1E81	U-18ME1E81 U-16ME1E81 U-16ME1E81	U-20ME1E81 U-16ME1E81 U-16ME1E81	U-20ME1E81 U-18ME1E81 U-16ME1E81	U-20ME1E81 U-18ME1E81 U-18ME1E81	U-20ME1E81 U-20ME1E81 U-18ME1E81	U-20ME1E81 U-20ME1E81 U-20ME1E81
400 V / Three Phase / 50 Hz								
90,0	96,0	101,0	107,0	113,0	118,0	124,0	130,0	135,0
3,88	**4,09**	**4,07**	**4,08**	**4,04**	**3,96**	**3,97**	**3,92**	**3,88**
35,9	36,2	38,3	40,5	43,3	46,1	48,3	51,4	53,8
23,2	23,5	24,8	26,2	28,0	29,8	31,2	33,2	34,8
100,0	108,0	113,0	119,0	127,0	132,0	138,0	145,0	150,0
4,41	**4,54**	**4,45**	**4,44**	**4,47**	**4,40**	**4,42**	**4,41**	**4,40**
35,1	36,7	39,2	41,4	43,9	46,4	48,3	50,9	52,8
22,7	23,8	25,4	26,8	28,4	30,0	31,2	32,9	34,1
116	113	107	118	124	127	130	131	134
80	80	80	80	80	80	80	80	80
33.960	36.180	38.160	40.080	42.420	44.340	46.260	48.600	50.940
66,0	64,5	66,5	66,0	67,0	66,5	66,0	67,0	67,5
63,0	61,5	63,5	63,0	64,0	63,5	63,0	64,0	64,5
80,5	79,0	81,0	80,5	81,5	81,0	80,5	81,5	82,0
1.758 x 3.140 x 930	1.758 x 3.430 x 930	1.758 x 3.120 x 930	1.758 x 3.660 x 930	1.758 x 3.660 x 930	1.758 x 4.200 x 930	1.758 x 4.740 x 930	1.758 x 4.740 x 930	1.758 x 4.740 x 930
846	960	921	1.037	1.037	1.153	1.269	1.269	1.269
31,75	31,75	38,10	38,10	38,10	38,10	38,10	38,10	38,10
19,05	19,05	19,05	19,05	19,05	19,05	19,05	19,05	19,05
6,35	6,35	6,35	6,35	6,35	6,35	6,35	6,35	6,35
13 steps (0 – 100 %)	13 steps (0 – 100 %)	13 steps (0 – 100 %)	13 steps (0 – 100 %)	13 steps (0 – 100 %)	13 steps (0 – 100 %)	13 steps (0 – 100 %)	13 steps (0 – 100 %)	13 steps (0 – 100 %)
18,0	24,0	25,5	26,0	26,0	26,5	27,0	27,0	27,0
-10°C DB / +43°C DB								
-25°C WB / +15°C WB								

U-8ME1E81 // U-12ME1E81 // U-14ME1E81 // U-16ME1E81 // U-18ME1E81 // U-20ME1E81 COMBINATION

Technical focus

- Increased connectable I_U/O_U cap. ratio up to 200%
- Increased Max no. of connectable I_U up to 64 units
- Increased high external static pressure up to 80 Pa
- Extended operating range to provide heating at outdoor temperature as low as -25°C



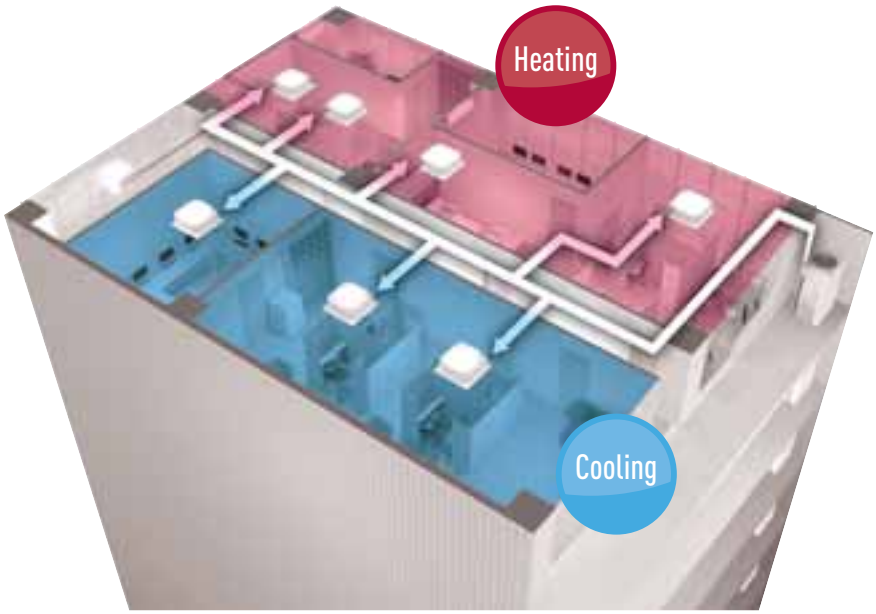

3-Pipe ECOi MF2 6N Series

Simultaneous heating and cooling VRF system

The New Panasonic 3-Pipe MF2 series offers the best solution for the most demanding customers.

- The new 3-Pipe units have only one chassis size, with a very small footprint (only 0.93 m^2)
- 1 body for all sizes: H1.758 x W1.000 x D930mm, for 8, 10, 12, 14 and 16 HP
- Maximum capacity size as 48 HP by 3 unit combinations (16 HP x 3 = 48 HP)
- Up to 52 indoor units connectable
- Maximun capacity ratio of 150%



Large combination of outdoor units, up to 48 HP

	System (HP)																			
Inverter unit	8	10	12	14	16	18	20	22	24	26	28	30	32	34	36	38	40	42	44	46	48
8	1					1	1	1	1					1	1	1	1				
10		1				1															
12			1				1			1				1							
14				1				1		1	2	1		1	2	1		3	2	1	
16					1				1			1	2			1	2		1	2	3

High efficiency combination

	System (HP)					
Inverter unit	16	24	26	28	30	32
8	2	3	2	2	2	1
10			1			
12				1		2
14					1	

Market-leading COP (at full load), standard efficiency

COP

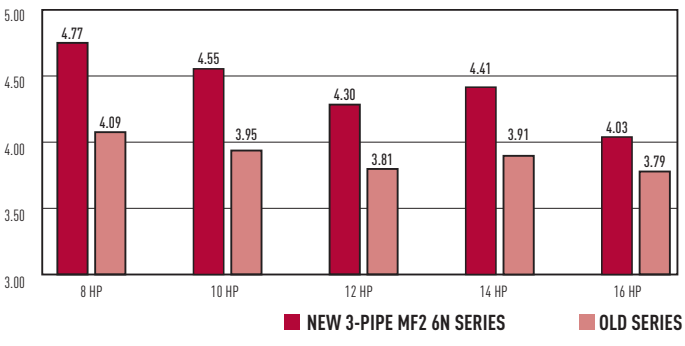

EER

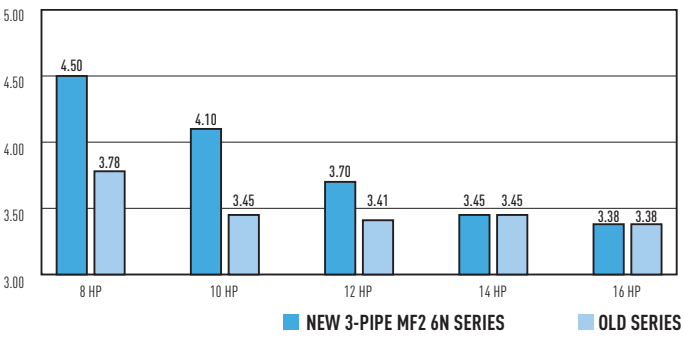

3-Pipe ECOi MF2 6N Series

Connectable indoor/outdoor unit capacity ratio up to 150%

Extended operating range

Cooling operation range: The cooling operation range has been extended to -10°C by changing the outdoor fan to an inverter type.

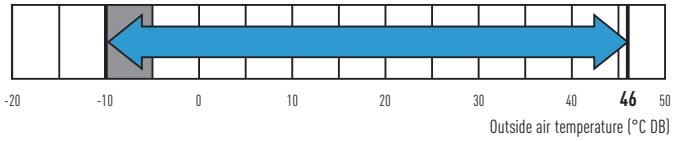

Heating operation range: Stable heating operation even with an outside air temperature of -20°C. The heating operation range has been extended to -20°C by use of a compressor with a high-pressure vessel.

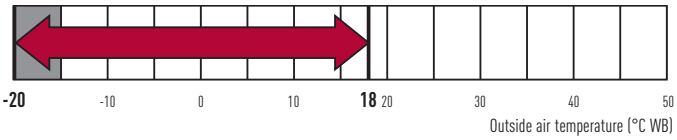

Wide temperature setting range

Wired remote control heating temperature setting range is 16 to 30°C.

Increased piping lengths and design flexibility

Adaptable to various building types and sizes. Actual piping length: 180 m.
Maximum piping length: 500 m.

MAXIMUM TOTAL LENGTH: 500 m

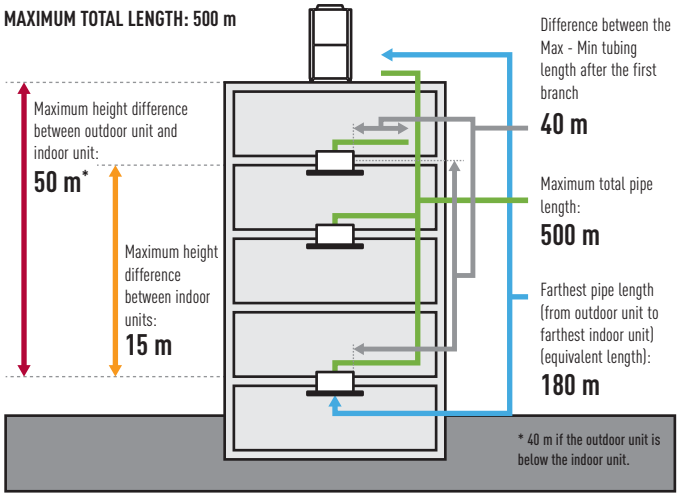

Compact design for superb space saving and low noise level

5 types of outdoor units with different capacities have been standardized to one compact casing.
Uniquely constructed with two compartments, the upper chamber contains the heat exchange, with the lower chamber stores the compressors. The benefits are two-fold - superb space saving and low noise level.

INSTALLATION SPACE: 0.93 m²

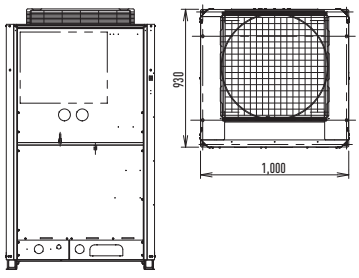

OPERATING SOUND dB(A)

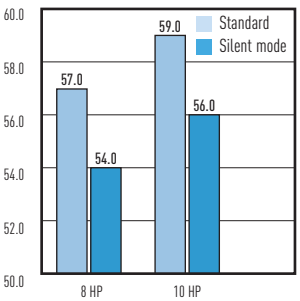

Solenoid valve kit

Oil-recovery operation to gives more stable comfort air-conditioning control.

3-PIPE CONTROL SOLENOID VALVE KIT



CZ-P56HR3
Up to 5.6 kW
CZ-P160HR3
From 5.7 to 16 kW

KIT-P56HR3
(CZ-P56HR3+CZ-CAPE2)
KIT-P160HR3
(CZ-P160HR3+CZ-CAPE2)

3-PIPE CONTROL PCB



3-Pipe control PCB CZ-CAPE2*.
Must be added to the CZ-P56HR3 OR CZ-P160HR3.
* For wall mounted.

VALVE DIMENSIONS

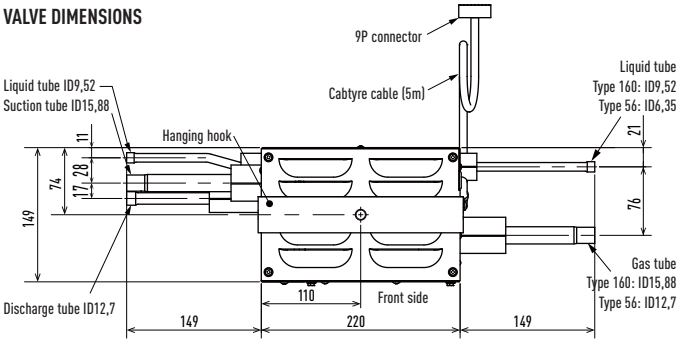

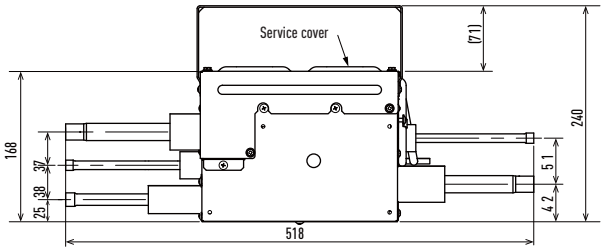

Individual control of multiple indoor units with solenoid valve kits

- Any design and layout can be used in a single system.
- Cooling operation is possible up to an outdoor temperature of -10°C.

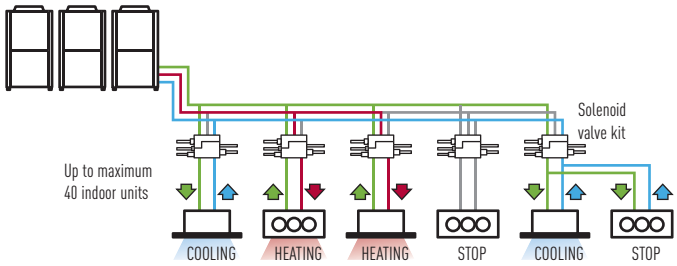

Liquid pipe (medium-temperature, medium-pressure liquid pipe)
Discharge pipe (high-temperature, high-pressure gas pipe)
Suction pipe (low-temperature, low-pressure gas pipe)
Individual control

Non-stop operation during maintenance

Even when an indoor unit needs maintenance, the other indoor units can be kept operating by setting. (Not applicable for all situations)

Power suppression control for energy saving (Demand control)[1]

The 3-Pipe ECOi MF2 6N Series has a built-in demand function which uses the inverter characteristics. With this demand function, the power consumption can be set in three steps, and operation[2] at optimum performance is performed according to the setting and the power consumption. This function is useful to reduce the annual power consumption and to save electricity costs while maintaining comfort.

1 An outdoor Seri-Para I/O unit is required for demand input.
2 Setting is possible as 0% or in the range from 40 to 100% (in steps of 5%). At the time of shipping, setting has been done to the three steps of 0%, 70%, and 100%.

Excellent cost saving and smaller piping size

By using R410a with low pressure loss, pipe sizes for discharge, suction and liquid are all reduced.
This makes it possible to aim for reduced piping space, improved workability at the site, and reduction of the piping material costs.

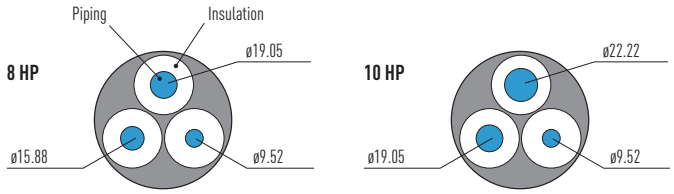

3-Pipe ECOi MF2			
HP	Suction pipe	Discharge pipe	Liquid pipe
8	Ø 19.05	Ø 15.88	Ø 9.52
10	Ø 22.22	Ø 19.05	Ø 9.52

Extended compressor life

The total operation time of the compressors is monitored by a microcomputer, so that there is no imbalance for the operation times of all compressors in the same refrigerant system, and compressors with a shorter operation time are operated with preference.

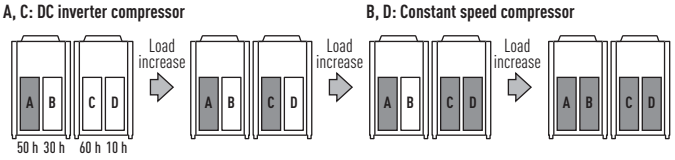

ECOi 2-Pipe and 3-Pipe wind protection shield

PAW-WPH1	1 long side of the outdoor unit (624 x 983 x 489)
PAW-WPH2	1 long side of the outdoor units (853 x 983 x 489)
PAW-WPH3	2 long sides of the outdoor units (744 x 983 x 289) (2ER SET)

Piping design

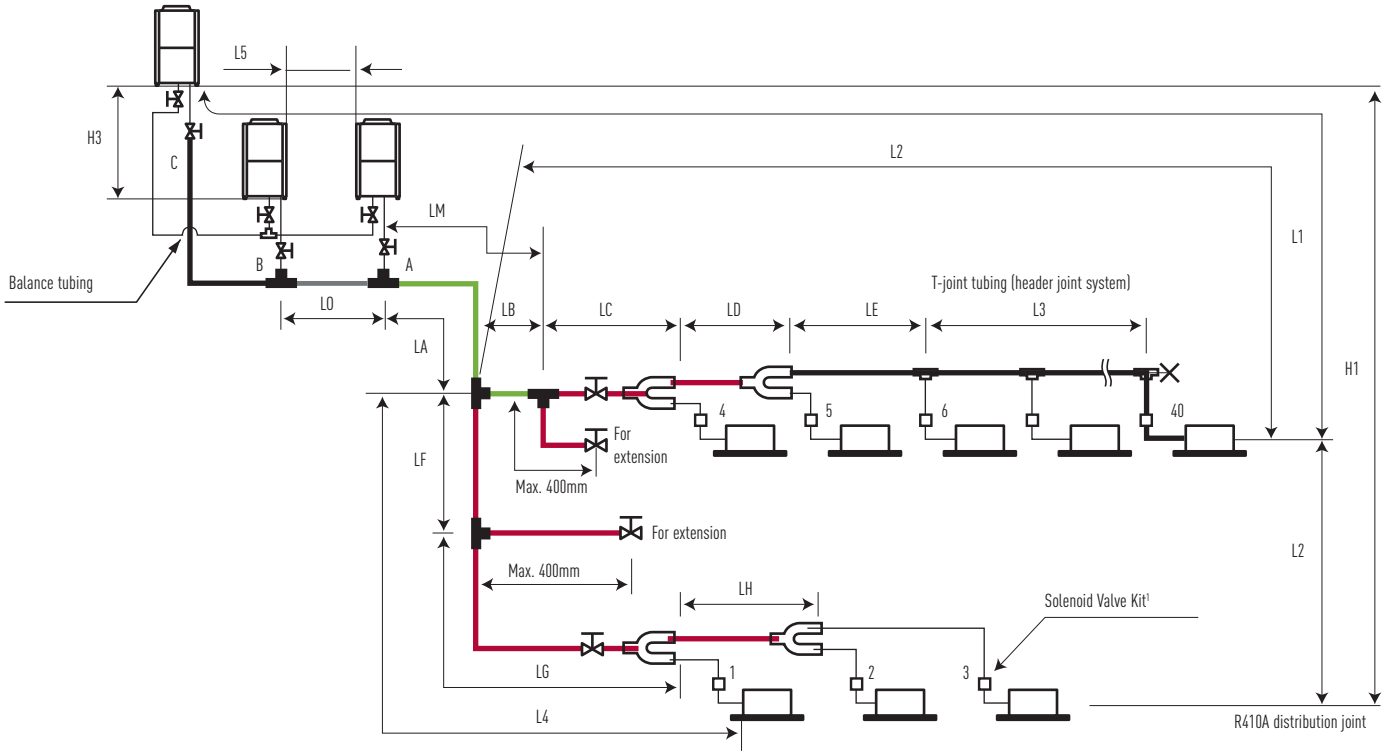

Main piping length
LM = LA + LB···

Main distribution pipes LC-LH are selected according to the capacity after the distribution joint.

Size of indoor unit connection piping 1-40 is determined by the connection piping size on the indoor units.

Distribution joint (CZ, option).

Ball valve (BV, option)

T-joint (field supply)

Solidly welded shut (pinch weld)

The outdoor connection main tubing (LO portion) is determined by the total capacity of the outdoor units that are connected to the tube end.

Note: Do not use commercial T-pieces for the liquid pipes of the distribution joint.

Ranges that apply to refrigerant piping lengths and to differences in installation heights				
Items	Marks	Contents		Length (m)
Allowable piping length	L1	Maximum piping length	Actual piping length	≤180[1]
			Equivalent piping length	≤200
	Δ L (L2–L4)	Difference between the Maximum length and the minimum length from the No. 1 distribution		≤40
	LM	Maximum length of main piping (at Maximum diameter)		—[2]
	ℓ1, ℓ2~ℓ40	Maximum length of each distribution		≤30
	L1+ℓ1+ℓ2...ℓ39+ℓA+ℓB+LF+LG+LH	Total Maximum piping length including length of each distribution (only liquid tubing)		≤500[3]
	L5	Distance between outdoor units		≤10
Allowable elevation difference	H1	When outdoor unit is installed higher than indoor unit		≤50
		When outdoor unit is installed lower than indoor unit		≤40
	H2	Maximum difference between indoor units		≤15
	H3	Maximum difference between outdoor units		≤4
Allowable length of joint tubing	L3	T-joint tubing (field-supply); Maximum tubing length between the first T-joint and solidly welded-shut end point		≤2

L = Length, H = Height
1) If the longest tubing length (L1) exceeds 90 m (equivalent length), increase the sizes of the main tubes (LM) by 1 rank for the discharge tubes, suction tubes, and narrow tubes. (field supplied).
2) If the longest main tube length (LM) exceeds 50 m, increase the main tube size at the portion before 50 m by 1 rank for the suction tubes and discharge tubes. (field supplied).
(For the portion that exceeds 50 m, set based on the main tube sizes (LA) listed in the table on the following page).
3) 24 HP - 30HP of high efficiency combination is 300 m.

3-PIPE ECOi MF2
6N SERIES
8-16 HP

With simultaneous heating and cooling operation heat recovery type

ECOi 3-Pipe is one of the most advanced VRF systems available. Not only offering high-efficiency and performance for simultaneous heating and cooling, but also its sophisticated installation and maintenance much easier.

- Achieves COP 4.77 as the top class in the industry (Average cooling and heating value for 8 HP outdoor unit).
- Simultaneous cooling or heating operation for up to 52 indoor units.
- Small installation space, top class in the industry.
- Rotation operation function and back-up operation function provided.

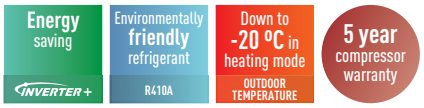

HP			8 HP	10 HP	12 HP	14 HP	16 HP
Standard model			**U-8MF2E8**	**U-10MF2E8**	**U-12MF2E8**	**U-14MF2E8**	**U-16MF2E8**
Power supply			380 / 400 / 415 V - Three Phase / 50 Hz	380 / 400 / 415 V - Three Phase / 50 Hz	380 / 400 / 415 V - Three Phase / 50 Hz	380 / 400 / 415 V - Three Phase / 50 Hz	380 / 400 / 415 V - Three Phase / 50 Hz
Cooling capacity		kW	22,4	28,0	33,5	40,0	45,0
EER [1]	**Nominal**	W/W	4,50	4,10	3,70	3,45	3,38
Running current	380 / 400 / 415 V	A	8,60 / 8,20 / 8,00	11,3 / 10,8 / 10,6	15,1 / 14,5 / 14,1	19,2 / 18,4 / 17,9	22,0/ 21,1 / 20,6
Power input		kW	4,98	6,83	9,05	11,00	13,00
Heating capacity		kW	25,0	31,5	37,5	45,0	50,0
COP [1]	**Nominal**	W/W	4,77	4,55	4,30	4,41	4,03
Running current	380 / 400 / 415 V	A	8,95 / 8,50 / 8,30	11,6 / 11,0 / 10,7	14,7 / 14,1 / 13,8	17,0 / 16,4 / 15,9	20,7 / 19,9 / 19,4
Power input		kW	5,24	6,92	8,72	10,2	12,4
Air volume		m^3/min	158	178	212	212	212
Sound pressure level	High / Low	dB(A)	57,0 / 54,0	59,0 / 56,0	61,0 / 58,0	62,0 / 59,0	62,0 / 59,0
Sound power level	Normal mode	dB	71,5 / 68,5	73,5 / 70,5	75,5 / 72,5	76,5 / 73,5	76,5 / 73,5
Dimensions	H x W x D	mm	1.758 x 1.000 x 930	1.758 x 1.000 x 930	1.758 x 1.000 x 930	1.758 x 1.000 x 930	1.758 x 1.000 x 930
Net weight		kg	269	269	314	322	322
Piping connections	Suction pipe	mm (Inch)	19,05 (3/4)	22,22 (7/8)	25,40 (1)	25,40 (1)	28,58 (1-1/8)
	Discharge pipe	mm (Inch)	15,88 (5/8)	19,05 (3/4)	19,05 (3/4)	22,22 (7/8)	22,22 (7/8)
	Liquid pipe	mm (Inch)	9,52 (3/8)	9,52 (3/8)	12,70 (1/2)	12,70 (1/2)	12,70 (1/2)
	Balance pipe	mm (Inch)	6,35 (1/4)	6,35 (1/4)	6,35 (1/4)	6,35 (1/4)	6,35 (1/4)
Refrigerant amount at shipment		kg	8,3	8,5	8,8	9,3	9,3
Operating range	Cooling Min / Max	°C	-10°C DB / +46°C DB	-10°C DB / +46°C DB	-10°C DB / +46°C DB	-10°C DB / +46°C DB	-10°C DB / +46°C DB
	Heating Min / Max	°C	-20°C WB / +18°C WB	-20°C WB / +18°C WB	-20°C WB / +18°C WB	-20°C WB / +18°C WB	-20°C WB / +18°C WB
	Simultaneous operation	°C	-10°C DB / +24°C DB	-10°C DB / +24°C DB	-10°C DB / +24°C DB	-10°C DB / +24°C DB	-10°C DB / +24°C DB

Solenoid valve kit		
KIT-P56HR3	KIT-P56HR3	3-Pipe control Solenoid valve kit (up to 5,6kW)
	CZ-P56HR3	Solenoid valve kit (up to 5,6kW)
	CZ-CAPE2	3-Pipe control PCB
KIT-P160HR3	KIT-P160HR3	3-Pipe control Solenoid valve kit (from 5,6kW to 10,6kW)
	CZ-P160HR3	Solenoid valve kit (from 5,6kW to 10,6kW)
	CZ-CAPE2	3-Pipe control PCB
CZ-CAPEK2		3-Pipe control PCB for wall mounted

Rating Conditions: Cooling Indoor 27°C DB / 19°C WB. Cooling Outdoor 35°C DB / 24°C WB. Heating Indoor 20°C DB. Heating Outdoor 7°C DB / 6°C WB.
DB: Dry Bulb; WB: Wet Bulb

1) EER and COP classification is at 400 V in accordance with EU directive 2002/31/EC.
Specifications subject to change without notice.
For detailed information about ErP, please visit our page http://www.ptc.panasonic.eu



U-8MF2E8 // U-10MF2E8 // U-12MF2E8 // U-14MF2E8 // U-16MF2E8

Technical focus

- Standardization of O_U to one compact casing size
- Improved operation efficiency
- The constant-speed compressor adopts a high-performance internal high-pressure scroll
- Improvement of the heat exchanger
- Redesign of structural parts
- Close side-by-side installation is possible

System limitations

Maximum number of combined outdoor units	3
Maximum HP of combined outdoor units	135 kW (48 HP)
Maximum number of connectable indoor units	52
Indoor/outdoor unit capacity ratio	50 -150%

Additional refrigerant charge

Liquid piping size	6.35	9.52	12.7	15.88	19.05	22.22	25.40
Amount of refrigerant charge (g/m)	26	56	128	185	259	366	490

Refrigerant piping

Piping size (mm)							
O material	Outer diameter	6.35	9.52	12.70	15.88	19.05	22.22
	Wall thickness	0.80	0.80	0.80	1.00	1.00	1.15
1/2 H, H material	Outer diameter	25.40	28.58	31.75	38.10	41.28	
	Wall thickness	1.00	1.00	1.10	over 1.35	over 1.45	

Note: When pipe bending is to be performed, the bending radius shall be at least 4 times the outer diameter. Also, take sufficient care to prevent pipe collapse and damage at the time of bending.

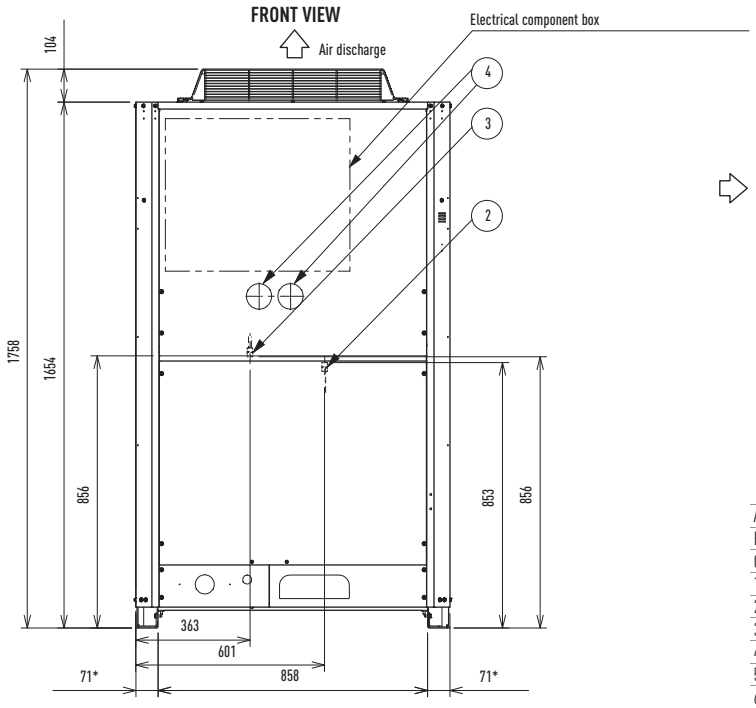

* Installation fixing bracket, installation side.

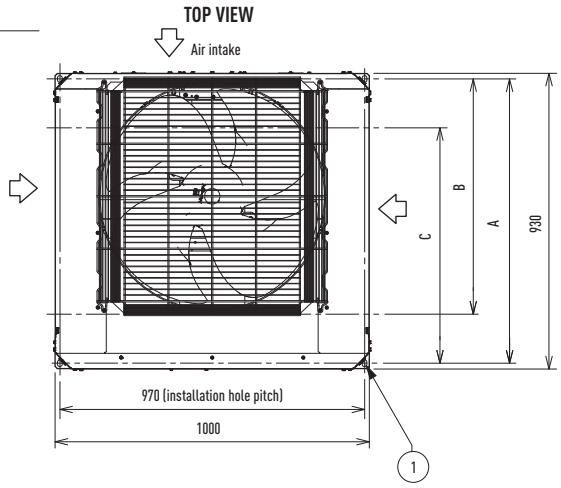

A	894 (installation hole pitch). The tubing is routed out frpm the front
B	730 (installation hole pitch). The tubing is routed out frpm the front
C	730 (installation hole pitch)
1	Installation holes (8-15x21 elongated holes) anchor bolts M12 or larger
2	Pressure outlet port (for high pressure: Ø 7.94 Scrader-type connection)
3	Pressure outlet port (for low pressure: Ø 7.94 Scrader-type connection)
4	Knock-out hole for connecting pressure gauge (optional)
5	Terminal board
6	Terminal board (for inter-outdoor-unit control wiring)

3-PIPE ECOi MF2
6N SERIES
COMBINATION FROM 18 TO 48 HP

With simultaneous heating and cooling operation heat recovery type

ECOi 3-Pipe is one of the most advanced VRF systems available. Not only offering high-efficiency and performance for simultaneous heating and cooling, its sophisticated design makes installation and maintenance much easier.

- Achieves COP 4,63 as the top class in the industry (Average cooling and heating value for 18 HP outdoor unit).
- Simultaneous cooling or heating operation for up to 52 indoor units.
- Small installation space, top class in the industry.
- Rotation operation function and back-up operation function provided.

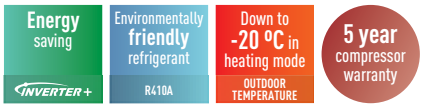

HP			18 HP	20 HP	22 HP	24 HP	26 HP	28 HP	30 HP
Standard model			U-8MF2E8 U-10MF2E8	U-8MF2E8 U-12MF2E8	U-8MF2E8 U-14MF2E8	U-8MF2E8 U-16MF2E8	U-12MF2E8 U-14MF2E8	U-14MF2E8 U-14MF2E8	U-14MF2E8 U-16MF2E8
Power supply			380 / 400 / 415 V - Three Phase / 50 Hz						
Cooling capacity		kW	50,4	56,0	61,5	68,0	73,0	78,5	85,0
EER [1]	Nominal	W/W	4,27	3,97	3,80	3,68	3,58	3,49	3.41
Running current	380 / 400 / 415 V	A	19,7 / 18,9 / 18,4	23,8 / 22,9 / 22,3	27,0 / 26,0 / 25,3	30,9 / 29,7 / 28,9	33,7 / 32,4 / 31,5	37,2 / 35,7 / 34,8	41,1 / 39,5 / 38,5
Power input		kW	11,8	14,1	16,2	18,5	20,4	22,5	24.90
Heating capacity		kW	56,5	63,0	69,0	76,5	81,5	87,5	95,0
COP [1]	Nominal	W/W	4,63	4,47	4,57	4,20	4,38	4,49	4,20
Running current	380 / 400 / 415 V	A	20,4 / 19,6 / 19,1	23,8 / 22,9 / 22,3	25,2 / 24,2 / 23,6	30,4 / 29,2 / 28,5	31,1 / 29,8 / 29,1	32,6 / 31,3 / 30,5	37,7 / 36,2 / 35,3
Power input		kW	12,2	14,1	15,1	18,2	18,6	19,5	22,6
Air volume		m^3/min	336	370	370	370	424	424	424
Sound pressure level	High / Low	dB(A)	61,0 / 58,0	62,5 / 59,5	63,0 / 60,0	63,0 / 60,0	64,5 / 61,5	65,0 / 62,0	65,0 / 62,0
Sound power level	Normal mode	dB	75,5 / 72,5	77,0 / 74,0	77,5 / 74,5	77,5 / 74,5	79,0 / 76,0	79,5 / 76,5	79,5 / 76,5
Dimensions	H x W x D	mm	1.758 x 2.060 x 930	1.758 x 2.060 x 930	1.758 x 2.060 x 930	1.758 x 2.060 x 930	1.758 x 2.060 x 930	1.758 x 2.060 x 930	1.758 x 2.060 x 930
Net weight		kg	538	538	591	591	636	644	644
Piping connections	Suction pipe	mm (Inch)	28,58 (1-1/8)	28,58	28,58	28,58	31,75 (1-1/4)	31,75	31,75
	Discharge pipe	mm (Inch)	22,22 (7/8)	22,22	25,40 (1)	25,40	25,40	28,58	28,58
	Liquid pipe	mm (Inch)	15,88 (5/8)	15,88	15,88	15,88	19,05 (3/4)	19,05	19,05
	Balance pipe	mm (Inch)	6,35 (1/4)	6,35 (1/4)	6,35 (1/4)	6,35 (1/4)	6,35 (1/4)	6,35 (1/4)	6,35 (1/4)
Refrigerant amount at shipment		kg	16,8	17,1	17,6	17,6	18,1	18,6	18,6
Operating range	Cooling Min / Max	°C	-10°C DB / +46°C DB	-10°C DB / +46°C DB	-10°C DB / +46°C DB	-10°C DB / +46°C DB	-10°C DB / +46°C DB	-10°C DB / +46°C DB	-10°C DB / +46°C DB
	Heating Min / Max	°C	-20°C WB / +18°C WB	-20°C WB / +18°C WB	-20°C WB / +18°C WB	-20°C WB / +18°C WB	-20°C WB / +18°C WB	-20°C WB / +18°C WB	-20°C WB / +18°C WB
	Simultaneous operation	°C	-10°C DB / +24°C DB	-10°C DB / +24°C DB	-10°C DB / +24°C DB	-10°C DB / +24°C DB	-10°C DB / +24°C DB	-10°C DB / +24°C DB	-10°C DB / +24°C DB

Solenoid valve kit		
KIT-P56HR3	KIT-P56HR3	3-Pipe control Solenoid valve kit (up to 5,6kW)
	CZ-P56HR3	Solenoid valve kit (up to 5,6kW)
	CZ-CAPE2	3-Pipe control PCB
KIT-P160HR3	KIT-P160HR3	3-Pipe control Solenoid valve kit (from 5,6kW to 10,6kW)
	CZ-P160HR3	Solenoid valve kit (from 5,6kW to 10,6kW)
	CZ-CAPE2	3-Pipe control PCB
CZ-CAPEK2		3-Pipe control PCB for wall mounted

Rating Conditions: Cooling Indoor 27°C DB / 19°C WB. Cooling Outdoor 35°C DB / 24°C WB. Heating Indoor 20°C DB. Heating Outdoor 7°C DB / 6°C WB.
DB: Dry Bulb; WB: Wet Bulb

1) EER and COP classification is at 400 V in accordance with EU directive 2002/31/EC.
Specifications subject to change without notice.
For detailed information about ErP, please visit our page http://www.ptc.panasonic.eu



32 HP	34 HP	36 HP	38 HP	40 HP	42 HP	44 HP	46 HP	48 HP
U-16MF2E8 U-16MF2E8	U-8MF2E8 U-12MF2E8 U-14MF2E8	U-8MF2E8 U-14MF2E8 U-14MF2E8	U-8MF2E8 U-14MF2E8 U-16MF2E8	U-8MF2E8 U-16MF2E8 U-16MF2E8	U-14MF2E8 U-14MF2E8 U-14MF2E8	U-14MF2E8 U-14MF2E8 U-16MF2E8	U-14MF2E8 U-16MF2E8 U-16MF2E8	U-16MF2E8 U-16MF2E8 U-16MF2E8
380 / 400 / 415 V - Three Phase / 50 Hz								
90,0	96,0	101,0	107,0	113,0	118,0	124,0	130,0	135,0
3.38	3,74	3,66	3,60	3,55	3,48	3,43	3,40	3,38
43,9 / 42,2 / 41,1	42,9 / 41,2 / 39,7	46,1 / 44,3 / 43,1	49,6 / 47,6 / 46,4	53,1 / 51,0 / 49,7	56,0 / 53,8 / 52,4	59,6 / 57,3 / 55,8	63,8 / 61,3 / 59,7	65,9 / 63,3 / 61,7
26,6	25,7	27,6	29,7	31,8	33,9	36,1	38,2	39,9
100,0	108,0	113,0	119,0	127,0	132,0	138,0	145,0	150,0
4,03	4,44	4,52	4,33	4,12	4,46	4,30	4,14	4,03
41,7 / 40,1 / 39,1	41,0 / 39,4 / 38,4	41,6 / 39,9 / 38,9	46,1 / 44,3 / 43,1	52,2 / 49,6 / 47,8	49,3 / 47,3 / 46,1	53,8 / 51,6 / 50,3	58,8 / 56,5 / 55,0	62,6 / 60,1 / 58,6
24,8	24,3	25,0	27,5	30,8	29,6	32,1	35,0	37,2
424	582	582	582	582	636	636	636	636
65,0 / 62,0	65,0 / 62,0	65,5 / 62,5	65,5 / 62,5	65,5 / 62,5	67,0 / 64,0	67,0 / 64,0	67,0 / 64,0	67,0 / 64,0
79,5 / 76,5	79,5 / 76,5	80,0 / 77,0	80,0 / 77,0	80,0 / 77,0	81,5 / 78,5	81,5 / 78,5	81,5 / 78,5	81,5 / 78,5
1.758 x 2.060 x 930	1.758 x 3.120 x 930	1.758 x 3.120 x 930	1.758 x 3.120 x 930	1.758 x 3.120 x 930	1.758 x 3.120 x 930	1.758 x 3.120 x 930	1.758 x 3.120 x 930	1.758 x 3.120 x 930
644	905	913	913	913	966	966	966	966
31,75	31,75	38,10 (1-1/2)	38,10	38,10	38,10	38,10	38,10	38,10
28,58	28,58	28,58	31,75	31,75	31,75	31,75	31,75	31,75
19,05	19,05	19,05	19,05	19,05	19,05	19,05	19,05	19,05
6,35 (1/4)	6,35 (1/4)	6,35 (1/4)	6,35 (1/4)	6,35 (1/4)	6,35 (1/4)	6,35 (1/4)	6,35 (1/4)	6,35 (1/4)
18,6	26,4	26,9	26,9	26,9	27,9	27,9	27,9	27,9
-10°C DB / +46°C DB	-10°C DB / +46°C DB	-10°C DB / +46°C DB	-10°C DB / +46°C DB	-10°C DB / +46°C DB	-10°C DB / +46°C DB	-10°C DB / +46°C DB	-10°C DB / +46°C DB	-10°C DB / +46°C DB
-20°C WB / +18°C WB	-20°C WB / +18°C WB	-20°C WB / +18°C WB	-20°C WB / +18°C WB	-20°C WB / +18°C WB	-20°C WB / +18°C WB	-20°C WB / +18°C WB	-20°C WB / +18°C WB	-20°C WB / +18°C WB
-10°C DB / +24°C DB	-10°C DB / +24°C DB	-10°C DB / +24°C DB	-10°C DB / +24°C DB	-10°C DB / +24°C DB	-10°C DB / +24°C DB	-10°C DB / +24°C DB	-10°C DB / +24°C DB	-10°C DB / +24°C DB

U-8MF2E8 // U-10MF2E8 // U-12MF2E8 // U-14MF2E8 // U-16MF2E8 COMBINATION

Technical focus

- Standardization of O_U to one compact casing size
- Improved operation efficiency
- The constant-speed compressor adopts a high-performance internal high-pressure scroll
- Improvement of the heat exchanger
- Redesign of structural parts
- Close side-by-side installation is possible

SYSTEM EXAMPLE

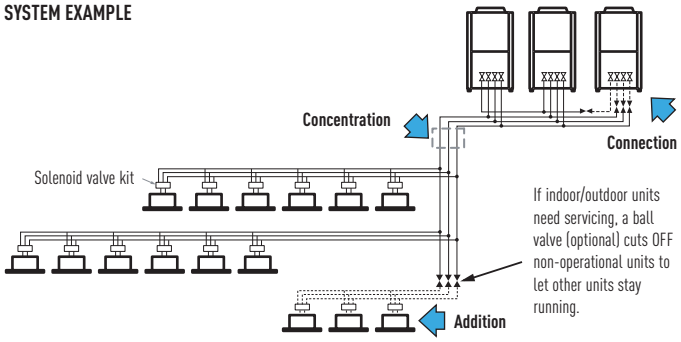

- Panasonic makes it possible to link outdoor units together for a large capacity (48 HP)
- Since all pipes are concentrated into one pipe shaft, you can minimise pipe space and construction labour.
- If your indoor capacity load changes in the future, it's easy to add on both indoor and outdoor units using the same pipings. If the additional instalment of outdoor and indoor units is expected, the size of refrigerant piping should be decided according to the total capacity after the addition.

3-PIPE ECOi MF2
6N SERIES
HIGH EFFICIENCY
COMBINATION 16 TO 32 HP

With simultaneous heating and cooling operation heat recovery type

ECOi 3-Pipe is one of the most advanced VRF systems available. Not only offering high-efficiency and performance for simultaneous heating and cooling, its sophisticated design makes installation and maintenance much easier.

- Achieves COP 4,76 as the top class in the industry (Average cooling and heating value for 8 HP outdoor unit).
- Simultaneous cooling or heating operation for up to 52 indoor units.
- Small installation space, top class in the industry.
- Rotation operation function and back-up operation function provided.

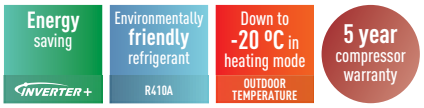

HP			16 HP	24 HP	26 HP	28 HP	30 HP	32 HP
High Efficiency model			**U-8MF2E8** **U-8MF2E8**	**U-8MF2E8** **U-8MF2E8** **U-8MF2E8**	**U-8MF2E8** **U-8MF2E8** **U-10MF2E8**	**U-8MF2E8** **U-8MF2E8** **U-12MF2E8**	**U-8MF2E8** **U-8MF2E8** **U-14MF2E8**	**U-8MF2E8** **U-12MF2E8** **U-12MF2E8**
Power supply			380 / 400 / 415 V - Three Phase / 50 Hz	380 / 400 / 415 V - Three Phase / 50 Hz	380 / 400 / 415 V - Three Phase / 50 Hz	380 / 400 / 415 V - Three Phase / 50 Hz	380 / 400 / 415 V - Three Phase / 50 Hz	380 / 400 / 415 V - Three Phase / 50 Hz
Cooling capacity		kW	45,0	68,0	73,0	78,5	85,0	90,0
EER [1]	**Nominal**	W/W	4,50	4,47	4,32	4,11	3,94	3,86
Running current	380 / 400 / 415 V	A	17,3 / 16,4 / 16,0	26,2 / 24,9 / 24,3	28,5 / 27,4 / 26,7	32,2 / 31,0 / 30,2	36,5 / 35,0 / 34,1	38,9 / 37,4 / 36,4
Power input		kW	10,0	15,2	16,9	19,1	21,6	23,3
Heating capacity		kW	50,0	76,5	81,5	87,5	95,0	100,0
COP [1]	**Nominal**	W/W	4,76	4,72	4,68	4,56	4,59	4,41
Running current	380 / 400 / 415 V	A	17,9 / 17,0 / 16,6	27,7 / 26,3 / 25,6	29,4 / 27,9 / 27,5	32,4 / 31,1 / 30,4	35,0 / 33,6 / 32,7	38,3 / 36,8 / 35,9
Power input		kW	10,5	16,2	17,4	19,2	20,7	22,7
Air volume		m^3/min	316	474	494	528	528	582
Sound pressure level	High / Low	dB(A)	60,0 / 57,0	62,0 / 59,0	62,5 / 59,5	63,5 / 60,5	64,0 / 61,0	65,0 / 62,0
Sound power level	Normal mode	dB	74,5 / 71,5	76,5 / 73,5	77,0 / 74,0	78,0 / 75,0	78,5 / 75,5	79,5 / 76,5
Dimensions (Combination)	H x W x D	mm	1.758 x 2.060 x 930	1.758 x 3.120 x 930	1.758 x 3.120 x 930	1.758 x 3.120 x 930	1.758 x 3.120 x 930	1.758 x 3.120 x 930
Net weight		kg	538	807	807	852	860	897
Piping connections	Suction pipe	mm	28,58	28,58	31,75	31,75	31,75	31,75
	Discharge pipe	mm	22,22	25,40	25,40	28,58	28,58	28,58
	Liquid pipe	mm	12,70	15,88	19,05	19,05	19,05	19,05
	Balance pipe	mm	6,35	6,35	6,35	6,35	6,35	6,35
Refrigerant amount at shipment		kg	16,6	24,9	25,1	25,4	25,9	25,9
Operating range	Cooling Min / Max	°C	-10°C DB / +46°C DB	-10°C DB / +46°C DB	-10°C DB / +46°C DB	-10°C DB / +46°C DB	-10°C DB / +46°C DB	-10°C DB / +46°C DB
	Heating Min / Max	°C	-20°C WB / +18°C WB	-20°C WB / +18°C WB	-20°C WB / +18°C WB	-20°C WB / +18°C WB	-20°C WB / +18°C WB	-20°C WB / +18°C WB
	Simultaneous operation	°C	-10°C DB / +24°C DB	-10°C DB / +24°C DB	-10°C DB / +24°C DB	-10°C DB / +24°C DB	-10°C DB / +24°C DB	-10°C DB / +24°C DB

Solenoid valve kit		
KIT-P56HR3	KIT-P56HR3	3-Pipe control Solenoid valve kit (up to 5,6kW)
	CZ-P56HR3	Solenoid valve kit (up to 5,6kW)
	CZ-CAPE2	3-Pipe control PCB
KIT-P160HR3	KIT-P160HR3	3-Pipe control Solenoid valve kit (from 5,6kW to 10,6kW)
	CZ-P160HR3	Solenoid valve kit (from 5,6kW to 10,6kW)
	CZ-CAPE2	3-Pipe control PCB
CZ-CAPEK2		3-Pipe control PCB for wall mounted

Rating Conditions: Cooling Indoor 27°C DB / 19°C WB. Cooling Outdoor 35°C DB / 24°C WB. Heating Indoor 20°C DB. Heating Outdoor 7°C DB / 6°C WB.
DB: Dry Bulb; WB: Wet Bulb

1) EER and COP classification is at 400 V in accordance with EU directive 2002/31/EC.
Specifications subject to change without notice.
For detailed information about ErP, please visit our page http://www.ptc.panasonic.eu



U-8MF2E8 // U-10MF2E8 // U-12MF2E8 // U-14MF2E8 // U-16MF2E8 COMBINATION

Technical focus

- Standardization of O_U to one compact casing size
- Improved operation efficiency
- The constant-speed compressor adopts a high-performance internal high-pressure scroll
- Improvement of the heat exchanger
- Redesign of structural parts
- Close side-by-side installation is possible

Market-leading COP (at full load), standard efficiency

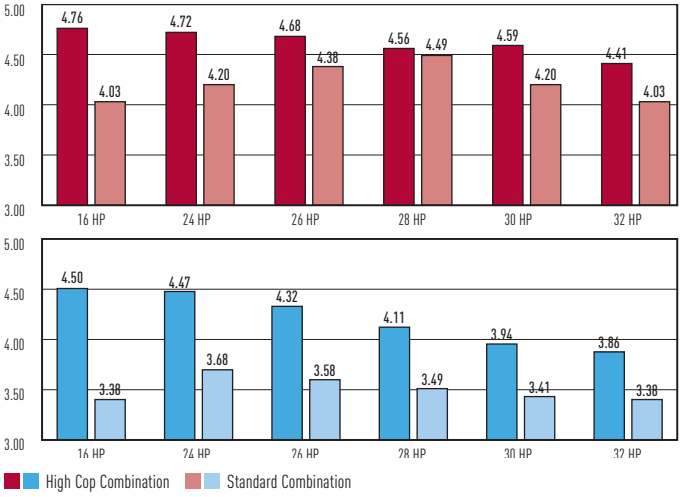

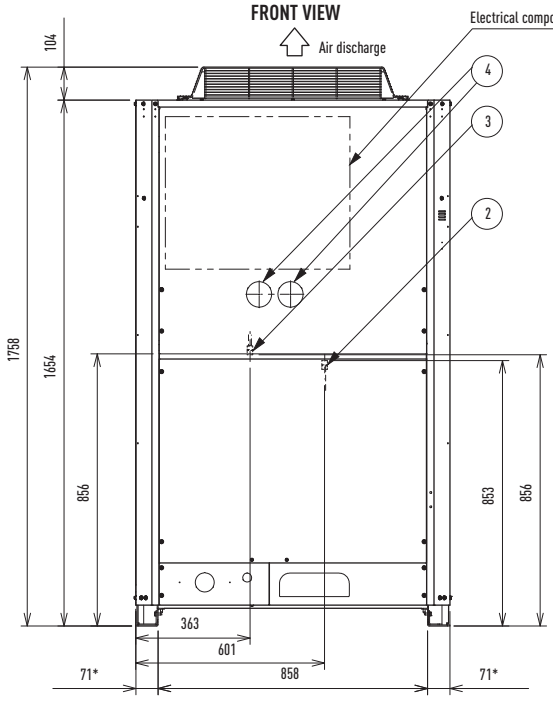

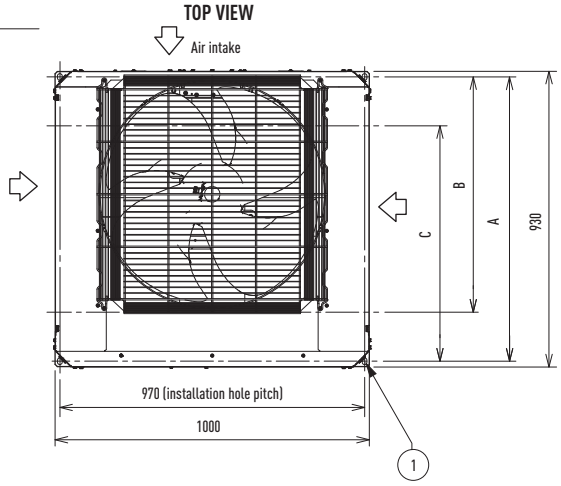

A	894 (installation hole pitch). The tubing is routed out frpm the front
B	730 (installation hole pitch). The tubing is routed out frpm the front
C	730 (installation hole pitch)
1	Installation holes (8-15x21 elongated holes) anchor bolts M12 or larger
2	Pressure outlet port (for high pressure: Ø 7.94 Scrader-type connection)
3	Pressure outlet port (for low pressure: Ø 7.94 Scrader-type connection)
4	Knock-out hole for connecting pressure gauge (optional)
5	Terminal board
6	Terminal board (for inter-outdoor-unit control wiring)

* Installation fixing bracket, installation side.

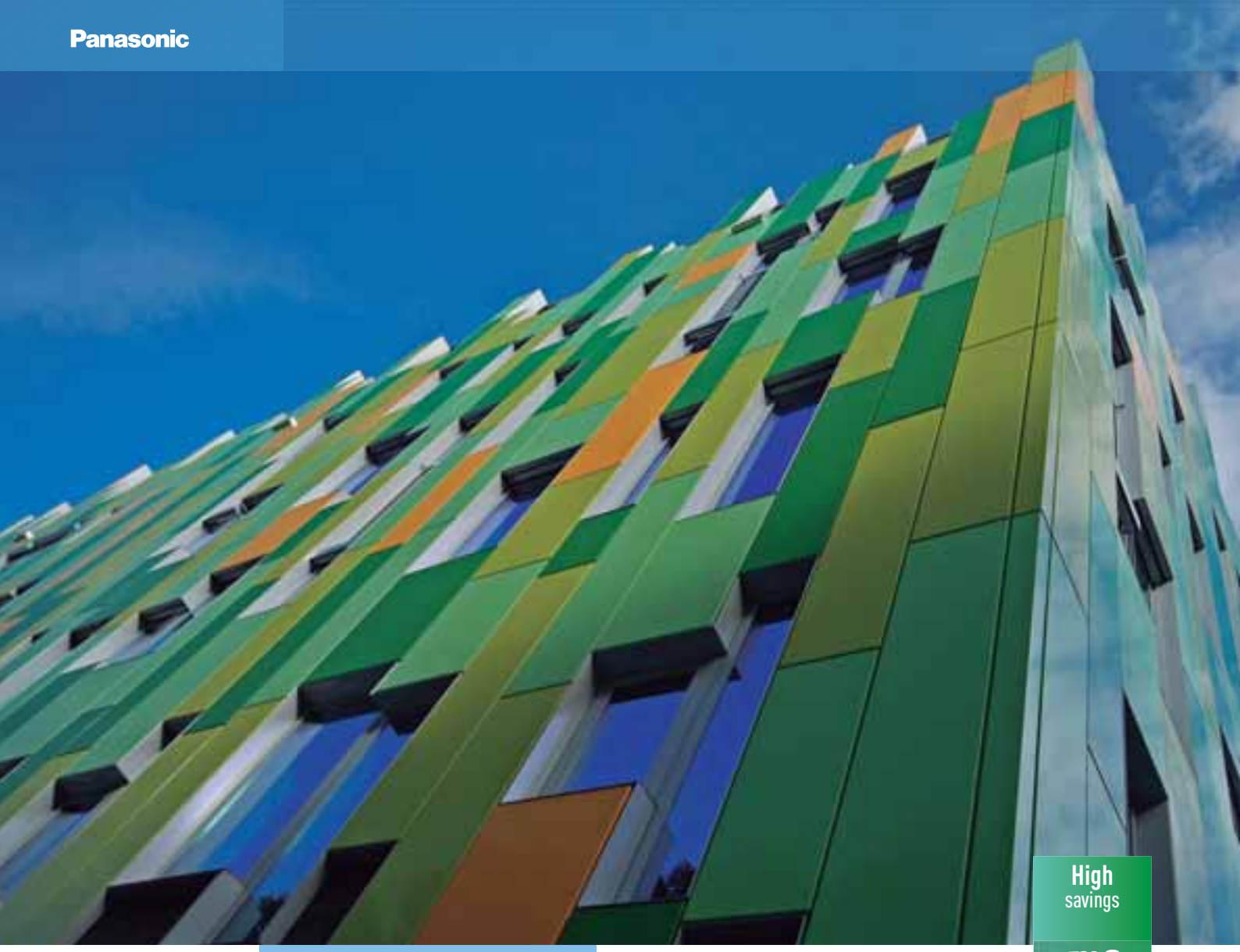

High savings

ECO G

Panasonic introducing the gas driven VRF

Panasonic's GHP range is extensive and covers the 2-Pipe and 3-Pipe system. Our GHP VRF range of commercial systems is leading the industry in the development of efficient and flexible systems, and is the natural choice for commercial projects, especially those where power restrictions apply. As you would expect, all our gas-driven VRF systems have the highest reliability rates in the industry and a leading customer service programme. The torque and rpm control functions of the GHP's motor are comparable with an inverter-type electric air conditioner. Thus, the GHP ensures individual, and efficient control and performance - just as you expect from an electric inverter controlled air conditioner.

Easy to position

- Up to 71 kW of cooling from a current consumption of 0,1 kW/h
- Single Phase power supply across the range
- The option of natural gas or LPG as its main power source
- Embedded Water Heat Exchanger to connect to domestic hot water systems 16–25 HP (2-Pipe units only)
- Option of DX or chilled water for indoor heat exchange
- Reduced CO_2 emissions

ECO G and ECO G Multi, S Series

The advanced Gas Driven VRF system offers increased efficiency and performance across the range. Now more powerful than ever before, it can connect up to 48 indoor units.
Improvements include increased part load performance, reduced gas consumption with a Miller-cycle engine and reduced electrical consumption by using DC fan motors.

ECO G High Power

1% this is what the new ECO G High Power is consuming versus your Electrical VRF. Your savings start now! Ideal for locations with low electricity grid, for chiller, ventilation and air conditioning application.

ECO G and ECO G Multi

The S Series 2-Pipe not only offers improved performance but also increased flexibility.

ECO G 3 Way

3 Way heat recovery system with simultaneous heating & cooling.



ECO G and ECO G Multi benefits

High-efficiency operation
All models are equipped with a high-performance air exchanger and a newly developed refrigerant heat exchanger for high efficiency operation, making them one of the most energy efficient solutions on the market.

Lowest nitrogen oxide emissions
The GHP VRF systems have the lowest nitrogen oxide emissions. In a pioneering development, the Panasonic GHP features a brand new lean-burn combustion system that utilises air fuel ratio feedback control to reduce NOx emissions to an all time low.

High performance
With its advanced heat exchanger design, this new GHP system offers improved efficiency and reduced running costs, which, coupled with improved engine management systems, have greatly improved the system COP rating.

Excellent economy
The Panasonic GHP provides quick and powerful cooling/heating and increases delivery of heat into the space by the efficient recovery of heat from the engine cooling water, which is injected into the refrigerant circuit by a highly efficient plate heat exchanger. In addition, the use of engine waste heat ensures that our gas heat pump air conditioner requires no defrost cycle, therefore providing continuous 100% heating performance in severe weather conditions with an outside air temperature as low as -20°C. During cooling mode the rejected heat from the engine is available for use with in a DHW system and can supply up to 30 kW of hot water at 75°C. The DHW is also available in heating when the outside air temp is above 7°C.

Water chiller option
Our GHP system is also available with a water chiller option, which can be combined with individual outdoor units or as part of a DX chilled water mix of indoor units. The system can be operated via a BMS system or a Panasonic supplied control panel, with chilled water set points from -15°C – +15°C and heating set points 35°C – +55°C.

No defrost requirements
Below 4°C ambient in heating mode, the outdoor fans switch OFF, saving further running costs and CO_2 emissions.

ECO G with Water Heat Exchanger for chilled and hot water production

For hydronic applications.



ECO G Outdoor Units Range

	16 HP	20 HP	25 HP	30 HP	32 HP	36 HP	40 HP	45 HP	50 HP
Capacity (Cooling / Heating)	45,00 / 50,00 kW	56,00 / 63,00 kW	71,00 / 80,00 kW	85,00 / 95,00 kW	90,00 / 100,00 kW	101,00 / 113,00 kW	112,00 / 126,00 kW	127,00 / 143,00 kW	142,00 / 160,00 kW
									
ECO G High Power	U-16GEP2E5	U-20GEP2E5	U-25GEP2E5						
ECO G and ECO G Multi	U-16GE2E5	U-20GE2E5	U-25GE2E5	U-30GE2E5	U-16GE2E5 U-16GE2E5	U-16GE2E5 U-20GE2E5	U-20GE2E5 U-20GE2E5	U-20GE2E5 U-25GE2E5	U-25GE2E5 U-25GE2E5
ECO G 3 Way	U-16GF2E5	U-20GF2E5	U-25GF2E5						

Comparison of heating capacity

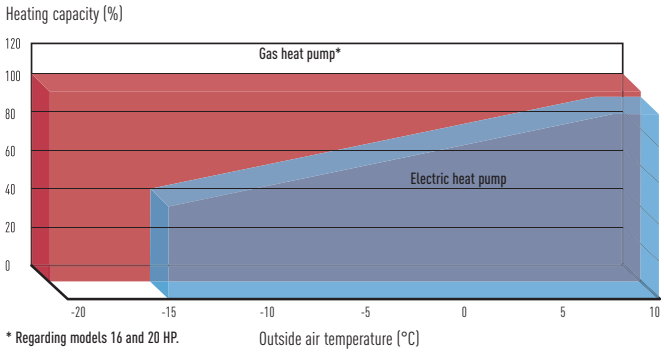

* Regarding models 16 and 20 HP.

Comparison of the start times for heating operation

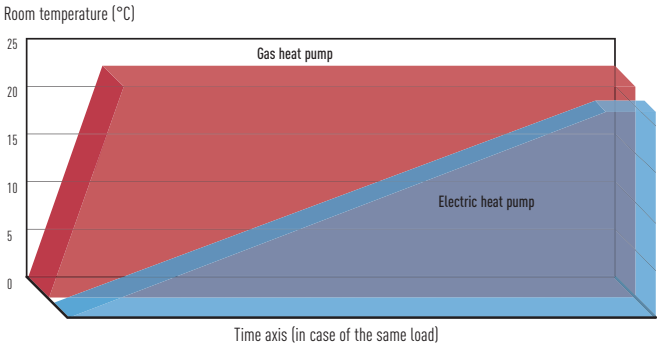

The Gas Heat Pump (GHP)

Panasonic Gas Heat Pump is the natural choice for commercial projects, especially for those projects where power restrictions apply. As you would expect, all of our Gas Driven VRF systems are designed to give the highest reliability rates. The GHP engine or (internal combustion engine) varies the engine speed to match the building load functions that are comparable with an inverter type electric air conditioner.

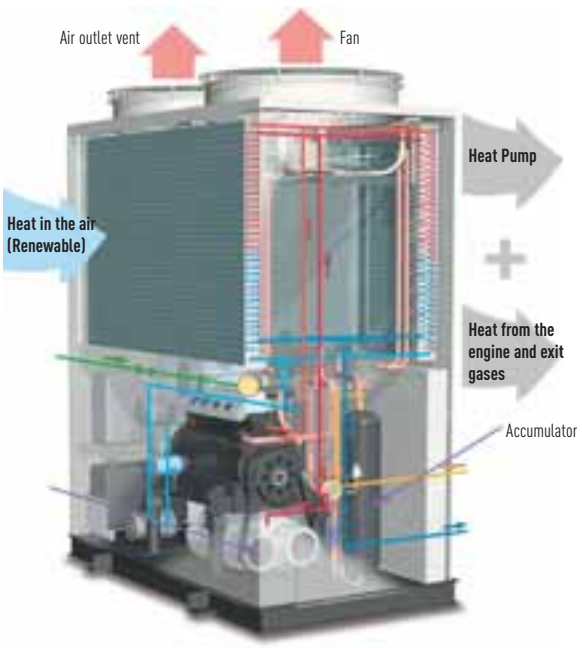

Power supply problems?

If you are short of electrical power, our gas heat pump could be the perfect solution:

- Runs on natural gas or LPG and just needs Single Phase supply
- Enables the building's electrical power supply to be used for other critical electrical demands
- Reduces capital cost to upgrade power substations to run heating and cooling systems
- Reduces power loadings within a building especially during peak periods
- Electricity supply freed up for other uses such as IT servers, commercial refrigeration, manufacturing, lighting etc.

GHP Outdoor Heat Exchanger

- Integrated DX and hot water coil
- No defrost required
- Faster reaction to demand for heating

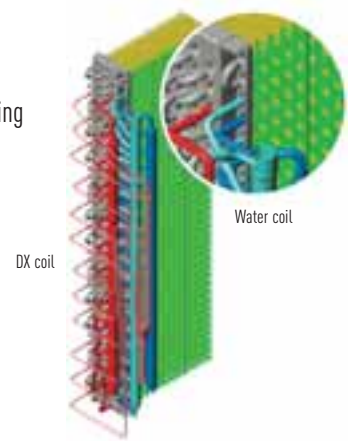



ECO G High Power

2-Pipe Heat Pump System with Electrical Power Generator

Production of electricity

Generates up to 2 kW depending on air conditioning load.

Panasonic innovates again introducing a new GHP producing his own electricity.

Equipped with a small, high-performance generator.
Compressor and generator are driven by gas engine. The generated electricity is used for the fan motor and cooling water pump of its own unit. The generating efficiency is more than 40%.

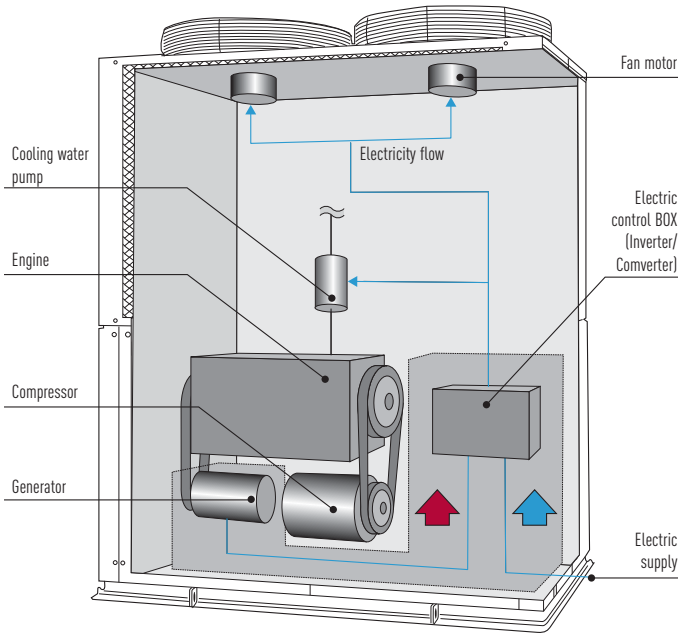

ECO G High Power

GHP with electrical generator. Only consumes 1% of the electricity required by standard VRF systems!

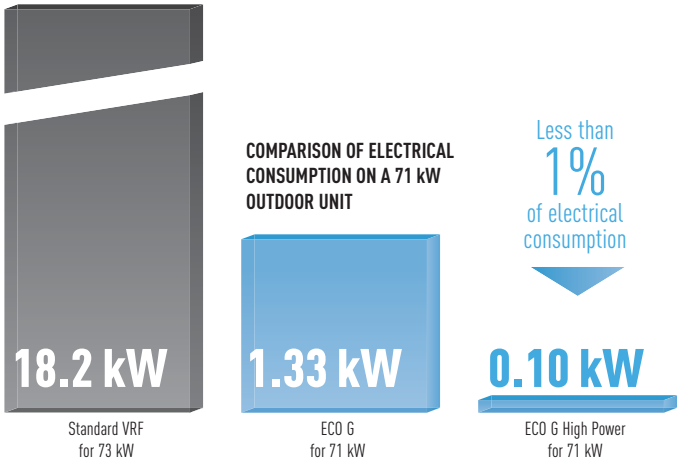

ECO G High Power, ECO G and ECO G Multi

2-Pipe Heat Pump System

Easy to add additional units in the future

Load can easily be increased in the future by the addition of indoor and outdoor units without having to plumb pipe shafts.

* When specifying refrigerant pipe work, please choose the size according to the horsepower after the increase of units.

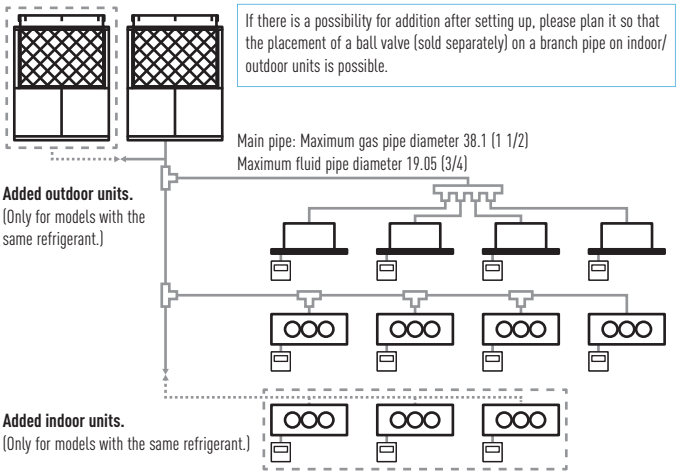

Maximum possible number of outdoor units to be combined	2 units
Maximum horsepower of combined outdoor units	50 HP
Maximum possible number of indoor units to be connected	48 units[1]
Indoor/outdoor units capacity ratio	50%~130%[2]

1) When 2 outdoor units are connected. 2) Capacity of indoor units connection is: Minimum; 50% of the capacity of the smallest outdoor unit within the system, Maximum; 130%: total capacity of the system outdoor units.
Indoor units are same as multi series for buildings.

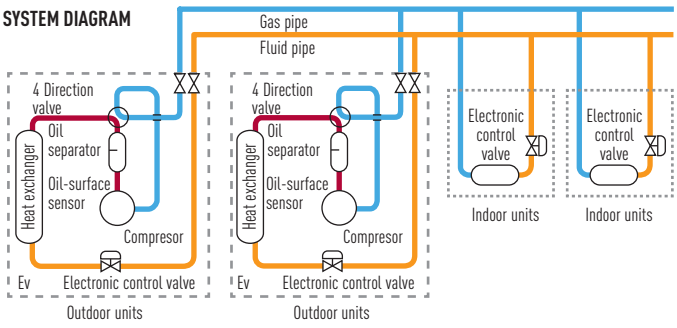

Saving Energy

- Energy savings achieved by the appropriate capacity.
- Equational program function.

Energy savings are achieved by the appropriate load divider function, which enables efficient operation by concentrating the cooling/heating capacity to one outdoor unit and stopping the other. Compared to conventional machines with a similar COP, this function allows energy savings and thus reduces the running costs, especially in part-load seasons like spring and autumn.

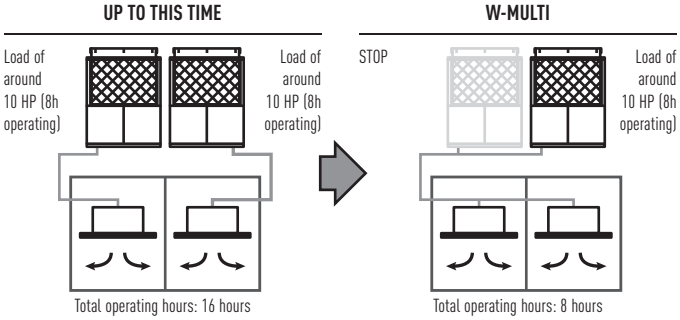

Non-stop operation, even during maintenance

- System will not stop even during maintenance, due to Manual Backup Operating Function.
- Maintenance is possible during weekdays because it can continue operating during maintenance.
- Automatic Backup Operating Function enables continuous operation.

If one outdoor unit stops the backup function will automatically start on the remaining unit and continue operating. During service intervals, the system being serviced can be isolated by a closing valve in the outdoor unit, enabling continuous operation with the still operative outdoor unit.

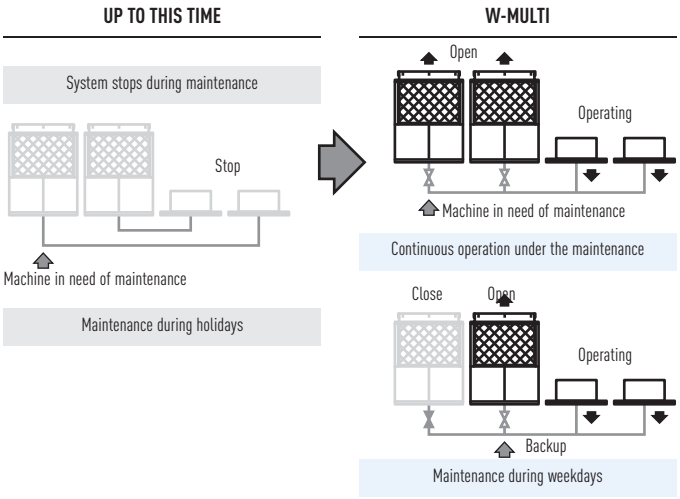

Long lifetime

- Renewal period prolonged due to rotation function.

Rotation function, which is run from outdoor units with low operating time, will average the operating hours of each outdoor unit. This extends the periods between maintenance or replacement.

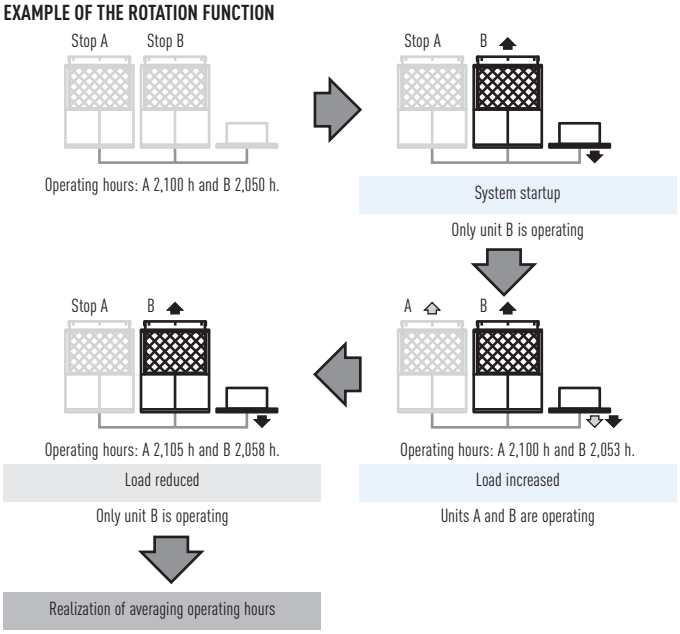

ECO G 3 Way

Ease of construction

- By using common header pipe work the installation cost and time is significantly reduced.

By combining all pipes, which were needed for each indoor unit, into a common pipe in each system, the number of pipes are reduced by half* which leads to ease of construction. Furthermore, space of pipes within pipe shafts can be reduced by 2/3.*

Combining all pipes, which were needed for each outdoor unit, into a pipe in each system. (Number of pipes is reduced by half).

*System with approximately 40HP (20HP x 2 units)

EXAMPLE OF A SYSTEM WITH APPROXIMATELY 40 HP

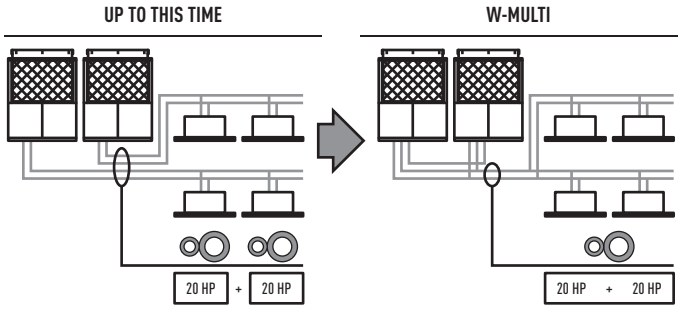

Hot Water Supply Function

- System Advantage.

The engine waste heat, which is normally exhausted into the atmosphere, is recovered via the heat exchanger and effectively used to heat water, so the GHP Chiller acts as embedded sub system that alleviates the load on the client's main hot water system, and therefore offers 'free' hot water.

Capacity at cooling standard point		Outlet temperature 75°C	
Outdoor unit	U-16GE2E5	kW	15,00
	U-20GE2E5		20,00
	U-25GE2E5		30,00
	U-30GE2E5		30,00
Hot water piping allowable pressure		MPa	0,7
Hot water circulation rate		m³/h	3,9
Hot water tube size			Rp 3/4

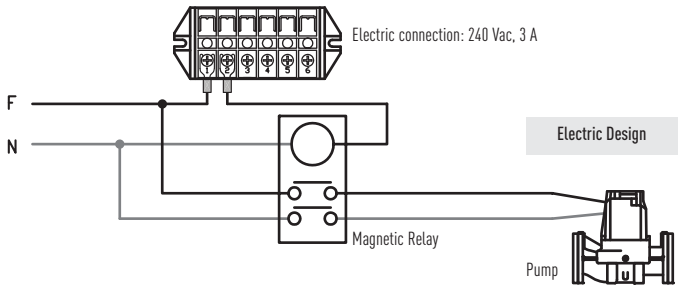

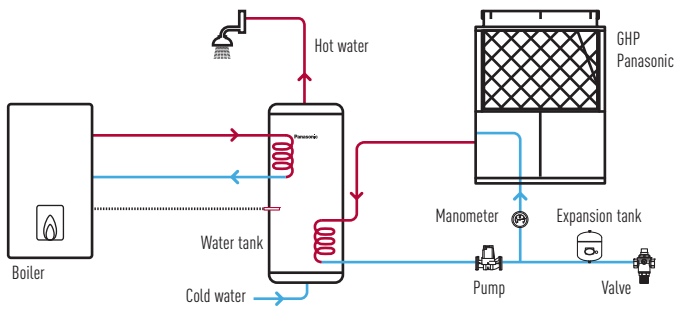

- All the items illustrated in this drawing (except the outdoor unit) are not supplied by Panasonic.
- During start up, set temperature value of the water in the outdoor unit's parameter.

Excellent performance

Panasonic 3 WAY Multi system is capable of simultaneous heating/cooling and individual operation of each indoor unit by only one outdoor unit. As a result, efficient individual air conditioning is possible in buildings having diverse room temperatures.

System example

Improved maintenance intervals. The unit only needs to be serviced every 10,000 hours. This is the best in the industry.

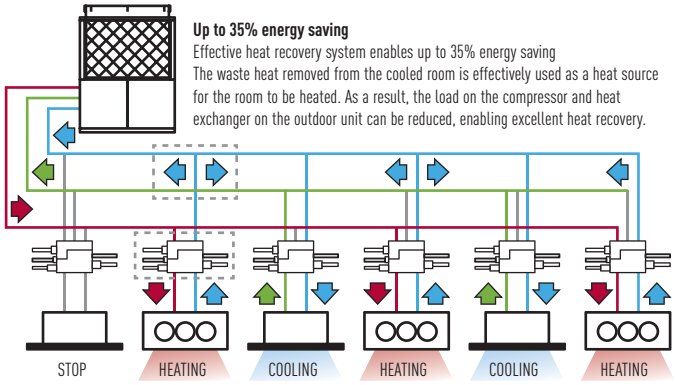

Solenoid valve kit

To be fitted on all 'zones' to allow simultaneous heating and cooling. Up to 36 indoor units are capable of simultaneous heating/cooling operation. Oil-recovery operation to gives more stable comfort air-conditioning control.

3-PIPE CONTROL SOLENOID VALVE KIT

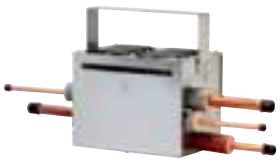

CZ-P56HR3
Up to 5.6 kW
CZ-P160HR3
From 5.7 to 16 kW

KIT-P56HR3
(CZ-P56HR3+CZ-CAPE2)
KIT-P160HR3
(CZ-P160HR3+CZ-CAPE2)

3-PIPE CONTROL PCB



3-Pipe control PCB CZ-CAPE2*.
Must be added to the CZ-P56HR3 OR CZ-P160HR3.
* For wall mounted.

VALVE DIMENSIONS

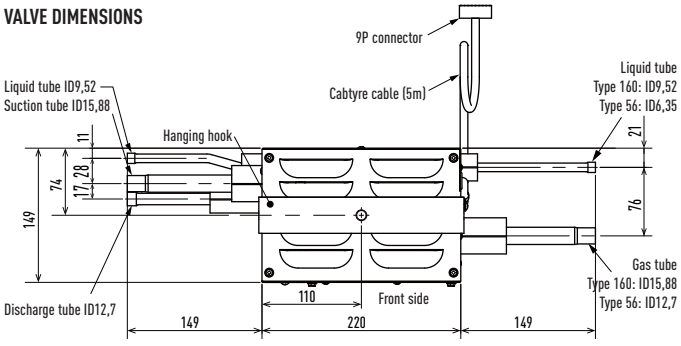

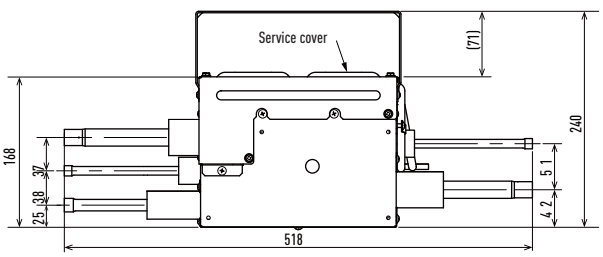



ECO G Water Heat Exchanger for hydronic applications

Connection to chilled water coils in air handling equipment.

Air Handling application

When a top London restaurant opened, it needed large volumes of fresh air to ensure the optimum dining environment. GHP units connected to the cooling coils within the air handling equipment ensured the air was introduced in the right condition in both summer and winter.





Chiller replacement. Chilled water supply to fan coils.

Chiller replacement

When some old chillers needed replacing at the end of their operational lifetime, GHPs with Water Heat Exchangers enabled the project to be carried out in stages whilst still utilising the existing water pipe work and fan coils. This enabled the project to be delivered on time, to a restricted budget and avoided all issues regarding refrigerant in confined spaces.



Connection to 'close control' computer equipment.

Computer room applications

When all available electrical power needed to be utilised for the IT equipment for a leading international bank, the cooling load of over 450 kW had to be powered by gas. The outdoor units were connected via Water Heat Exchangers to cooling coils inside the 'close control' units thereby maintaining a conditioned environment for temperature and humidity. By utilising the hot water function over 100 kW of hot water are supplied to the building and therefore the additional benefit of considerable CO_2 savings is ensured.

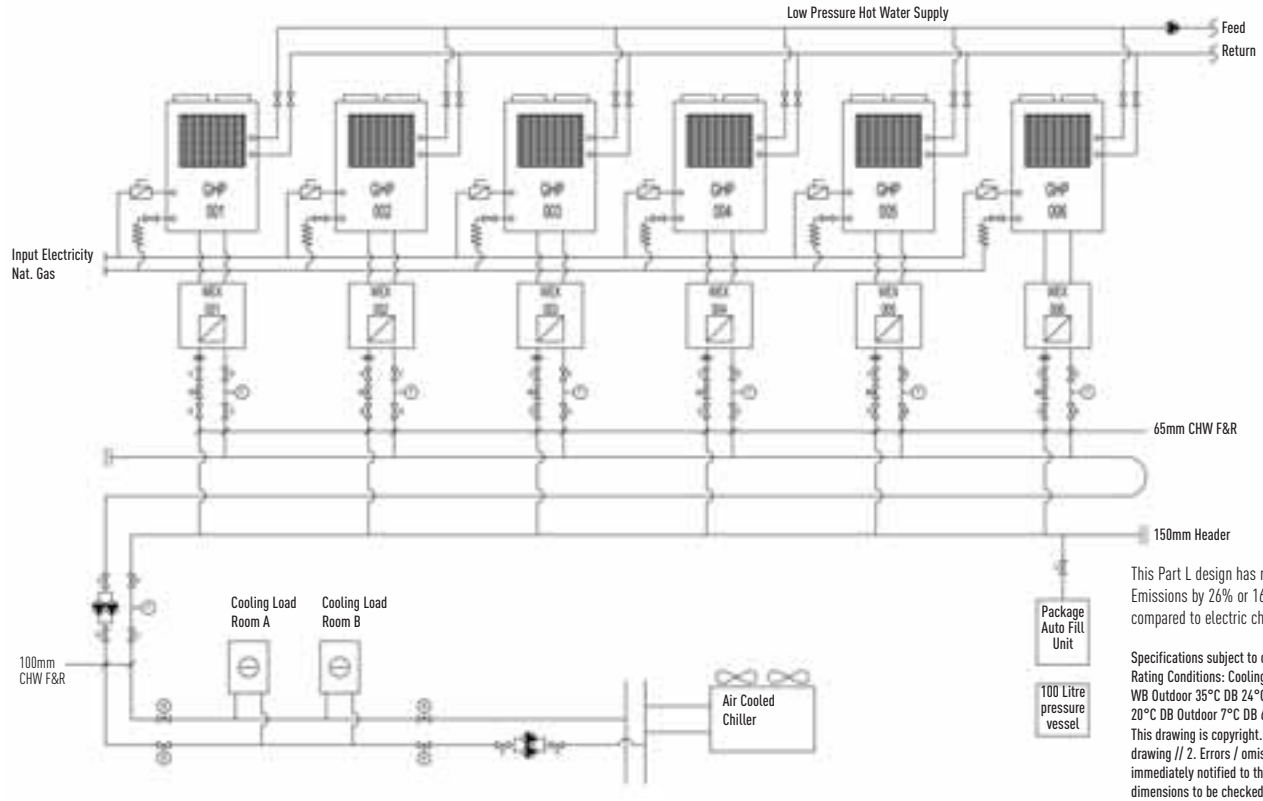

This Part L design has reduced CO_2 Emissions by 26% or 166 tonnes per annum compared to electric chillers.

Specifications subject to change without notice. Rating Conditions: Cooling Indoor 27°C DB 19°C WB Outdoor 35°C DB 24°C WB Heating Indoor 20°C DB Outdoor 7°C DB 6°C WB.
This drawing is copyright. // 1. Do not scale this drawing // 2. Errors / omissions to be immediately notified to the Engineer. // 3. All dimensions to be checked on site.

ECO G HIGH POWER

The 2-Pipe Gas Driven VRF with an electrical power generator

ECO G High Power is a revolution in air conditioning design. Fitted with a permanent magnet, non-bearing type generator, it is the first VRF system that can supply heating, cooling, hot water and now also supply electrical power. Each ECO G High Power unit has a 2.0 kW generator, drastically reducing the outdoor unit's electricity consumption.



HP			16 HP	20 HP	25 HP
Model			**U-16GEP2E5**	**U-20GEP2E5**	**U-25GEP2E5**
Cooling capacity		kW	45,00	56,00	71,00
Hot water (cooling mode)		kW	15,0	20,0	30,0
Power Input		kW	0,1 (220~230) 0,36 (240)	0,1 (220~230) 0,36 (240)	0,1 (220~230) 0,36 (240)
EER	Nominal	W/W			
Max COP (inc hot water)					
Gas consumption		kW	31,3	41,4	63,5
Heating capacity	STD / Low temp[1]	kW	50,0 / 53,0	63,0 / 67,0	80,0 / 78,0
Power Input		kW	0,1 (220~230) 0,36 (240)	0,1 (220~230) 0,36 (240)	0,1 (220~230) 0,36 (240)
COP	Nominal	W/W			
Gas consumption	STD	kW	33,8	43,9	55,1
	Low temperature[1]	kW			
COP	Average				
Starter amperes		A	30	30	30
Sound pressure level		dB(A)	57	58	62
Dimensions	H x W x D	mm	2.273 x 1.650 x 1.000 (+80)	2.273 x 1.650 x 1.000 (+80)	2.273 x 1.650 x 1.000 (+80)
Net weight		kg	770	795	825
Pipe Connections	Gas	Inch (mm)	1 1/8 (28,58)	1 1/8 (28,58)	1 1/8 (28,58)
	Liquid	Inch (mm)	1/2 (12,70)	5/8 (15,88)	5/8 (15,88)
	Fuel gas		R3/4 (bolt thread)	R3/4 (bolt thread)	R3/4 (bolt thread)
	Exhaust drain port	mm	25	25	25
Indoor/outdoor capacity ratio			50-200%[2]	50-200%[2]	50-200%[2]
Number of connections indoor[2]			24	24	24

Service kits model	Kit CZ-PSK560S
Outdoor unit reference	U-16GEP2E5 / U-20GEP2E5 / U-25GEP2E5
Material included	
Oil Filter	1
Air Cleaner Element	1
Plug	4
V BELT (for compressor)	1
V Belt (for generator)	1
Oil Strainer	1
Drain Filter Packing	1

Rating Conditions: Cooling Indoor 27°C DB / 19°C WB. Cooling Outdoor 35°C DB. Heating (standard) Indoor 20°C DB. Heating (standard) Outdoor 7°C DB / 6°C WB. Heating (low temp.) Indoor 20°C DB / 15°C WB or less. Heating (low temp.) Outdoor 2°C DB / 1°C WB.
DB: Dry Bulb; WB: Wet Bulb

1) Low temp condition: outdoor temperture 2°C.
2) Indoor unit can be connected to up to 16 kW model (model size 160)
Specifications subject to change without notice.

Cooling and heating capacities in the tables are determined under the test conditions of JIS B 8627.
Effective heating requires that the outdoor air intake temperature be at least –20°C DB or –21°C WB.

• Gas consumption is the total (high) calorific value standard. • Outdoor unit operating sound is measured 1 meter from the front and 1.5 meters above the floor (in an anechoic environment). Actual installations may have larger values due to ambient noise and reflections. • Specifications are subject to change without notice. • Hot water heating capacity is applicable during cooling operation. • The maximum water temperature that can be obtained is 75°C. Water heating performance and temperature vary with the air conditioning load. Because the hot water heating system uses waste heat from the engine, which runs the air conditioning, its ability to heat water is not guaranteed.



U-16GEP2E5 // U-20GEP2E5 // U-25GEP2E5

Technical focus

- 2-Pipe air conditioning system providing cooling or heating
- Up to 2 kW electricity generated (used on the outdoor unit)
- Very efficient generator
- Can connect to up to 24 indoor units
- IU/OU capacity ratio 50–200%
- 15 to 30 kW hot water generation capacity
- Free Hot water provided when in cooling throughout temperature range and in heating when the ambient is above 7°C*
- 200 m maximum allowable piping length (L1)

* Referring to outside temperature.

Generates electricity during heating or cooling operation

Generates electricity and air conditioning (heating or cooling) at the same time by using remaining engine power. ECO G High Power can generate 2.0 kW electricity at a generation efficiency of more than 40%.

SERVICE CLEARANCES FOR INSTALLATION

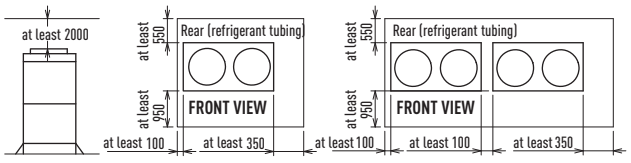

	kW	45.0	56.0-71.0
1	Suction refrigerant pipe	Ø 28.58	
2	Liquid refrigerant pipe	Ø 12.7	Ø 15.88
3	Exhaust gas drain port	HOSE OD Ø 25 (accessory)	
4	Electrical power supply port	Ø 28	
5	Inter-unit cable port	Ø 28	
6	Fuel gas port	R3/4	
7	Condensation drain opening	Ø 20	
8	Rain and condensation outlet		
9	Engine exhaust outlet		
10	Suspension holes 4-Ø 20x30		
11	Anchor holes 4-Ø 22x30		
12	Segmented display		
13	Coolant intake (top)		
14	Vent		
15	Hot water inlet	Rp 3/4	
16	Hot water outlet	Rp 3/4	

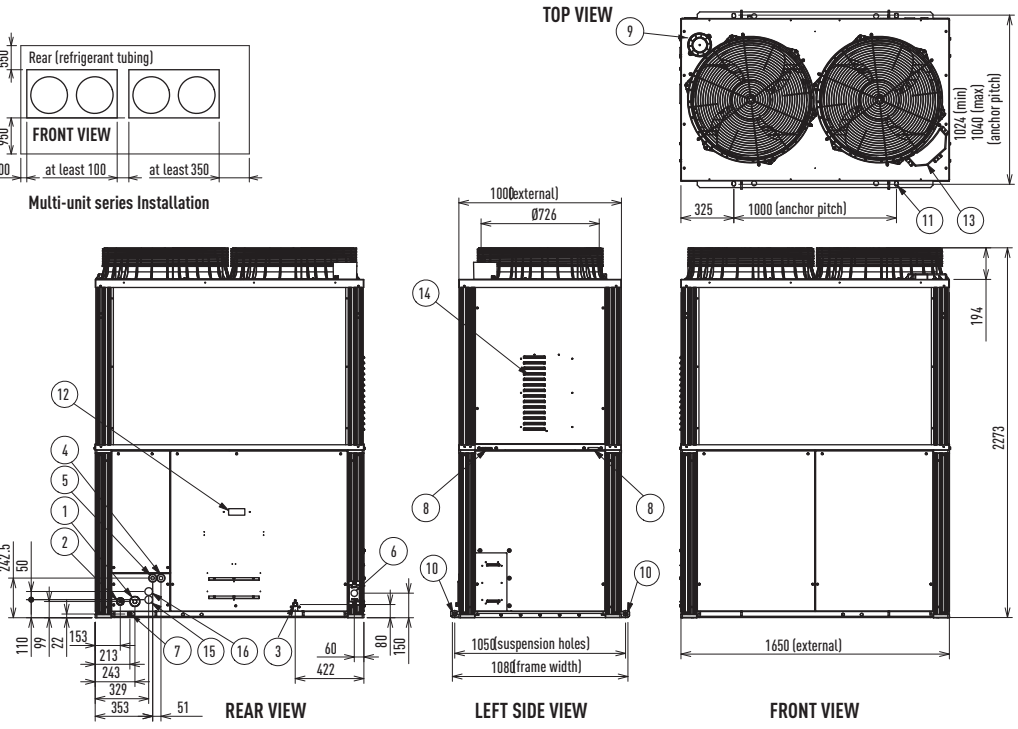

ECO G AND ECO G MULTI

2-Pipe Heat Pump System

ECO G and ECO G Multi 2-Pipe for Heat Pump Applications.

The S Series 2-Pipe not only offers improved performance but also increased flexibility. Now available as multi-systems, many combinations are possible, from 16 HP to 50 HP, allowing for more power and enabling accurate matching of a system building load. Additional new features include part load engine management and compressor run hour equalisation.



HP			16 HP	20 HP	25 HP	30 HP	32 HP	36 HP*	40 HP*	45 HP*	50 HP
Model			U-16GE2E5	U-20GE2E5	U-25GE2E5	U-30GE2E5	U-16GE2E5 U-16GE2E5	U-16GE2E5 U-20GE2E5	U-20GE2E5 U-20GE2E5	U-20GE2E5 U-25GE2E5	U-25GE2E5 U-25GE2E5
Cooling capacity		kW	45,00	56,00	71,00	85,00	90,00	101,00	112,00	127,00	142,00
Hot water (cooling mode)		kW	15,00	20,00	30,00	30,00	30,00	35,00	40,00	50,00	60,00
Power Input		kW	0,71	1,02	1,33	1,70	1,42	1,73	2,04	2,35	2,66
EER (Calorific Value)[1]	High / Low	W/W	1,48 / 1,64	1,40 / 1,55	1,15 / 1,28	1,22 / 1,35	1,48 / 1,64	1,43 / 1,59	1,40 / 1,55	1,25 / 1,39	1,15 / 1,28
Max COP (inc hot water)			1,97	1,89	1,64	1,65	1,97	1,93	1,89	1,74	1,64
Gas consumption		kW	29,70	39,10	60,40	67,9	59,40	68,80	78,20	99,50	120,80
Heating capacity	STD / Low temperature[2]	kW	50,00 / 53,00	63,00 / 67,00	80,00 / 78,00	95,00 / 90,00	100,00 / 106,00	113,00 / 120,00	126,00 / 134,00	143,00 / 145,00	160,00 / 156,00
Power Input		kW	0,60	0,64	0,83	1,45	1,20	1,24	1,28	1,47	1,66
COP (Calorific Value)[1]	High / Low	W/W	1,51 / 1,68	1,46 / 1,62	1,48 / 1,64	1,37 / 1,52	1,51 / 1,68	1,48 / 1,64	1,46 / 1,62	1,47 / 1,63	1,48 / 1,64
Gas consumption	STD	kW	32,50	42,50	53,20	68,10	65,00	75,00	85,00	95,70	106,40
	Low temperature[2]	kW	41,50	56,40	62,30	78,00	83,00	97,90	112,80	118,70	124,60
COP	Average		1,50	1,43	1,32	1,29	1,50	1,46	1,43	1,36	1,32
Starter amperes		A	30	30	30	30	30	30	30	30	30
Sound pressure level		dB(A)	57	58	62	63	60	61	61	63	65
Dimensions	Height	mm	2.273	2.273	2.273	2.273	2.273	2.273	2.273	2.273	2.273
	Width	mm	1.650	1.650	1.650	2.026	1.650+100+1.650	1.650+100+1.650	1.650+100+1.650	1.650+100+1.650	1.650+100+1.650
	Depth	mm	1.000 (+80)	1.000 (+80)	1.000 (+80)	1.000 (+80)	1.000 (+80)	1.000 (+80)	1.000 (+80)	1.000 (+80)	1.000 (+80)
Net weight		kg	755	780	810	840	755 + 775	755 + 780	780 + 780	780 + 810	810 + 810
Pipe Connections	Gas	Inch (mm)	1 1/8 (28,58)	1 1/8 (28,58)	1 1/8 (28,58)	1 1/4 (31,75)	1 1/4 (31,75)	1 1/4 (31,75)	1 1/2 (38,10)	1 1/2 (38,10)	1 1/2 (38,10)
	Liquid	Inch (mm)	1/2 (12,70)	5/8 (15,88)	5/8 (15,88)	3/4 (19,05)	3/4 (19,05)	3/4 (19,05)	3/4 (19,05)	3/4 (19,05)	3/4 (19,05)
	Fuel gas		R3/4 (bolt thread)	R3/4 (bolt thread)	R3/4 (bolt thread)	R3/4 (bolt thread)	R3/4 (bolt thread)	R3/4 (bolt thread)	R3/4 (bolt thread)	R3/4 (bolt thread)	R3/4 (bolt thread)
	Exhaust drain port	mm	25 rubber hose	25 rubber hose	25 rubber hose	25 rubber hose	25 rubber hose	25 rubber hose	25 rubber hose	25 rubber hose	25 rubber hose
Indoor/outdoor capacity ratio			50-200 %	50-200 %	50-200 %	50-170 %	50-130 %	50-130 %	50-130 %	50-130 %	50-130 %
Number of connections indoor			24	24	24	32	48	48	48	48	48

GHP Service kits model names	Kit CZ-PSK560S	Kit CZ-PSK850S
Outdoor unit reference	U-16GE2E5 / U-20GE2E5 / U-25GE2E5	U-30GE2E5
Material included on the kit		
Oil Filter	1	1
Air Cleaner Element (Air Filter)	1	1
Plug	4	4
V BELT (for compressor)	1	1
V Belt (for generator)	-	-
Oil Strainer	1	1
Drain Filter Packing	1	1

Rating Conditions: Cooling Indoor 27°C DB / 19°C WB. Cooling Outdoor 35°C DB. Heating (standard) Indoor 20°C DB. Heating (standard) Outdoor 7°C DB / 6°C WB. Heating (low temp.) Indoor 20°C DB / 15°C WB or less. Heating (low temp.) Outdoor 2°C DB / 1°C WB.
DB: Dry Bulb; WB: Wet Bulb

* In these combinations, GEP2E5 is able to connect to a W-multi system Specifications subject to change without notice instead of a GE2E5..
1) Referred to Natural Gas (HCV=55,489 MJ/kg; LCV=50,013 MJ/kg). 2) Low temperature condition: outdoor temperature 2°C.
Specifications subject to change without notice.

Cooling and heating capacities in the tables are determined under the test conditions of JIS B 8627.
Effective heating requires that the outdoor air intake temperature be at least –20°C DB or –21°C WB.

• Gas consumption is the total (high) calorific value standard. • Outdoor unit operating sound is measured 1 meter from the front and 1.5 meters above the floor (in an anechoic environment). Actual installations may have larger values due to ambient noise and reflections. • Specifications are subject to change without notice. • Hot water heating capacity is applicable during cooling operation. • The maximum water temperature that can be obtained is 75°C. Water heating performance and temperature vary with the air conditioning load. Because the hot water heating system uses waste heat from the engine, which runs the air conditioning, its ability to heat water is not guaranteed.



U-16GE2E5 // U-20GE2E5 // U-25GE2E5 // U-30GE2E5

Technical focus

- Reduced gas consumption by Miller-cycle engine
- Reduced electrical power consumption by using DC Motors
- Lightweight design reduces weight
- Capacity ratio 50-130% (single models only)
- Quiet mode offers a further 2 dB(A) reduction
- Part load efficiencies increased
- Connectivity increased - now up to 48 indoor units
- Multi-systems with combinations from 13 HP up to 50 HP
- 10,000 run hours between engine service intervals (equivalent to one maintenance every 3.2 years*)
- 200 m maximum allowable piping length (L1)
- Extended pipe runs (total 780 m)
- Full heating capacity down to -20°C
- No defrost cycle

* Assuming 3,120 running hours per year - 12 h x 5 days x 52 weeks

Sample installation



	kW	45	56 - 71	85
1	Gas refrigerant pipe	Ø 28.58		Ø 31.75
2	Liquid refrigerant pipe	Ø 12.7	Ø 15.88	Ø 19.05
3	Exhaust gas drain port	HOSE OD Ø 25 (accessory)		
4	Electrical power supply port	Ø 28		
5	Inter-unit cable port	Ø 28		
6	Fuel gas port	R3/4		
7	Condensation drain opening	Ø 20		
8	Rain and condensation outlet			
9	Engine exhaust outlet			
10	Suspension holes 4-Ø 20x30			
11	Anchor holes 4-Ø 22x30			
12	Segmented display			
13	Coolant intake (top)			
14	Vent			
15	Hot water intake	Rp3/4		
16	Hot water outlet	Rp3/4		

SERVICE CLEARANCES FOR INSTALLATION

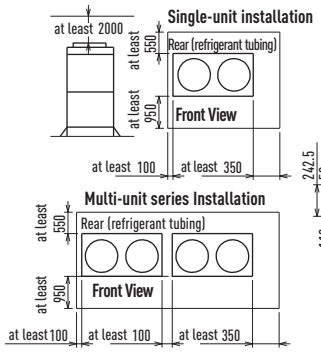

U-16GE2E5 // U-20GE2E5 // U-25GE2E5

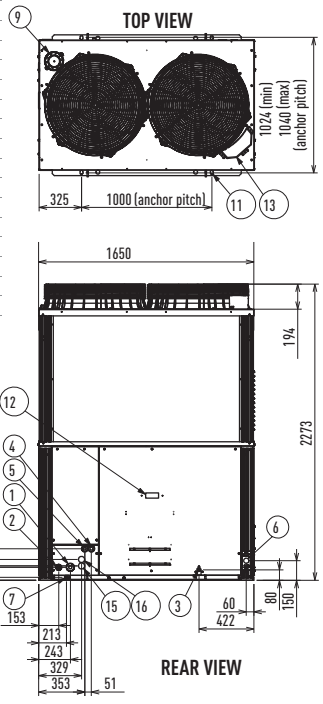

U-30GE2E5

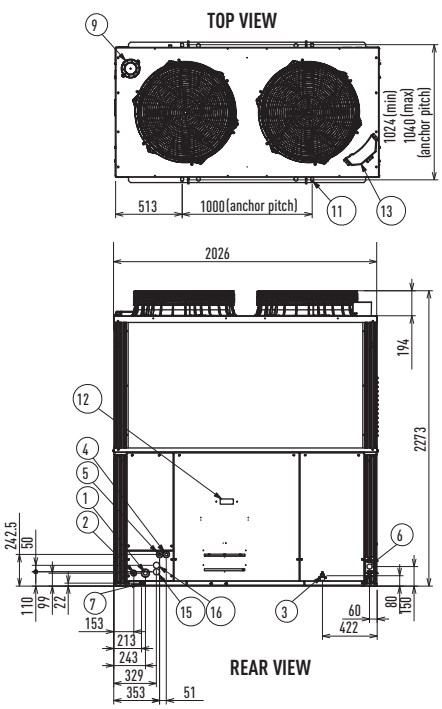

ECO G 3 WAY

3 Way Heat Recovery System with Simultaneous Heating & Cooling

The only 3 Way GHP system in Europe, the S Series ECO G 3 Way offers even more performance and outstanding features when you need simultaneous heating and cooling. Now with capacities available from 16 HP to 25 HP, Panasonic offers the greatest choice and flexibility to solve any power problem or site requirement.



HP			16 HP	20 HP	25 HP
Model			**U-16GF2E5**	**U-20GF2E5**	**U-25GF2E5**
Cooling capacity		kW	45,00	56,00	71,00
Power input cooling		kW	0,71	1,02	1,33
EER (Calorific Value)[1]	High / Low	W/W	1,48 / 1,64	1,40 / 1,55	1,15 / 1,28
Cooling gas consumption		kW	29,7	39,1	60,4
Heating capacity	STD	kW	50,00	63,00	80,00
	Low temperature[2]	kW	53,00	67,00	78,00
Power input heating		kW	0,60	0,64	0,83
COP (Calorific Value)[1]	High / Low	W/W	1,51 / 1,68	1,46 / 1,62	1,48 / 1,64
Gas consumption	STD	kW	32,5	42,5	53,2
	Low temperature[2]	kW	41,5	56,4	62,3
COP	Average		1,50	1,43	1,32
Starter amperes		A	30	30	30
Operation sound		dB(A)	57	58	62
Dimensions	H x W x D	mm	2,273 x 1,650 x 1,000 (+80)	2,273 x 1,650 x 1,000 (+80)	2,273 x 1,650 x 1,000 (+80)
Net weight		kg	775	775	805
Pipe Connections	Gas	Inch (mm)	1 1/8 (28,58)	1 1/8 (28,58)	1 1/8 (28,58)
	Liquid	Inch (mm)	3/4 (19,05)	3/4 (19,05)	3/4 (19,05)
	Discharge	Inch (mm)	7/8 (22,22)	1 (25,40)	1 (25,40)
	Fuel gas		R3/4	R3/4	R3/4
	Exhaust drain port	mm	25	25	25
Indoor/outdoor capacity ratio			50-200%[3]	50-200%[3]	50-200%[3]
Number of connected indoor units			24	24	24

Solenoid valve kit		
KIT-P56HR3	KIT-P56HR3	3-Pipe control Solenoid valve kit (up to 5,6kW)
	CZ-P56HR3	Solenoid valve kit (up to 5,6kW)
	CZ-CAPE2	3-Pipe control PCB
KIT-P160HR3	KIT-P160HR3	3-Pipe control Solenoid valve kit (from 5,6kW to 10,6kW)
	CZ-P160HR3	Solenoid valve kit (from 5,6kW to 10,6kW)
	CZ-CAPE2	3-Pipe control PCB
CZ-CAPEK2		3-Pipe control PCB for wall mounted

GHP Service kits model name	Kit CZ-PSK560S
Outdoor unit reference	U-16GF2E5 / U-20GF2E5 / U-25GF2E5
Material included on the kit	
Oil Filter	1
Air Cleaner Element (Air Filter)	1
Plug	4
V BELT (for compressor)	1
V Belt (for generator)	-
Oil Strainer	1
Drain Filter Packing	1

Rating Conditions: Cooling Indoor 27°C DB / 19°C WB. Cooling Outdoor 35°C DB. Heating (standard) Indoor 20°C DB. Heating (standard) Outdoor 7°C DB / 6°C WB. Heating (low temp.) Indoor 20°C DB / 15°C WB or less. Heating (low temp.) Outdoor 2°C DB / 1°C WB.
DB: Dry Bulb; WB: Wet Bulb

1) Referred to Natural Gas (HCV=55,489 MJ/kg; LCV=50,013 MJ/kg). 2) Low temperature condition: outdoor temperature 2°C. 3) Indoor unit can be connected to up to 16 kW model (model size 60)
Specifications subject to change without notice.

Cooling and heating capacities in the tables are determined under the test conditions of JIS B 8627.
Effective heating requires that the outdoor air intake temperature be at least –20°C DB or –21°C WB.

• Gas consumption is the total (high) calorific value standard. • Outdoor unit operating sound is measured 1 meter from the front and 1.5 meters above the floor (in an anechoic environment). Actual installations may have larger values due to ambient noise and reflections. • Specifications are subject to change without notice. • Hot water heating capacity is applicable during cooling operation. • The maximum water temperature that can be obtained is 75°C. Water heating performance and temperature vary with the air conditioning load. Because the hot water heating system uses waste heat from the engine, which runs the air conditioning, its ability to heat water is not guaranteed.



U-16GF2E5 // U-20GF2E5 // U-25GF2E5

Technical focus

- Simultaneous heating and cooling for total control
- Reduced gas consumption by Miller-cycle engine
- Reduced electrical power consumption by using DC Motors
- Part load efficiencies increased
- Connectability increased to up to 24 indoor units
- 145 m maximum allowable piping length, L1
- Capacity ratio 50–200%
- Extended pipe runs (total 780 m)
- Quiet mode offers a further 2 dB(A) reduction
- Full heating capacity down to -21°C
- Option of using LPG as a power supply (increases flexibility and avoids problems of potential site restrictions in the future. The purer fuel is also excellent for further reductions in CO_2 emissions)
- No defrost cycle
- 10,000 run hours between engine service intervals (equivalent to one maintenance every 3.2 years*)

* Assuming 3,120 running hours per year - 12 h x 5 days x 52 weeks

Additional parts



3-Pipe control Solenoid valve kit
CZ-P56HR3: Up to 5.6 kW
CZ-P160HR3: From 5.7 to 16 kW
KIT-P56HR3: (CZ-P56HR3+CZ-CAPE2)
KIT-P160HR3: (CZ-P160HR3+CZ-CAPE2)
* For conference rooms and other locations where low noise is required, pay attention to the installation location and install in a corridor etc.



3-Pipe control PCB CZ-CAPE2*.
Must be added to the CZ-P56HR3 OR CZ-P160HR3.
* For wall mounted.

SERVICE CLEARANCES FOR INSTALLATION

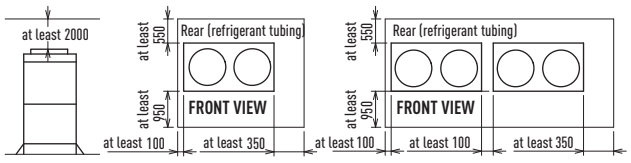

Single-unit installation | Multi-unit series Installation

	kW	45.0	56.0-71.0
1	Suction refrigerant pipe	Ø 28.58	
2	Discharge refrigerant pipe	Ø 22.22	Ø 25.4
3	Liquid refrigerant pipe	19.05	
4	Exhaust gas drain port	HOSE OD Ø 25 (accessory)	
5	Electrical power supply port	Ø 28	
6	Inter-unit cable port	Ø 28	
7	Fuel gas port	R3/4	
8	Condensation drain opening	Ø 20	
9	Rain and condensation outlet		
10	Engine exhaust outlet		
11	Suspension holes 4-Ø 20x30		
12	Anchor holes 4-Ø 22x30		
13	Segmented display		
14	Coolant intake (top)		
15	Vent		

TOP VIEW

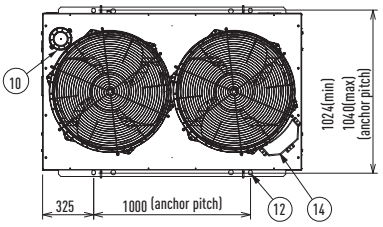

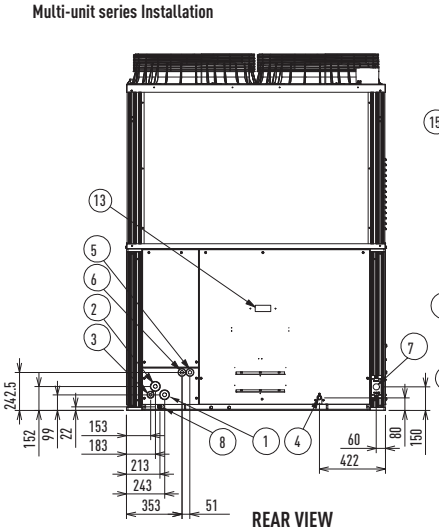

REAR VIEW

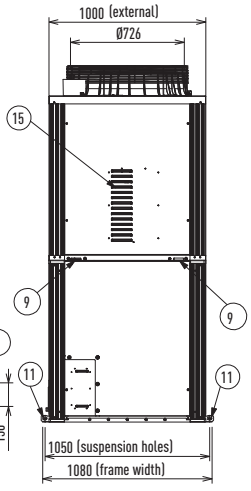

LEFT SIDE VIEW

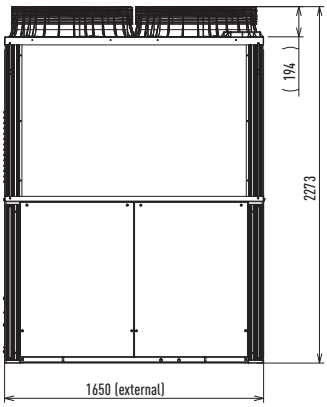

FRONT VIEW



- A CLASS PUMP INCLUDED
- 4 WAY VALVE INCLUDED
- OPTIMIZED HEAT EXCHANGER
- 1.056 x 570 x 1.010 (H x W x D)
- WATER CONNECTIONS R2"F

The Panasonic solution for chilled and hot water production!

From 28 kW to 80 kW

Key benefits:

- No cascade installation up to 80 kW with GHP outdoor unit and 51,3 kW with ECOi
- Full line-up of outdoor units which can cover up to 80 kW heat demand
- Large choice of remote controls and interfaces
- 3,25 COP with water at 45°C and outdoor temperature of +7°C

Energy saving
INVERTER+
Environmentally friendly refrigerant
R410A



With ECOi outdoor units

- Maximum hot water outlet temperature: 45°C
- Minimum chilled water outlet temperature: 5°C
- Outdoor temperature range in cooling mode: +5°C to +43°C
- Outdoor temperature range in heating mode: -11°C to +15°C

ECOi Water Heat Exchanger

Electrical VRF with Water Heat Exchanger

- With this easy to install Water Heat Exchanger unit, you can now cover projects up to 51 kW hot water demand or 44 kW on chilled application on a efficient way and cost effective.

SYSTEM EXAMPLE

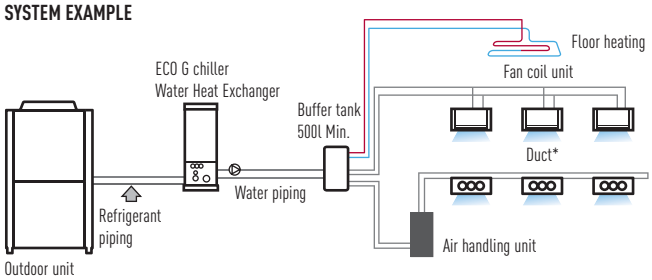

A Buffer Tank of minimum 500l is always needed.

New Electrical panel with new algorithm

- Optimized heat exchanger to increase drastically the efficiency
- Liquid receiver to outperform the functionality of the WHE
- Unique 4 way valve in order always have counterflow fluid circulation in heating and cooling fluid circulation on both sides of the cross flow. This optimizes efficiency!



On cooling mode

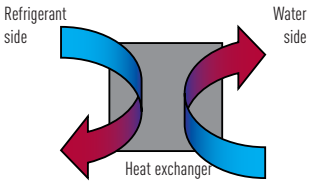

On heating mode

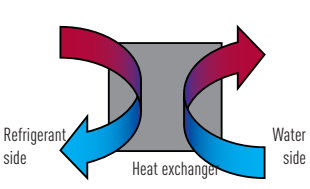

Built in A class water pump with high efficiency and capacity

WHE	Power consumption	Water flow
S-250 / S-500	9 - 130W	4,3 / 8,6
S-710	12 - 310W	12,2

ECOi 2-PIPE WITH WATER HEAT EXCHANGER

FOR CHILLED AND HOT WATER PRODUCTION

- A CLASS PUMP INCLUDED
- 4 WAY VALVE INCLUDED
- OPTIMIZED HEAT EXCHANGER
- 1056 x 570 x 1010 (H x W x D)
- WATER CONNECTIONS R2"F

For hydronic Applications

Water Heat Exchanger for GHP and ECOi, dimensions reduced by 45 %. Operation and control by timer remote control CZ-RTC2. Energy-efficient capacity control. Stainless steel plate heat exchanger with anti-freeze protection control. Change-over between heating and cooling operation.



Water Heat Exchanger*			**PAW-250WX2E5**	**PAW-500WX2E5**
Nominal cooling capacity			25,0	50,0
Nominal heating capacity			28,0	51,3
Heating capacity at +7°C, heating water temperature at 45°C		kW	28,0	51,3
COP at +7°C with heating water temperature at 45°C			3,25	3,10
Dimensions	H x W x D	mm	1.000 x 395 x 965	1.000 x 395 x 965
Net weight		kg	165	190
Water pipe connector			Rp2 Nut thread (50A)	Rp2 Nut thread (50A)
Pump (included)			Field supply	Field supply
Heating water flow (ΔT=5 K. 35°C)		l/min	4,3	8,6
Capacity of integrated electric heater		kW	Not equipped	Not equipped
Input power		kW	0,01	0,01
Maximum current		A	0,07	0,07
Outdoor unit			**U-10ME1E81**	**U-20ME1E81**
Sound pressure level		dB(A)	59	63
Sound power level		dB	73,5	77,5
Dimensions	H x W x D	mm	1.758 x 770 x 930	1.758 x 1.540 x 930
Net weight		kg	283	423
Piping connections	Liquid pipe	mm	22,22	28,58
	Gas pipe	mm	9,52	15,88
Refrigerant (R410A)		kg	6,3 *Need Additional charge at site	9,0 *Need Additional charge at site
Pipe length range	Max.	m	170	170
Pipe length for nominal capacity		m	7,5	7,5
Pipe length for additional gas		m	0 <	0 <
Additional charge (R410A)		g/m	Reffer to Manual	Reffer to Manual
Elevation difference (in/out)		m	50 (OD above) 35 (OD below)	50 (OD above) 35 (OD below)
Operation Range	Outdoor ambient	°C	-20 — +15	-20 — +15
	Water outlet (at-2/-7/-15)[2]	°C	35 — 45	35 — 45

Rating Conditions: Cooling Indoor 27°C DB / 19°C WB. Cooling Outdoor 35°C DB / 24°C WB. Heating Indoor 20°C DB. Heating Outdoor 7°C DB / 6°C WB.
DB: Dry Bulb; WB: Wet Bulb

Performance calculation in agreement with Eurovent.
Sound pressure measured at 1 m from the outdoor unit and at 1.5-m height.



PAW-250WX2E5 // PAW-500WX2E5

Technical focus

- Maximum distance between outdoor unit and Water Heat Exchanger: 170 m
- Maximum hot water outlet temperature: 45°C
- Minimum chilled water outlet temperature: 7°C
- Outdoor temperature range in cooling mode: +5°C to +43°C
- Outdoor temperature range in heating mode: -20°C to +15°C

Slim & Light design

Due to the unit's internal redesign, the width and weight are drastically reduced.

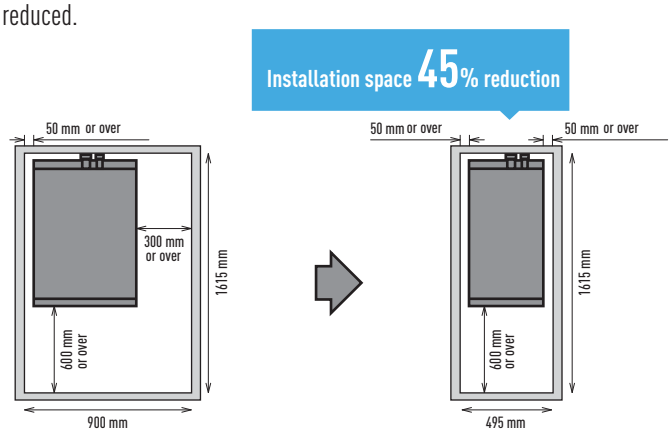

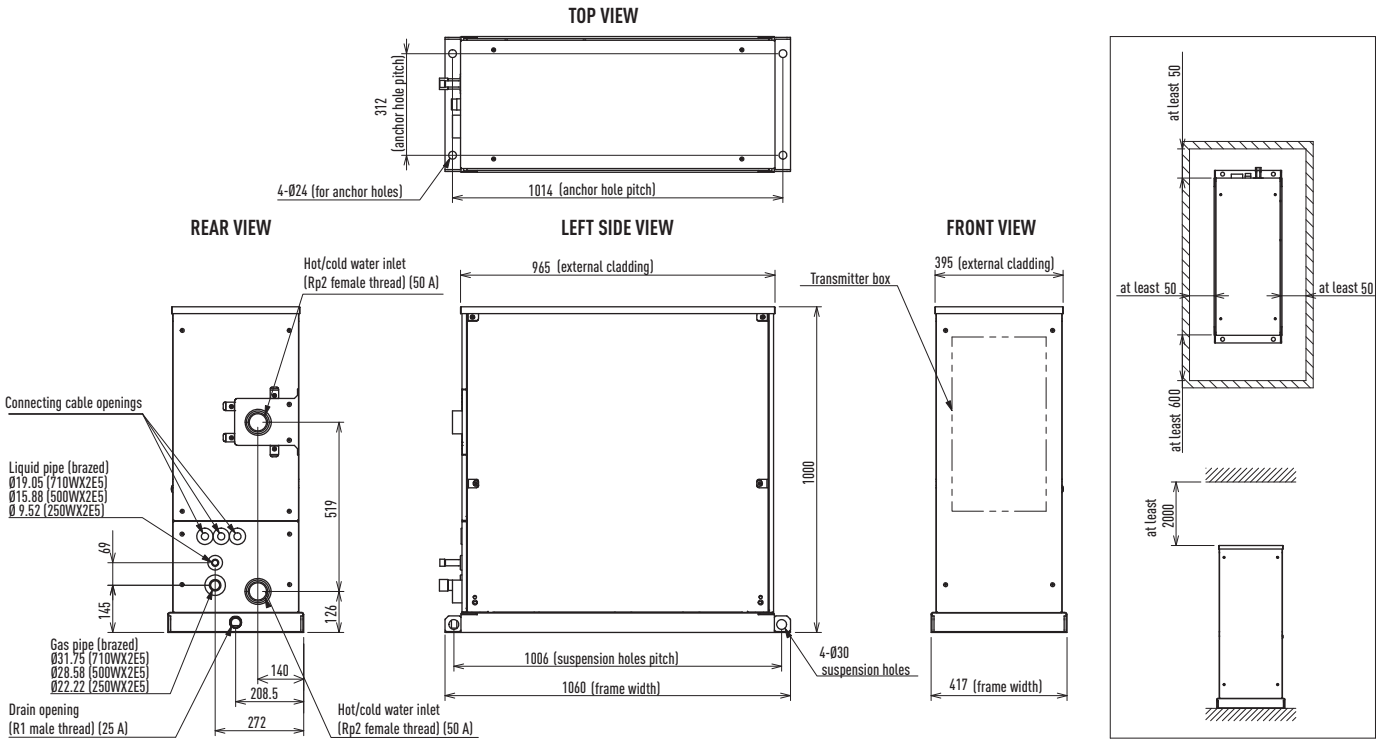



- MORE EFFICIENT THAN GAS BOILERS AND CHILLERS
- HEATING, COOLING AND DHW
- INCREASED ENERGY EFFICIENCY AND LOW CO_2 EM

GHP + WHE heating, cooling and DHW

The ECO G solution for gas boiler replacement

- Combined with a Water Heat Exchanger unit, the Panasonic GHP can create a flexible system, the ideal replacement for existing chiller and boiler systems in order to increase efficiency and reduce CO_2 emissions.
- Reused heat from the engine is an alternative to thermal solar energy
- No defrost cycle
- Super silent outdoor units
- No glycol needed as the hydromodule can be placed in heated part of building
- Keep existing water installation and fan coils
- Oversizing is reduced by keeping the power at a low temperature.
- No need for cooling towers
- Electrical demand spikes or possible costs derived from investments in new electrical infrastructures are lowered.

Excellent applicability when there is a thermal demand for heat, DHW and cooling, as well as additional thermal usages such as swimming pools, SPA, laundries: Hotels, sports centers, hospitals, gymnasiums, homes, shopping centers, etc.

High savings
ECO G
Environmentally friendly refrigerant
R410A

35% SAVINGS
BEST ECO SOLUTION



Case Study, Hotel Application

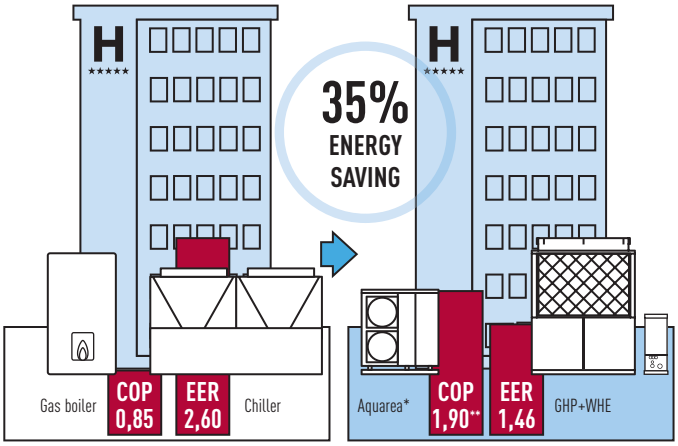

* Electric to support pick of consumption on domestic hot water. ** COP including HSW (U-20GE2E8).
EER and COP calculated in primary energy.

Example of Hotel renewal of existing Chiller and Boiler system with Panasonic GHP and Aquarea mixed solution

GHP and Aquarea are the smart solution for renewal Chiller/Boiler applications with annual running cost savings around 13.600€.

			Load kW/h year	Power Input	Running cost €
Cooling	Chiller+Boiler	Chiller	231.653	89.097	12.474
	GHP+A2W	GHP	231.653	183.852	7.354
Heating	Chiller+Boiler	Boiler	96.749	113.823	4.553
	GHP+A2W	GHP	96.749	73.630	2.945
HSW	Chiller+Boiler	Boiler	204.213	240.251	9.610
	GHP+A2W	GHP (*)	118.225	0	0
		Aquarea	77.031	16.390	2.295
		Back up Boiler	8.957	10.538	422
Total	Chiller+Boiler		532.616	443.171	26.637
	GHP+A2W		532.616	284.409	13.015
	GHP+A2W savings			158.762	13.621

Hotel example: 2.000 m² Hotel 4*, 75 rooms, in Barcelona. Cooling load 170 kWh, Heating Load 142 kWh, HSW 204 kWh/year. Part load calculation at 70%, and 33% of total year at heating mode. Including 10% capacity drop with Water Heat Exchanger. 3 units GHP U-20GE2E5 and Aquarea 9 kW.

With GHP outdoor units:

In heating mode, at very low outdoor temperature -21°C, the available power is maintained. No defrost cycle happens and stable heating comfort is guaranteed.

- Hot water outlet temperatures from 35°C to 55°C
- Chilled water outlet temperatures from -15°C to 15°C
- Outdoor temperature range in cooling mode: -10°C to +43°C
- Minimum outdoor temperature in heating mode: -21°C

ECO G Water Heat Exchanger. Mixed System Application

- The GHP Multi System can have an indoor unit plus a GHP chiller. When the two systems are operated independently, an outdoor unit with 130% capacity can be connected.

SYSTEM EXAMPLE

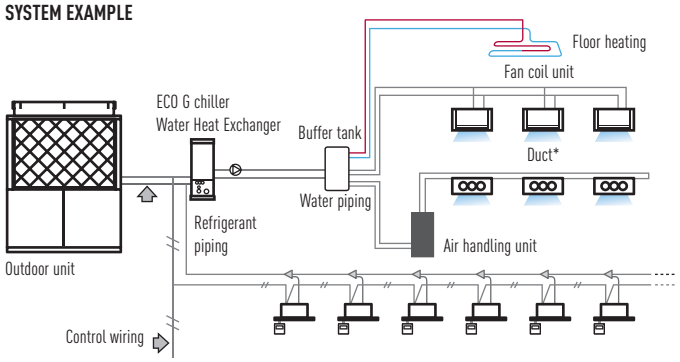

Note: The mode of running of outdoor unit depends on the Water Heat Exchanger's mode. The water pump is not included in the Water Heat Exchanger unit. For simultaneous operation, however, the maximum capacity is 130%. Please inquire details of this system design of Panasonic. * Standard DX type indoor unit system.

ECO G WITH WATER HEAT EXCHANGER

FOR CHILLED AND HOT WATER PRODUCTION

- MORE EFFICIENT THAN GAS BOILERS AND CHILLERS
- HEATING, COOLING AND DHW
- INCREASED ENERGY EFFICIENCY AND LOW CO_2 EM

For hydronic applications

Water Heat Exchanger, dimensions reduced by 45 % (250 W x 2 and 500 W x 2). Operation and control by timer remote control CZ-RTC2. Energy-efficient capacity control. Stainless steel plate heat exchanger with anti-freeze protection control. Change-over between heating and cooling operation.



Water Heat Exchanger*			PAW-250WX2E5	PAW-500WX2E5	PAW-710WX2E5
Nominal Heating Capacity			30	60	80
Heating Capacity at +7°C, heating water temperature at 35°C		kW		62	82.8
COP at +7°C with heating water temperature at 35°C				1,49	1,34
Heating Capacity at +7°C, heating water temperature at 45°C		kW	30	60	80
COP at +7°C with heating water temperature at 45°C				1,30	1,17
Heating Capacity at -7°C, heating water temperature at 35°C		kW		57,2	74,6
COP at -7°C, heating water temperature at 35°C				0,76	0,77
Heating Capacity at -15°C, heating water temperature at 35°C		kW		59,2	77,4
COP at -15°C with heating water temperature at 35°C				0,75	0,76
Nominal Cooling Capacity			25	50	71
Cooling capacity at +35°C, outlet tp 7°C, inlet tp 12°C		kW		50	71
EER at +35°C, outlet tp 7°C, inlet tp 12°C				1,15	1,05
Dimensions	H x W x D	mm	1.000 x 395 x 965	1.000 x 395 x 965	1.000 x 395 x 965
Weight		kg	110	130	150
Water pipe connector			Rp2 Nut thread (50A)	Rp2 Nut thread (50A)	Rp2 Nut thread (50A)
Pump (included)			Field supply	Field supply	Field supply
Heating water flow (ΔT=5 K. 35°C)		l/min	4,3	8,6	12,2
Capacity of integrated electric heater		kW	Not equipped	Not equipped	Not equipped
Input Power		kW	0,01	0,01	0,01
Maximum Current		A	0,07	0,07	0,07
Outdoor unit			-	**U-20GE2E5**	**U-30GE2E5**
Sound pressure		dB(A)		58	63
Sound power level		dB		83	86
Dimensions	H x W x D	mm		2.273 x 1.650 x 1.000	2.273 x 2.026 x 1.000
Weight		kg		780	840
Piping connections	Liquid pipe	mm		28,58	31,75
	Gas pipe	mm		15,88	19,05
Refrigerant (R410A)		kg		11,5 (Need additional charge at site)	11,5 (Need additional charge at site)
Pipe length range	Max.	m		170	170
Pipe length for nominal capacity		m		7	7
Pipe length for additional gas		m		0<	0<
Additional charge (r410a)		g/m		Refer to Manual	Refer to Manual
Elevation difference (in/out)		m	50 (OD above) 35 (OD below)	50 (OD above) 35 (OD below)	50 (OD above) 35 (OD below)
Operation range	Outdoor ambient	°C		-21 — 15,5	-21 — 15,5
	Water outlet (at-2/-7/-15)[2]	°C		35 — 55	35 — 55

Rating Conditions: Cooling Indoor 27°C DB / 19°C WB. Cooling Outdoor 35°C DB / 24°C WB. Heating Indoor 20°C DB. Heating Outdoor 7°C DB / 6°C WB.
DB: Dry Bulb; WB: Wet Bulb

Performance calculation in agreement with Eurovent.
Sound pressure measured at 1 m from the outdoor unit and at 1.5 m height.
* Only with indoors combination. Can not be used as 1 to 1.



PAW-250WX2E5 // PAW-500WX2E5 // PAW-710WX2E5

Technical focus

- New! A class pump included
- Maximum distance between O_U and WHE: 170 m
- Possibility to mix DX and Water Heat Exchanger systems
- Hot water outlet temperatures from 35°C to 55°C
- Chilled water outlet temperatures from -15°C to +15°C
- Outdoor temperature range in cooling mode: -10°C to +43°C
- Minimum outdoor temperature in heating mode: -21°C

Slim & Light design

Due to the unit's internal redesign, the width and weight are drastically reduced.

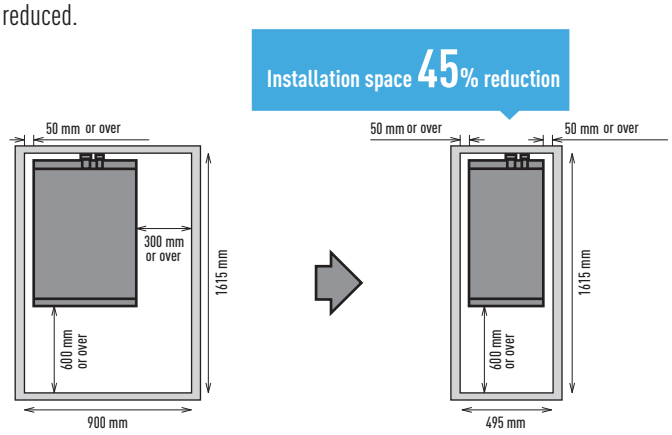

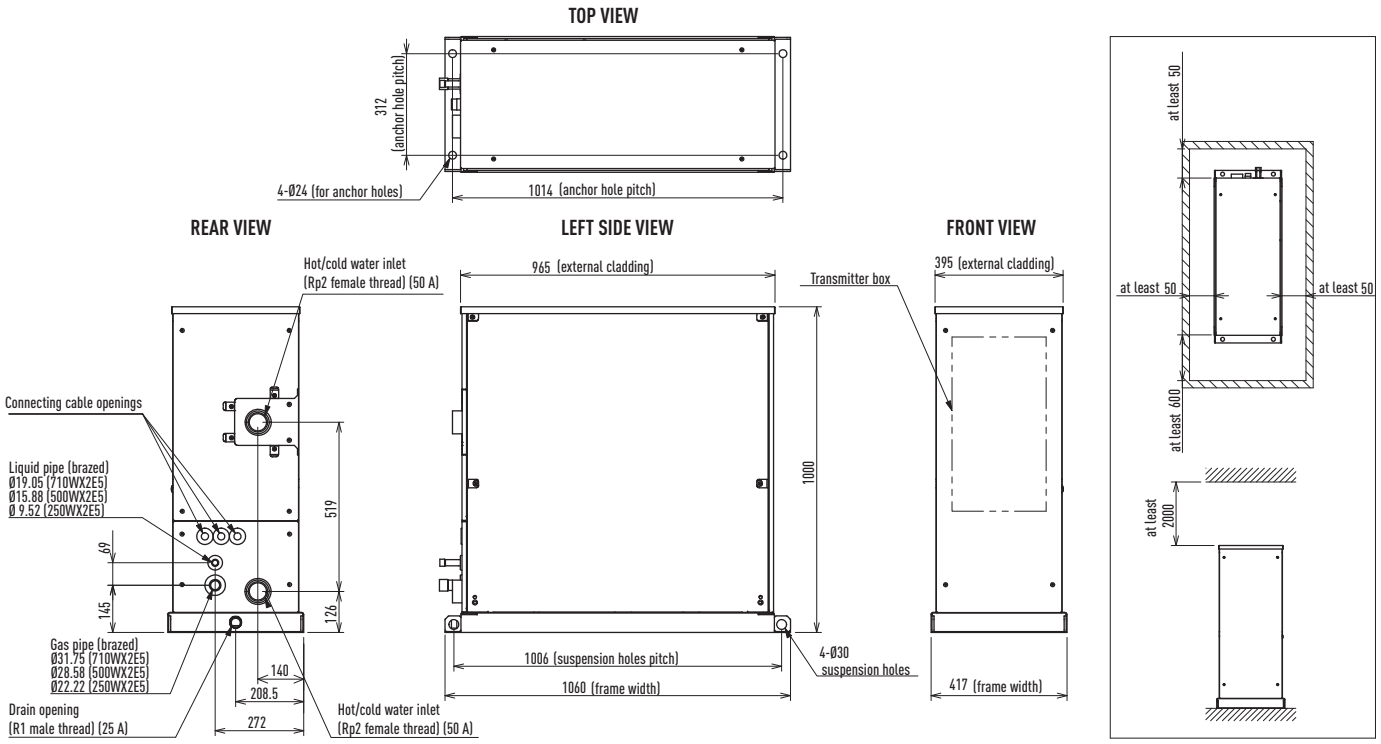

AQUAREA AIR RADIATORS

New line up of Super low temperature radiators for Heat Pump application: Aquarea Air 200/700/900 with radiating effect

The slimline Panasonic Aquarea Air radiators deliver high efficiency climate control. With a depth of just under 13 cm they are at the cutting edge of the market. Blending easily into the home, Aquarea Air's elegant design and product refinements are clear to see in every detail.

The Aquarea Air's slimline profile has been achieved thanks to the innovative layout of the ventilation unit and the heat exchanger. The fan is tangential with asymmetric blades and the large surface heat exchanger enables high airflows to be achieved with low pressure loss and low noise levels. Exceptional ventilation efficiency means the motor uses considerably less energy (low wattage). The fan speed is continuously modulated by the temperature controller with proportional integral logic, with undoubted advantages for regulating the temperature and humidity in summer mode.

All temperature curves and capacity are available on www.panasonicproclub.com

Fan Coils for Heat Pump application		PAW-AAIR-200					PAW-AAIR-700					PAW-AAIR-900				
Without radiant heating		PAW-AAIR-200L					PAW-AAIR-700L					PAW-AAIR-900L				
Total heating capacity	W	138	160	217	470	570	223	360	708	1032	1188	273	475	886	1420	1703
Water flow	kg/h	23,7	27,5	37,3	80,8	98,0	38,4	61,9	121,8	177,5	204,3	47,0	81,7	152,4	244,2	292,9
Water pressure drop	kPa	0,1	0,2	0,4	2,0	2,9	0,1	0,1	0,3	0,8	1,0	0,1	0,2	0,5	1,6	2,2
Air flow	m³/h	28	37	55	113	162	44	84	155	252	320	54	110	248	367	461
	Speed	Main Fan Off	Super Min	Min	Med	Max	Main Fan Off	Super Min	Min	Med	Max	Main Fan Off	Super Min	Min	Med	Max
Maximum input power	W	2	5	7	9	13	3	9	14	18	22	3	11	16	20	24
Sound pressure level	dB(A)	17,6	18,8	24,7	33,2	39,4	18,4	19,6	25,8	34,1	40,2	18,4	22,3	26,2	34,4	42,2
Inlet water temperature	°C	35	35	35	35	35	35	35	35	35	35	35	35	35	35	35
Outlet water temperature	°C	30	30	30	30	30	30	30	30	30	30	30	30	30	30	30
Inlet air temperature	°C	19	19	19	19	19	19	19	19	19	19	19	19	19	19	19
Outlet air temperature	°C	34,5	32,6	38,9	32,0	30,0	34,9	32,4	33,3	31,8	30,6	34,8	32,5	30,2	31,1	30,6
Dimentions (H x W x D)	mm	735 x 576 x 129					935 x 579 x 129					1.135 x 579 x 129				
Weight	kg	17					20					23				
3 ways valve included		Yes					Yes					Yes				
Touch schreen thermostat		Yes					Yes					Yes				

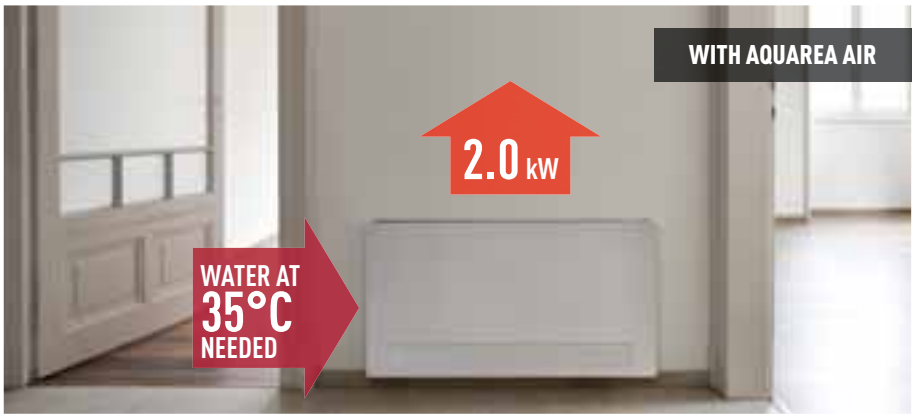

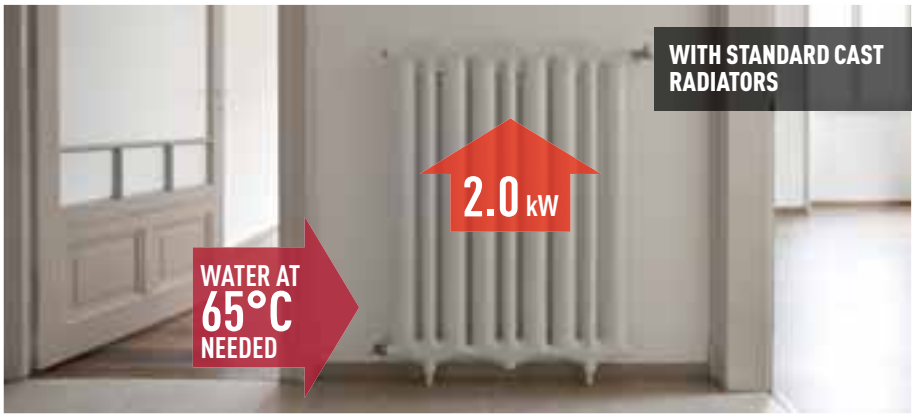



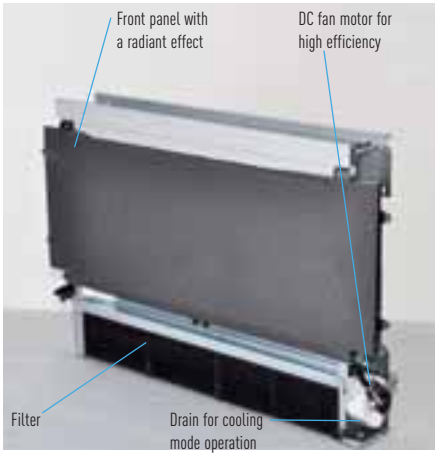



PAW-AAIR-900



PAW-AAIR-700 PAW-AAIR-200

AQUAREA AIR

PAW-AAIR-200 // PAW-AAIR-700 // PAW-AAIR-900
PAW-AAIR-200L // PAW-AAIR-700L // PAW-AAIR-900L

Technical focus

- Front panel heating with radiant effect
- High heating capacity (without main fan running)
- 4 fan speeds and capacities
- Exclusive design
- Extremely compact (only 12.9cm deep)
- Cooling and dehumidification functions possible (drain is needed)
- 3-way valve included (no overflow valve needed on the installation if more than 3 radiators installed)
- Touch screen thermostat

During winter, the operating principle is based on micro fans of very low power consumption and minimum noise that send hot air, coming from the heat exchanger, to the inside of the front panel of the device and therefore heat it effectively. With this principle, the terminal also provides significant power while heating, without running the main fan. Comfort temperatures therefore maintained, without air movements and in silence. In summer mode, the airflow generated by the micro fans is stopped to avoid any dew formation on the terminal's front surface.

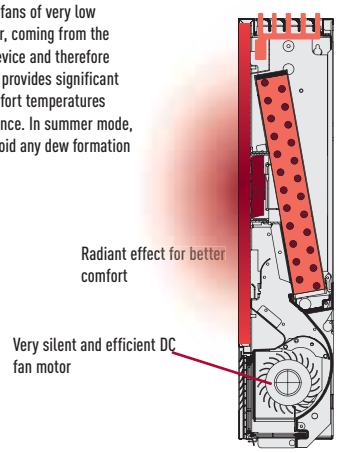

Operating on heating mode with radiator using only radiant effect

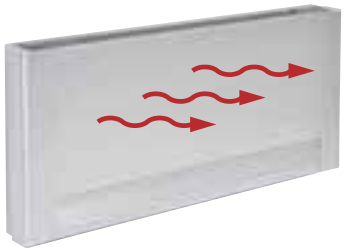

Operating on heating mode with radiant effect and fan mode

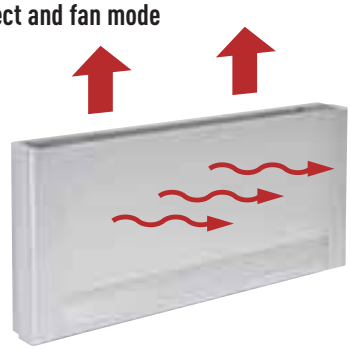

Operating on cooling mode with fan



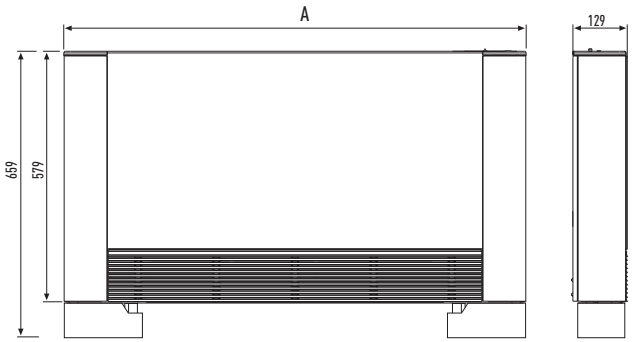

	200	700	900
A	735	935	1.135

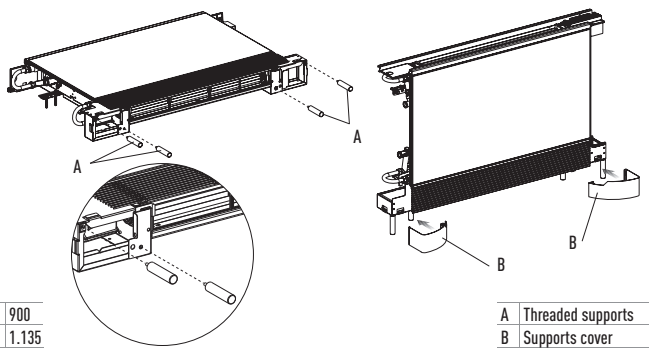

A	Threaded supports
B	Supports cover

Features

High technology features

Down to -25 °C in heating mode
OUTDOOR TEMPERATURE

Wider operation

Thanks to wide operation range of Panasonic ECOi and ECOg systems with Aquarea Air fan coils is possible to cover outdoor temperatures of as -10°C DB for cooling and -21°C WB for heating.

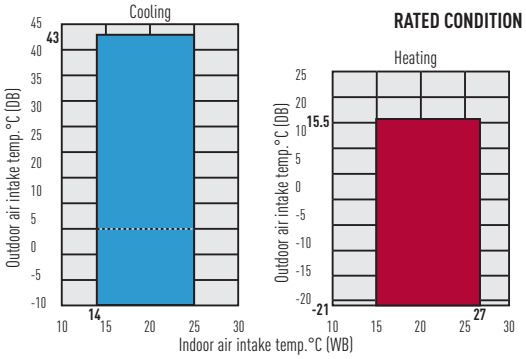

Practical operation
AUTOMATIC RESTART

Automatic restart function for power failure

Even when power failure occurs, preset programmed operation can be reactivated once power is resumed.

Easy maintenance
SELF-DIAGNOSING

Self-diagnosing function

By using electronic control valves past warnings are stored and can be verified on the liquid crystal display. This makes it easier to diagnose malfunctions, greatly reducing service labour and therefore costs.

Simple, convenient features (Indoor Units)

For more comfort
AUTOMATIC FAN

Automatic fan operation

Convenient microprocessor control automatically adjusts fan speed to High, Medium or Low, corresponding to room sensor and maintains comfortable airflow throughout the room.

Comfort everywhere
AIR SWEEP

Air Sweep

The air sweep function moves the flap up and down in the air outlet, directing air in a "sweeping" motion around the room and providing comfort in every corner.

Perfect humidity control
MILD DRY

Mild dry

By intermittent control of compressor and indoor unit's fan, "New Mild Dry" gives you comfort. It realizes efficient dehumidification according to room temperature.

Easy to install
BUILT-IN DRAIN PUMP

Built-in drain pump

Maximum head 50cm (or 75cm for U type) from the bottom of the unit.

Further comfort
AUTO-FLAP CONTROL

Comfortable auto-flap control

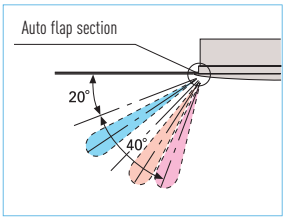

When the unit is first turned on, flap position is automatically adjusted in accordance with the cooling or heating operation. This initial flap position can be preset within a certain range, for both cooling and heating. Auto button is included for continuous movement of flap to vary airflow direction.

Maintenance and inspection is a must for gas heat pump air-conditioning systems.

Just like an automobile, a heat pump air-conditioning system requires periodic servicing so that it can perform efficiently.

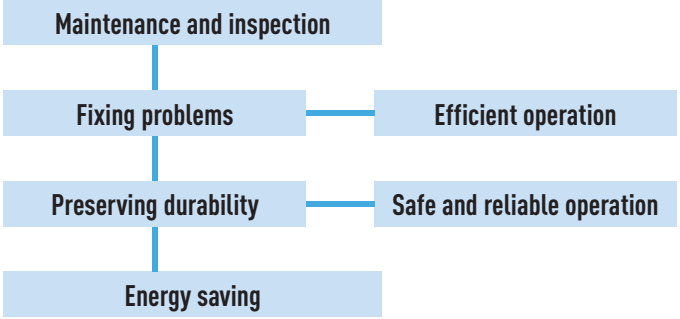

Main maintenance and inspection items

1. Changing the engine oil
2. Checking the coolant level
3. Inspecting the engine system
4. Checking the safety protection system
5. Checking and adjusting the running conditions, collecting operating data, etc.

Since a heat pump air-conditioning system uses a gas engine as its power source, it should be periodically inspected to avoid trouble and keep it running efficiently. We recommend a maintenance contract for your Panasonic Gas Heat Pump, a great value because it not only ensures that problems will be fixed, but it helps reduce running costs and improve comfort and economical efficiency as well.

Panasonic's software

ECOi VRF Designer

Panasonic is pleased to announce the launch of its new Advanced VRF Designer software. Building on the success of the ECOi VRF Designer software, this package provides air conditioning system designers, installers and dealers with a program to design and size projects for Panasonic's VRF ranges.
Similar to the standard VRF Designer software, it is possible to create wiring diagrams, electrical power wiring and issue bills of quantities with a simple push of a button. With Panasonic's Advanced software, designers are now able to work directly from AutoCAD files, making the process extremely easy to manage and time-saving. AutoCAD drawings, print outs and scans from existing designs can be imported and altered with the system therein.

Super-efficient and built for the designers' every need, Panasonic's Advanced VRF software can create life-sized piping designs and automatic length calculation based on their imported drawings.

The Panasonic VRF Designer system software can be used for all Panasonic ECOi 6N and FS Multi VRF.

Features include:
- Easy to use system wizards.
- Auto piping and wiring features.
- Converted duties for conditions and pipework.
- Auto CAD (DXF), Excel and PDF export.
- Detailed wiring and pipework diagram.

Panasonic's Advanced VRF software with AutoCAD® compatibility makes design easier than ever
Panasonic provides bespoke software helping system designers, installers and dealers to very quickly design and size systems, create wiring diagrams and issue bills of quantities at the push of a button.



GHP Checker Software

The handy tool for optimising the running of your system:
Diagnosis for start ups, maintenance and system supervising.

Features:
- Diagnosis with a PC
- Endless recording function allows analysis diagnosis even for long term running
- The GHP checker software needs no additional communication adaptor
- The communication between the PC and GHP is done by RS232



Panasonic VRF Service Checker

Panasonic will make available to installers and commissioning companies the VRF Service Checker as a communication interface to Panasonic VRF systems. This easy to manage tool checks all parameters of the system.

The VRF Service Checker allows:
- On ECOi and Mini ECOi connect anywhere on the P-Link
- Search the P-Link to validate systems that are connected
- Monitor all indoor and outdoor units simultaneously on 1 screen
- Monitor all Temperature data, Pressure data , Valve position, and alarm status on 1 screen
- Data can be viewed in Graph or number format
- Controlling the indoor unit ON/OFF, MODE, SET POINT, FAN, and TEST mode
- Switching between various systems on same communication P-Link (ECOi only)
- Monitor and record at a set interval time
- Record and review the data at a later date
- Update software as ROM flash writer

This Panasonic VRF Service Checker is available from your service partner.


Interface Box



Indoor units for ECOi and ECO G

Wide choice of models depending on the indoor requirements.



4 Way 90x90 Cassette

Wide & Comfortable Airflow

This proprietary design has wide-angle discharge outlets and flaps are larger in the middle, featuring a shape based on a combination of geometrics and the testing of prototype units. Air coming out of the center of the discharge outlets travels farther. From the sides of each outlet, where the openings are larger, airflow spreads out to reach the corners of the room. Air is discharged across a wide area from the four sides of the unit.
The curves on the room temperature distribution graph expand gently out through 360° in a circle centered on the indoor unit.



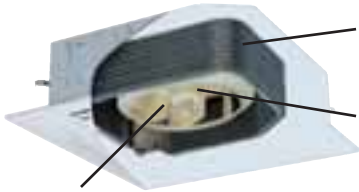

High-efficient & Silent turbo Fan.
It is realized more air volume and more silent due to new development of a bigger fan chassis than previous one and optimization design of airflow path.

Higher efficiency split fin.
Improved heat-transfer coefficient due to adoption of high efficiently grooved heat exchanger tube.

New DC-Fan motor.
It is realized more optimum air-flow by a new DC-fan motor with independent control.

Individual flap control.
Flexible Air flow direction control by individual flap control is possible. 4 Flaps can be controlled individually by setting on wired timer remote controller. Several demands can be accommodated in one space.

Flexible 3D air-flow control

Comfort air flow control & proper energy use. Flexible Air flow direction control by individual flap control:

- 4 Flaps can be controlled individually (by standard wired remote controller*).
- It can make more flexible Air-flow control to be matched to several demands can be accommodated in one space.

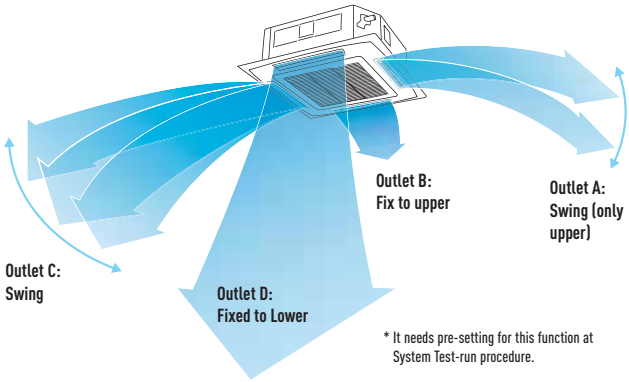

* It needs pre-setting for this function at System Test-run procedure.

New 360º Air Flow for better comfort

By redesigning the air-outlet and flap, Soft & 3D air flow circulates whole space and provides even temperature distribution in the room.

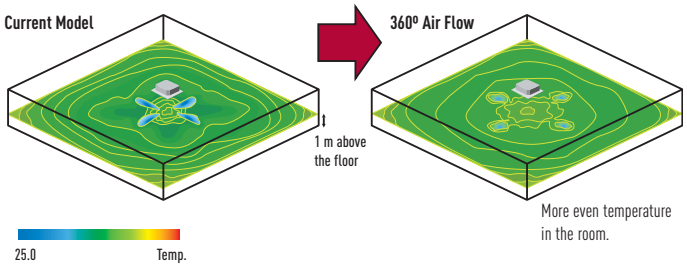

Simulated condition: Floor area: 225 m². Ceiling height: 3 m, Unit 5 HP type.

New design

Wide direction air discharge by outlet design.
The Circle Flow Flap and redesigned air outlet eliminate airflow along recessed parts on the ceiling to reduce contamination. If air flows only along these recessed parts, they will quickly become dirty. These new features greatly reduce accumulations of dirt.

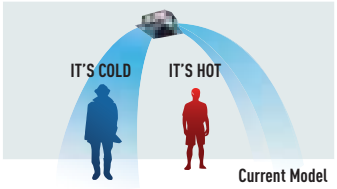

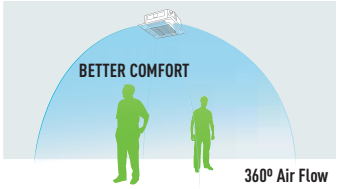

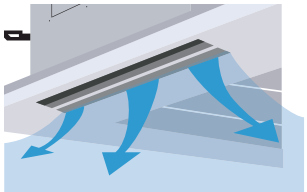

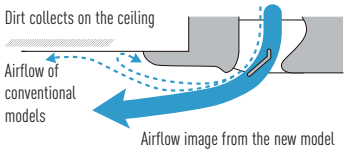

ECOi and ECO G systems indoor units range

	1,5 kW	2,2 kW	2,8 kW	3,0 kW	3,6 kW	4,0 kW	4,5 kW
U1 Type // 4 Way 90x90 Cassette		 S-22MU1E5A	 S-28MU1E5A		 S-36MU1E5A		 S-45MU1E5A
Y2 TYPE // 4 Way 60x60 Cassette	 S-15MY2E5A	 S-22MY2E5A	 S-28MY2E5A		 S-36MY2E5A		 S-45MY2E5A
L1 Type // 2 Way Cassette		 S-22ML1E5	 S-28ML1E5		 S-36ML1E5		 S-45ML1E5
D1 Type // 1 Way Cassette			 S-28MD1E5		 S-36MD1E5		 S-45MD1E5
F2 Type // Variable Static Pressure Hide Away	 S-15MF2E5A	 S-22MF2E5A	 S-28MF2E5A		 S-36MF2E5A		 S-45MF2E5A
M1 Type // Slim Variable Static Pressure Hide Away	 S-15MM1E5A	 S-22MM1E5A	 S-28MM1E5A		 S-36MM1E5A		 S-45MM1E5A
E2 Type // High Static Pressure Hide Away							
Heat Recovery With DX Coil				 PAW-500ZDX2		 PAW-800ZDX2	 PAW-01KZDX2
T2 Type // Ceiling					 S-36MT2E5A		 S-45MT2E5A
K2/K1 Type // Wall Mounted	S-15MK2E5A	S-22MK2E5A	S-28MK2E5A		S-36MK2E5A		 S-45MK1E5A
P1 Type // Floor Standing		 S-22MP1E5	 S-28MP1E5		 S-36MP1E5		 S-45MP1E5
R1 Type // Concealed Floor Standing		S-22MR1E5	S-28MR1E5		S-36MR1E5		S-45MR1E5

Wide choice of models depending on the indoor requirements.

	16,0 kW	28,0 kW	56,0 kW	84,0 kW	112,0 kW	140,0 kW	168,0 kW
AHU Connection Kit 16, 28 and 56 kW for ECOi and ECO G	**PAW-160MAH2**	PAW-280MAH2	PAW-560MAH2	PAW-280MAH2 + PAW-560MAH2	PAW-560MAH2 x 2	PAW-280MAH2 + PAW-560MAH2 x 2	PAW-560MAH2 x 3

5,6 kW	6,0 kW	7,3 kW	9,0 kW	10,6 kW	14,0 kW	16,0 kW	22,4 kW	28,0 kW
 S-56MU1E5A	 S-60MU1E5A	 S-73MU1E5A	 S-90MU1E5A	 S-106MU1E5A	 S-140MU1E5A	 S-160MU1E5A		
 S-56MY2E5A								
 S- 56ML1E5		 S-73ML1E5						
 S-56MD1E5		 S-73MD1E5						
 S-56MF2E5A	 S-60MF2E5A	 S-73MF2E5A	 S-90MF2E5A	 S-106MF2E5A	 S-140MF2E5A	 S-160MF2E5A		
 S-56MM1E5A								
							 S-224ME2E5 S-224ME1E5A	 S-280ME2E5 S-280ME1E5
 S-56MT2E5A		 S-73MT2E5A		 S-106MT2E5A	 S-140MT2E5A			
 S-56MK1E5A		 S-73MK1E5A		 S-106MK1E5A				
 S-56MP1E5		 S-71MP1E5						
 S-56MR1E5		 S-71MR1E5						

	11,4 kW	25,0 kW	31,5 kW	37,5 kW
Air Curtain Jet-Flow with DX Coil	 PAW-10EAIRC-MJ	 PAW-15EAIRC-MJ	 PAW-20EAIRC-MJ	 PAW-25EAIRC-MJ
Air Curtain Standard with DX Coil	 PAW-10EAIRC-MS		 PAW-20EAIRC-MS	

U1 TYPE
4 WAY 90X90 CASSETTE SEMI CONCEALED CASSETTE



360° air flow

The award winning range of U1 type cassettes are smaller, shallower and lighter than previous models and feature a 950 x 950mm panel throughout. The DC fan motor and air discharge louvre ensure quiet, optimum air distribution.

Technical focus
- Compact design
- Reduced sound levels (from previous models)
- DC fan motor for increased efficiency
- Powerful drain pump gives 850mm lift
- Lightweight design
- Fresh air knockout
- Branch duct connection
- Optional air-intake plenum CZ-FDU2

A drain height of approx. 850mm from the ceiling surface
The drain height can be increased by approximately 350mm over the conventional value by using a high-lift drain pump, and long horizontal piping is possible.

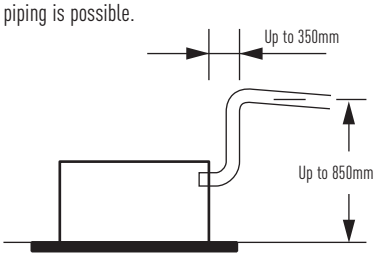



Air intake chamber
1. Air intake box CZ-BCU2 for main unit.
2. Air intake box CZ-ATU2* for Air intake plenum. CZ-CFU2 Part to close air flow for the cassette 90x90 series U1.

* When using Air intake box (CZ-ATU2), Air intake plenum (CZ-FDU2) is required.



Panel
CZ-KPU21



Optional Controller
Wired remote controller
CZ-RTC3



Optional Controller
Timer remote controller
CZ-RTC2



Optional Controller
Wireless remote controller
CZ-RWSU2



Optional Controller
Simplified remote controller
CZ-RE2C2

Model[1]			S-22MU1E5A	S-28MU1E5A	S-36MU1E5A	S-45MU1E5A	S-56MU1E5A	S-60MU1E5A	S-73MU1E5A	S-90MU1E5A	S-106MU1E5A	S-140MU1E5A	S-160MU1E5A
Power source			230 V / Single Phase / 50 Hz										
Cooling capacity		kW	2,2	2,8	3,6	4,5	5,6	6,0	7,3	9,0	10,6	14,0	16,0
Power input cooling		W	20	20	20	20	25	35	40	40	95	100	115
Operating current cooling		A	0,19	0,19	0,19	0,19	0,22	0,31	0,33	0,36	0,71	0,76	0,89
Heating capacity		kW	2,5	3,2	4,2	5,0	6,3	7,1	8,0	10,0	11,4	16,0	18,0
Power input heating		W	20	20	20	20	25	35	40	40	85	100	105
Operating current heating		A	0,17	0,17	0,17	0,17	0,20	0,30	0,32	0,34	0,65	0,73	0,80
Fan type			Turbo fan	Turbo fan	Turbo fan	Turbo fan	Turbo fan	Turbo fan	Turbo fan	Turbo fan	Turbo fan	Turbo fan	Turbo fan
Air volume	Hi / Med / Lo	m^3/h	840/720/660	840/720/660	840/720/660	900/780/720	960/810/720	1.260/1.020/840	1.320/1.020/840	1.380/1.140/900	1.980/1.620/1.260	2.100/1.680/1.320	2.160/1.740/1.380
Sound pressure level	Lo / Med / Hi	dB(A)	28 / 29 / 30	28 / 29 / 30	28 / 29 / 30	28 / 29 / 31	28 / 30 / 33	29 / 32 / 36	29 / 32 / 37	32 / 35 / 38	34 / 38 / 44	35 / 39 / 45	38 / 40 / 46
Dimensions	H x W x D	mm	256 (+33,5) x 840 (950) x 840 (950)								319 (+33,5) x 840 (950) x 840 (950)		
Pipe connections	Liquid	inch (mm)	1/4 (6,35)	1/4 (6,35)	1/4 (6,35)	1/4 (6,35)	1/4 (6,35)	3/8 (9,52)	3/8 (9,52)	3/8 (9,52)	3/8 (9,52)	3/8 (9,52)	3/8 (9,52)
	Gas	inch (mm)	1/2 (12,7)	1/2 (12,7)	1/2 (12,7)	1/2 (12,7)	1/2 (12,7)	5/8 (15,88)	5/8 (15,88)	5/8 (15,88)	5/8 (15,88)	5/8 (15,88)	5/8 (15,88)
	Drain piping		VP-25	VP-25	VP-25	VP-25	VP-25	VP-25	VP-25	VP-25	VP-25	VP-25	VP-25
Net weight		kg	23	23	23	23	23	24	24	24	27	27	27

Rating Conditions: Cooling Indoor 27°C DB / 19°C WB. Cooling Outdoor 35°C DB / 24°C WB. Heating Indoor 20°C DB. Heating Outdoor 7°C DB / 6°C WB.
DB: Dry Bulb; WB: Wet Bulb.

1) Available from April 2014.

Optional

Internet Control Ready – INTERNET CONTROL
Energy saving – INVERTER+
Environmentally friendly refrigerant – R410A
Easy maintenance – SELF-DIAGNOSING
For more comfort – AUTOMATIC FAN
Perfect humidity control – MILD DRY
Further comfort – AUTO-FLAP CONTROL
Practical operation – AUTOMATIC RESTART
Comfort everywhere – AIR SWEEP
Easy to install – BUILT-IN DRAIN PUMP
Easy control by BMS – CONNECTIVITY

Y2 TYPE

4 WAY 60X60 CASSETTE MINI SEMI CONCEALED CASSETTE



Designed to fit exactly into a 600 x 600mm ceiling grid without the need to alter the bar configuration, the Y2 is ideal for small commercial and retrofit applications. In addition, the improvements to efficiency make this one of the most advanced units in the industry.

Technical focus

- Mini cassette fits into a 600 x 600mm ceiling grid
- Fresh air knock out
- Multidirectional air flow
- Powerful drain pump gives 850mm lift
- Turbo fans and heat exchanger fins with improved design
- DC fan motors with variable speed, new heat exchangers, etc. ensure an efficient power consumption

Special designed flap

The flap can be removed easily for washing with water.



A drain height of approx. 850mm from the ceiling surface

The drain height can be increased by approximately 350mm over the conventional value by using a high-lift drain pump, and long horizontal piping is possible.

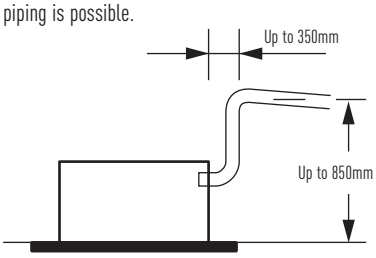

A lightweight unit at 18.4 kg the unit is also very slim with a height of only 288mm, making installation possible even in narrow ceilings.

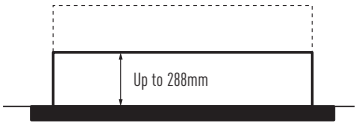



Panel
CZ-KPY3A



Optional Controller
Wired remote controller
CZ-RTC3



Optional Controller
Timer remote controller
CZ-RTC2



Optional Controller
Wireless remote controller
CZ-RWSK2



Optional Controller
Simplified remote controller
CZ-RE2C2

Model[1]			S-15MY2E5A	S-22MY2E5A	S-28MY2E5A	S-36MY2E5A	S-45MY2E5A	S-56MY2E5A
Power source			230 V / Single Phase / 50 Hz					
Cooling capacity		kW	1,5	2,2	2,8	3,6	4,5	5,6
Power input cooling		W	35	35	35	40	40	45
Operating current cooling		A	0,30	0,30	0,30	0,30	0,32	0,35
Heating capacity		kW	1,7	2,5	3,2	4,2	5,0	6,3
Power input heating		W	30	30	30	35	35	40
Operating current heating		A	0,25	0,25	0,30	0,30	0,30	0,30
Fan type				Centrifugal fan	Centrifugal fan	Centrifugal fan	Centrifugal fan	Centrifugal fan
Air volume	Cooling	m^3/h	534 / 492 / 336	546 / 492 / 336	558 / 504 / 336	582 / 522 / 360	600 / 558 / 492	624 / 588 / 510
(Hi / Med / Lo)	Heating	m^3/h	546 / 504 / 336	558 / 504 / 336	576 / 522 / 336	594 / 546 / 360	618 / 576 / 492	666 / 588 / 522
Sound pressure level	Cooling	dB(A)	25 / 33 / 34	25 / 33 / 35	25 / 33 / 35	26 / 34 / 36	33 / 36/ 38	34 / 37 / 40
(Lo / Med / Hi)	Heating	dB(A)	25 / 33 / 34	25 / 33 / 35	25 / 33 / 35	26 / 34 / 36	32 / 36/ 38	34 / 37 / 40
Dimensions	H x W x D	mm	288 (+31) x 583 (700) x 583 (700)					
Pipe connections	Liquid	inch (mm)	1/4 (6,35)	1/4 (6,35)	1/4 (6,35)	1/4 (6,35)	1/4 (6,35)	1/4 (6,35)
	Gas	inch (mm)	1/2 (12,7)	1/2 (12,7)	1/2 (12,7)	1/2 (12,7)	1/2 (12,7)	1/2 (12,7)
	Drain piping		VP-25	VP-25	VP-25	VP-25	VP-25	VP-25
Net weight		kg	20,4 (18 + 2,4)	20,4 (18 + 2,4)	20,4 (18 + 2,4)	20,4 (18 + 2,4)	20,4 (18 + 2,4)	20,4 (18 + 2,4)

Rating Conditions: Cooling Indoor 27°C DB / 19°C WB. Cooling Outdoor 35°C DB / 24°C WB. Heating Indoor 20°C DB. Heating Outdoor 7°C DB / 6°C WB.
DB: Dry Bulb; WB: Wet Bulb.

1) Available from April 2014.

Optional



L1 TYPE
2 WAY CASSETTE



Slim, compact and lightweight units. Remarkable size and weight reductions have been achieved by improvement of the design around the fan, the weight of all models now being 30 kg.

Technical focus
- Airflow and distribution is automatically altered depending on the operational mode of the unit
- Drain up is possible up to 500mm from the drain port
- Simple maintenance

Simple maintenance
The drain pan is equipped with site wiring and can be removed. The fan case has a split construction, and the fan motor can be removed easily when the lower case is removed.

Airflow and distribution is automatically altered depending on the operational mode of the unit.

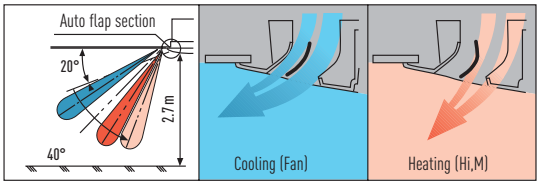

Drain up is possible up to 500mm from the drain port.

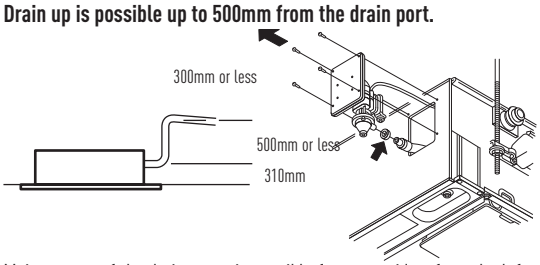

Maintenance of the drain pump is possible from two sides, from the left side (piping side) and from the inside of the unit.



PANEL
CZ-02KPL2
CZ-03KPL2 (for S-73ML1E5)



Optional Controller
Wired remote controller
CZ-RTC3



Optional Controller
Timer remote controller
CZ-RTC2



Optional Controller
Wireless remote controller
CZ-RWSL2



Optional Controller
Simplified remote controller
CZ-RE2C2

Model			S-22ML1E5	S-28ML1E5	S-36ML1E5	S-45ML1E5	S-56ML1E5	S-73ML1E5
Power source			230 V / Single Phase / 50 Hz					
Cooling capacity		kW	2,2	2,8	3,6	4,5	5,6	7,3
Power input cooling		W	90	92	93	97	97	145
Operating current cooling		A	0,45	0,45	0,45	0,45	0,45	0,65
Heating capacity		kW	2,5	3,2	4,2	5,0	6,3	8,0
Power input heating		W	58	60	61	65	65	109
Operating current heating		A	0,29	0,29	0,29	0,29	0,29	0,48
Fan type			Sirocco fan	Sirocco fan	Sirocco fan	Sirocco fan	Sirocco fan	Sirocco fan
Air volume	Hi / Med / Lo	m^3/h	480 / 420 / 360	540 / 480 / 420	580 / 520 / 460	660 / 540 / 480	660 / 540 / 480	1.140 / 960 / 840
Sound pressure level	Lo / Med / Hi	dB(A)	24 / 27 / 30	26 / 29 / 33	28 / 31 / 34	29 / 33 / 35	29 / 33 / 35	33 / 35 / 38
Dimensions	H x W x D	mm	350(+8)x840 (1.060)x600 (680)	350(+8)x840 (1.060)x600 (680)	350(+8)x840 (1.060)x600 (680)	350(+8)x840 (1.060)x600 (680)	350(+8)x840 (1.060)x600 (680)	350(+8)x1.140 (1.360)x600 (680)
Pipe connections	Liquid	inch (mm)	1/4 (6,35)	1/4 (6,35)	1/4 (6,35)	1/4 (6,35)	1/4 (6,35)	3/8 (9,52)
	Gas	inch (mm)	1/2 (12,7)	1/2 (12,7)	1/2 (12,7)	1/2 (12,7)	1/2 (12,7)	5/8 (15,88)
	Drain piping		VP-25	VP-25	VP-25	VP-25	VP-25	VP-25
Net weight		kg	28,5 (23 + 5,5)	28,5 (23 + 5,5)	28,5 (23 + 5,5)	28,5 (23 + 5,5)	28,5 (23 + 5,5)	39 (30 + 9)

Rating Conditions: Cooling Indoor 27°C DB / 19°C WB. Cooling Outdoor 35°C DB / 24°C WB. Heating Indoor 20°C DB. Heating Outdoor 7°C DB / 6°C WB.
DB: Dry Bulb; WB: Wet Bulb.

Optional

Internet Control Ready – INTERNET CONTROL
Energy saving – INVERTER+
Environmentally friendly refrigerant – R410A
Easy maintenance – SELF-DIAGNOSING
For more comfort – AUTOMATIC FAN
Perfect humidity control – MILD DRY
Further comfort – AUTO-FLAP CONTROL
Practical operation – AUTOMATIC RESTART
Comfort everywhere – AIR SWEEP
Easy to install – BUILT-IN DRAIN PUMP
Easy control by BMS – CONNECTIVITY

D1 TYPE
1 WAY CASSETTE



Designed for installation within the ceiling void, the D1 range of slimline 1 way blow cassettes feature powerful yet quiet fans for up to 4.2 m.

Technical focus

- Ultra-Slim
- Suitable for standard and high ceilings
- Built-in drain pump provides 590mm lift
- Easy to install and maintain
- Hanging height can be easily adjusted
- Uses a DC fan motor to improve energy-efficiency

Drain height

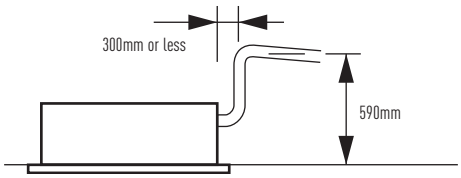



Panel
CZ-KPD2



Optional Controller
Wired remote controller
CZ-RTC3



Optional Controller
Timer remote controller
CZ-RTC2



Optional Controller
Wireless remote controller
CZ-RWST2



Optional Controller
Simplified remote controller
CZ-RE2C2

Model			S-28MD1E5	S-36MD1E5	S-45MD1E5	S-56MD1E5	S-73MD1E5
Power source			230 V / Single Phase / 50 Hz				
Cooling capacity		kW	2,8	3,6	4,5	5,6	7,3
Power input cooling		W	51	51	51	60	87
Operating current cooling		A	0,39	0,39	0,39	0,46	0,7
Heating capacity		kW	3,2	4,2	5,0	6,3	8,0
Power input heating		W	40	40	40	48	76
Operating current heating		A	0,35	0,35	0,35	0,41	0,65
Fan type			Sirocco fan	Sirocco fan	Sirocco fan	Sirocco fan	Sirocco fan
Air volume	Hi / Med / Lo	m^3/h	720 / 600 / 540	720 / 600 / 540	720 / 660 / 600	780 / 690 / 600	1.080 / 900 / 780
Sound pressure level	Lo / Med / Hi	dB(A)	33 / 34 / 36	33 / 34 / 36	34 / 35 / 36	34 / 36 / 38	36 / 40 / 45
Dimensions	H x W x D	mm	200 (+20)x1.000 (1.230)x710 (800)	200 (+20)x1.000 (1.230)x710 (800)	200 (+20)x1.000 (1.230)x710 (800)	200 (+20)x1.000 (1.230)x710 (800)	200 (+20)x1.000 (1.230)x710 (800)
Pipe connections	Liquid	inch (mm)	1/4 (6,35)	1/4 (6,35)	1/4 (6,35)	1/4 (6,35)	3/8 (9,52)
	Gas	inch (mm)	1/2 (12,7)	1/2 (12,7)	1/2 (12,7)	1/2 (12,7)	5/8 (15,88)
	Drain piping		VP-25	VP-25	VP-25	VP-25	VP-25
Net weight		kg	26,5 (21 + 5,5)	26,5 (21 + 5,5)	26,5 (21 + 5,5)	26,5 (21 + 5,5)	27,5 (22 + 5,5)

Rating Conditions: Cooling Indoor 27°C DB / 19°C WB. Cooling Outdoor 35°C DB / 24°C WB. Heating Indoor 20°C DB. Heating Outdoor 7°C DB / 6°C WB.
DB: Dry Bulb; WB: Wet Bulb.

Optional



F2 TYPE
VARIABLE STATIC PRESSURE HIDE AWAY



S-15MF2E5A // S-22MF2E5A // S-28MF2E5A // S-36MF2E5A // S-45MF2E5A // S-56MF2E5A

S-60MF2E5A // S-73MF2E5A // S-90MF2E5A

S-106MF2E5A // S-140MF2E5A // S-160MF2E5A

The new F2 type is designed specifically for applications requiring fixed square ducting. The internal filter is equipped as standard.

Technical focus

- Industry-leading low sound levels from 25 dB(A)
- Built-in drain pump provides 785mm lift
- Easy to install and maintain
- Air OFF sensor avoids cold air dumping
- Configurable air temperature control

More powerful drain pump

Using a high-lift drain pump, drain piping can be elevated up to 785mm from the base of the unit.

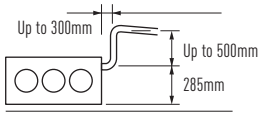

Air Outlet & Inlet Plenum

S-...MF2E5A	Diameters	Air Outlet Plenum	Diameters	Air Inlet Plenum
22, 28, 36, 45 & 56	2 x Ø 200	CZ-56DAF2	2 x Ø 200	CZ-DUMPA56MF2
60, 73 & 90	3 x Ø 200	CZ-90DAF2	2 x Ø 250	CZ-DUMPA90MF2
106, 140 & 160	4 x Ø 200	CZ-160DAF2	4 x Ø 200	CZ-DUMPA160MF2



Air Outlet Plenum

Air Inlet Plenum

New Variable Static Pressure Hide Away MF2 series

Standardized height of 290mm for all models. Height standardization enables easy and uniform installation for models with different capacities.

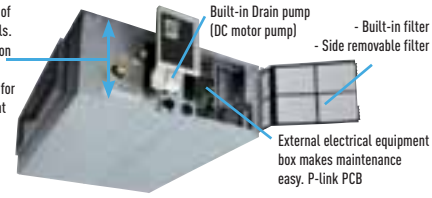

Full range of External Static Pressure and Airflow Volumes available by special setting

To meet all design needs thanks to DC fan motor it is possible to select the best fitted airflow/ static pressure curve.
The table below shows the airflow and noise data at minimum airflows curve selectable (Example S-22MF2E5A: see red dot in the diagram n.1) and noise data at maximum rated static pressure with maximum airflow curve selectable (example S-22MF2E5A blu dot in diagram n.1). Specific diagrams per each units are available in ECOi Technical Data Book.

Model		15-36	45	56	60-73	90	106	140	160
Minimum air volume - the red dot - on minimum airflow curve selectable (curve 1-3)	m³/h	480	480	600	780	960	1.140	1.200	1.320
Min Static Pressure value - the red dot - on minimum airflow curve selectable (curve 1-3)	Pa	15	15	15	10	10	20	15	15
Noise level at minimum static pressure -the red dot - on minimum airflow curve selectable (curve 1-3)	dB(A)	24	26	26	24	26	29	30	31
Noise level at maximum rated static pressure -the blue dot - on maximum airflow curve selectable (curve 15)	dB(A)	34	35	35	40	41	42	42	43

F2 Advantages

Automatic learning function for the required static pressure, to be activated easily by the standard wired timer remote controller.
Possible to increase the sensible cooling capacity by adjusting the air volume flow in order to almost completely eliminate latent losses.
This is possible due to the outstanding big heat exchanger surface in combination with increasing the air volume flow by a manual selection of higher fan speed curves through the standard wired remote controller when commissioning the system together with the default active off-coil temperature control and the room load based variable evaporation temperature control.

Diagram n. 1 S-22MF2E5A

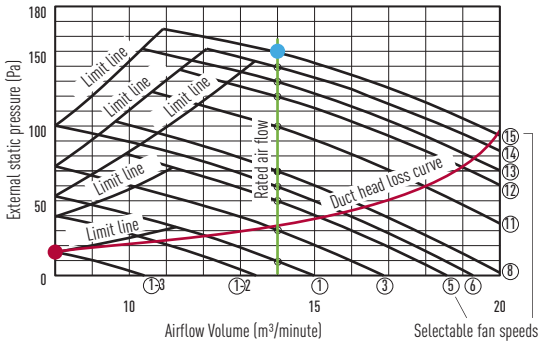

Optional Controller
Wired remote controller
CZ-RTC3



Optional Controller
Timer remote controller
CZ-RTC2



Optional Controller
Wireless remote controller
CZ-RWSK2 + CZ-RWSC3



Optional Controller
Simplified remote controller
CZ-RE2C2

Model[1]			S-15MF2E5A	S-22MF2E5A	S-28MF2E5A	S-36MF2E5A	S-45MF2E5A	S-56MF2E5A	S-60MF2E5A	S-73MF2E5A	S-90MF2E5A	S-106MF2E5A	S-140MF2E5A	S-160MF2E5A
Power source			230 V / Single Phase / 50 Hz											
Cooling capacity		kW	1,5	2,2	2,8	3,6	4,5	5,6	6,0	7,3	9,0	10,6	14,0	16,0
Power input cooling		W	70	70	70	70	70	100	120	120	135	195	215	225
Operating current cooling		A	0,57	0,57	0,57	0,57	0,57	0,74	0,89	0,89	0,97	1,30	1,44	1,50
Heating capacity		kW	1,7	2,5	3,2	4,2	5,0	6,3	7,1	8,0	10,0	11,4	16,0	18,0
Power input heating		W	70	70	70	70	100	100	120	120	135	200	210	225
Operating current heating		A	0,57	0,57	0,57	0,57	0,57	0,74	0,89	0,89	0,97	1,34	1,42	1,50
Fan type			Sirocco fan	Sirocco fan	Sirocco fan	Sirocco fan	Sirocco fan	Sirocco fan	Sirocco fan	Sirocco fan	Sirocco fan	Sirocco fan	Sirocco fan	Sirocco fan
Air volume[2]	Hi / Med / Lo	m³/h	840/780/540	840/780/540	840/780/540	840/780/540	840/780/600	960/900/720	1.260/1.140/900	1.260/1.140/900	1.500/1.380/1.140	1.920/1.560/1.260	2.040/1.740/1.380	2.160/1.920/1.500
External static pressure		Pa	70 (10-150)	70 (10-150)	70 (10-150)	70 (10-150)	70 (10-150)	70 (10-150)	70 (10-150)	70 (10-150)	70 (10-150)	100 (10-150)	100 (10-150)	100 (10-150)
Sound power level[3]	Lo / Med / Hi	dB	44 / 51 / 55	44 / 51 / 55	44 / 51 / 55	44 / 51 / 55	47 / 54 / 56	47 / 54 / 56	48 / 54 / 57	48 / 54 / 57	50 / 56 / 59	53 / 56 / 60	54 / 57 / 61	55 / 58 / 62
Sound pressure level[3]	Lo / Med / Hi	dB(A)	22 / 29 / 33	22 / 29 / 33	22 / 29 / 33	22 / 29 / 33	25 / 32 / 34	25 / 32 / 34	26 / 32 / 35	26 / 32 / 35	28 / 34 / 37	31 / 34 / 38	32 / 35 / 39	33 / 36 / 40
Dimensions	H x W x D	mm	290x800x700	290x800x700	290x800x700	290x800x700	290x800x700	290x800x700	290x1.000x700	290x1.000x700	290x1.000x700	290x1.400x700	290x1.400x700	290x1.400x700
Pipe connections	Liquid	inch (mm)	1/4 (6,35)	1/4 (6,35)	1/4 (6,35)	1/4 (6,35)	1/4 (6,35)	1/4 (6,35)	3/8 (9,52)	3/8 (9,52)	3/8 (9,52)	3/8 (9,52)	3/8 (9,52)	3/8 (9,52)
	Gas	inch (mm)	1/2 (12,7)	1/2 (12,7)	1/2 (12,7)	1/2 (12,7)	1/2 (12,7)	1/2 (12,7)	5/8 (15,88)	5/8 (15,88)	5/8 (15,88)	5/8 (15,88)	5/8 (15,88)	5/8 (15,88)
	Drain piping		VP-25	VP-25	VP-25	VP-25	VP-25	VP-25	VP-25	VP-25	VP-25	VP-25	VP-25	VP-25
Net weight		kg	29	29	29	29	29	29	34	34	34	46	46	46

Rating Conditions: Cooling Indoor 27°C DB / 19°C WB. Cooling Outdoor 35°C DB / 24°C WB. Heating Indoor 20°C DB. Heating Outdoor 7°C DB / 6°C WB.
DB: Dry Bulb; WB: Wet Bulb.

1) Available from April 2014. 2) Value referred to standard settings at shipment (H curve 8, M curve 5, L curve 1). 3) Sound pressure without refrigerant flow.

Optional



M1 TYPE
SLIM VARIABLE STATIC PRESSURE HIDE AWAY CONCEALED DUCT



The ultra slim M1 type is one of the leading products of its type in the industry. With a depth of only 200mm it provides greater flexibility and can be used in far more applications. In addition, its high-efficiency and extremely quiet sound levels make it very popular with many users, including hotels and small offices.

Technical focus

- Ultra-slim profile: 200mm for all models
- DC fan motor greatly reduces power consumption
- Ideal for hotel application with very narrow false ceilings
- Easy maintenance and service by external electrical box
- 40 Pa static pressure enables ductwork to be fitted.
- Includes drain pump

Air Outlet & Inlet Plenum

S-...MM1E5A	Diameters	Air Outlet Plenum	Diameters	Air Inlet Plenum
22 , 28 & 36	2 x Ø 200	CZ-DUMPA22MMS2	2 x Ø 200	CZ-DUMPA22MMR2
45 & 56	3 x Ø 160	CZ-DUMPA45MMS3	2 x Ø 200	CZ-DUMPA22MMR3

Ultra-slim profile for all models



Drain pump with increased power!

By adoption of a high-lift drain pump, the drain piping rise height can be increased to 785mm from the lower surface of the body.

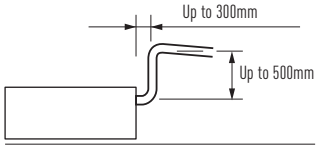



Optional Controller
Wired remote controller
CZ-RTC3



Optional Controller
Timer remote controller
CZ-RTC2



Optional Controller
Wireless remote controller
CZ-RWSK2 + CZ-RWSC3



Optional Controller
Simplified remote controller
CZ-RE2C2

Model[1]			S-15MM1E5A	S-22MM1E5A	S-28MM1E5A	S-36MM1E5A	S-45MM1E5A	S-56MM1E5A
Power source			230 V / Single Phase / 50 Hz					
Cooling capacity		kW		2.2	2.8	3.6	4.5	5.6
Power input cooling		W		36	40	42	49	64
Operating current cooling		A		0.26	0.30	0.31	0.37	0.48
Heating capacity		kW		2.5	3.2	4.2	5.0	6.3
Power input heating		W		26	30	32	39	54
Operating current heating		A		0.23	0.27	0.28	0.34	0.45
Fan type				Sirocco fan	Sirocco fan	Sirocco fan	Sirocco fan	Sirocco fan
Air volume	Hi / Med / Lo	m^3/h		480 / 420 / 360	510 / 450 / 390	540 / 480 / 420	630 / 570 / 480	750 / 690 / 600
External static pressure		Pa		10 (30)	15 (30)	15 (40)	15 (40)	15 (40)
Sound pressure level	Lo / Med / Hi (2)	dB(A)		25 / 27 / 28 (27 / 29 / 30)	27 / 29 / 30 (29 / 31 / 32)	28 / 30 / 32 (30 / 32 / 34)	30 / 32 / 34 (32 / 34 / 36)	31 / 33 / 35 (32 / 35 / 37)
Dimensions	H x W x D	mm		200 x 750 x 640	200 x 750 x 640	200 x 750 x 640	200 x 750 x 640	200 x 750 x 640
Pipe connections	Liquid	inch (mm)		1/4 (6.35)	1/4 (6.35)	1/4 (6.35)	1/4 (6.35)	1/4 (6.35)
	Gas	inch (mm)		1/2 (12.7)	1/2 (12.7)	1/2 (12.7)	1/2 (12.7)	1/2 (12.7)
	Drain piping			VP-20	VP-20	VP-20	VP-20	VP-20
Net weight		kg		19	19	19	19	19

Rating Conditions: Cooling Indoor 27°C DB / 19°C WB. Cooling Outdoor 35°C DB / 24°C WB. Heating Indoor 20°C DB. Heating Outdoor 7°C DB / 6°C WB.
DB: Dry Bulb; WB: Wet Bulb.

1) Available from November 2014. 2) With booster cable using short circuit connection.

Optional



E2 TYPE
HIGH STATIC PRESSURE HIDE AWAY



2 products in 1: High pressure duct and 100% Fresh air duct function. The E2 range of ducted units offers improved design flexibility for extended duct layouts as a result of their increased external static pressures and reduces energy consumption.

Technical focus
- **NEW!** No need of rap valve
- **NEW!** 100% Fresh air duct function
- **NEW!** DC fan motor for more savings
- Complete flexibility for ductwork design
- Can be located into a weatherproof housing for external siting
- Air OFF sensor avoids cold air dumping
- Configurable air temperature control

System example
An inspection port (450 x 450mm or more) is required at the lower side of the indoor unit body (field supply).

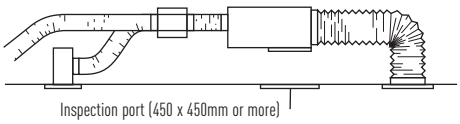

100% Fresh air duct function
The New E2 duct with 100% fresh air duct function have exeptional discharge temperature.

	Discharge Range		
	Min	Max	Default
Colling	15°C	24°C	18°C
Heating	17°C	45°C	40°C

Plenums

Air Outlet Plenum (suitable for rigid + flexible duct)		
	N. of exits with diameters	Model
S-224ME1E5A / S-280ME1E5	1 x 500mm	CZ-TREMIESPW706



Optional Controller
Wired remote controller
CZ-RTC3



Optional Controller
Timer remote controller
CZ-RTC2



Optional Controller
Wireless remote controller
CZ-RWSK2 + CZ-RWSC3



Optional Controller
Simplified remote controller
CZ-RE2C2

			100% Fresh air duct function		High pressure duct	
Model			**S-224ME2E5**	**S-280ME2E5**	**S-224ME1E5A**	**S-280ME1E5**
Power source			230 V / Single Phase / 50 Hz	230 V / Single Phase / 50 Hz	230 V / Single Phase / 50 Hz	230 V / Single Phase / 50 Hz
Cooling capacity		kW	22,4	28,0	22,4	28,0
Power input cooling		W	490	750	1.310	1.330
Operating current cooling		A	2,7	4,2	5,98	6,06
Heating capacity		kW	25,0	31,5	25,0	31,5
Power input heating		W	470	730	1.310	1.330
Operating current heating		A	2,6	4,1	5,98	6,06
Fan type			Sirocco fan	Sirocco fan	Sirocco fan	Sirocco fan
Air volume	Hi / Med / Lo	m^3/h	3.360 / 3.180 / 2.940	4.320 / 3.780 / 2.940	4.320 / 4.200 / 3.960	4.320 / 4.200 / 3.960
External static pressure		Pa	140 (50 / 270)[1]	140 (50 / 270)[1]	216 (235)[2]	216 (235)[2]
Sound pressure level[3]	Lo / Med / Hi	dB(A)	47 / 46 / 44	50 / 48 / 45	49 / 50 / 51 (50 / 51 / 52)[2]	49 / 50 / 51 (50 / 51 / 52)[2]
Dimensions	H x W x D	mm	467 x 1.428 x 1.230	467 x 1.428 x 1.230	479 x 1.428 x 1.230	479 x 1.428 x 1.230
Pipe connections	Liquid	inch (mm)	3/8 (9,52)	3/8 (9,52)	3/8 (9,52)	3/8 (9,52)
	Gas	inch (mm)	7/8 (22,22)	7/8 (22,22)	7/8 (22,22)	7/8 (22,22)
	Drain piping		VP-25	VP-25	VP-25	VP-25
Net weight		kg	105	110	120	120

Rating Conditions: Cooling Indoor 27°C DB / 19°C WB. Cooling Outdoor 35°C DB / 24°C WB. Heating Indoor 20°C DB. Heating Outdoor 7°C DB / 6°C WB.
Rating Conditions for 100% Fresh air duct function: Cooling Outdoor 33°C DB / 28°C WB. Heating Outdoor 0°C DB / -2,9°C WB.
DB: Dry Bulb; WB: Wet Bulb.

1) Available to select the setting by initial setup.
2) With booster cable.
3) Values with 140Pa setting.

Optional

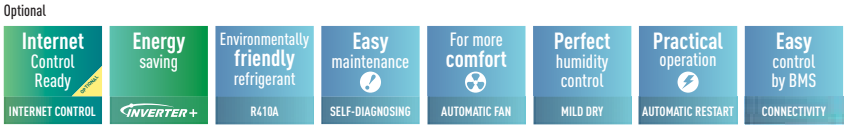

HEAT RECOVERY
WITH DX COIL

Bioxigen®
your best indoor air quality





Optional Controller
Wired remote controller
CZ-RTC3



Optional Controller
Timer remote controller
CZ-RTC2

Technical focus
- Motorised heat recovery by-pass device automatically controlled by unit control to use fresh air free-cooling when convenient
- The Bioxigen® purifying system, activates when the fan runs, provides an efficient antibacterial treatment, ensuring optimum health of supplied air

General characteristics
- Galvanized steel self-supporting panels, internally and externally insulated
- Counterflow air-to-air heat recovery device, made of sheets of special paper with special sealing to keep airflows separate and only permeable to water vapor. Total heat exchange with temperature efficiency up to 77% and enthalpy efficiency up to 63%, also at high level during summer season
- G4 efficiency class filters with synthetic cleanable media, both on fresh air and return air intake
- Removable side panel to access filters and heat recovery in the event of scheduled maintenance
- Low consumption, high efficiency & low noise direct driven fans with 3-speed EC motors
- Supply section complete with DX coil (R410A) fitted with solenoid control valve, freon filter, contact temperature sensors on liquid and gas line, NTC sensors upstream and downstream airflow
- Built-in electric box equipped with PCB to control internal fan speed and to interconnect outdoor/indoor units
- Duct connection by circular plastic collars
- CZ-RTC2 Timer remote controller (option)

Balanced Ventilation

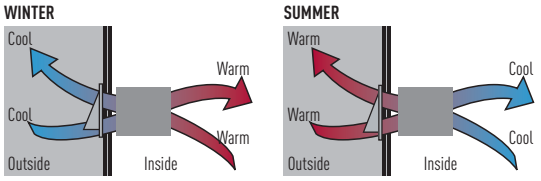

Interconnection to outdoor/indoor units

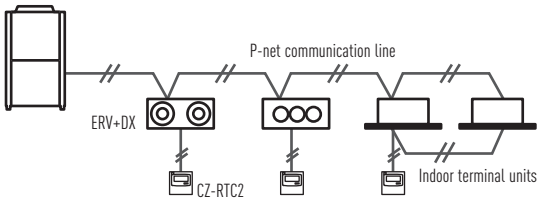

Characteristic curves
The following curves show the unit external static pressure at maximum fan speed for each model.

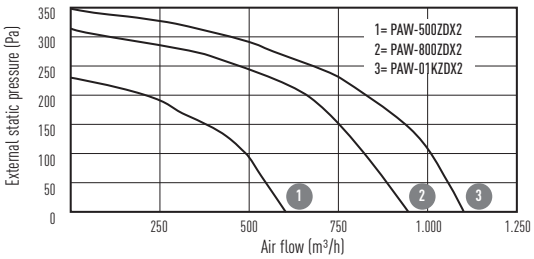

Model[1]			PAW-500ZDX2	PAW-800ZDX2	PAW-01KZDX2
Power source			230 V / Single Phase / 50 Hz	230 V / Single Phase / 50 Hz	230 V / Single Phase / 50 Hz
Air volume	Hi / Med / Lo	m³/h	500 / 500 / 360	800 / 800 / 625	1.000 / 780 / 650
External static pressure[2]	Hi / Med / Lo	Pa	85 / 45 / 21	117 / 68 / 18	104 / 69 / 17
Maximum current		A	1,1	2,3	2,5
Maximum power input		W	135	300	310
Sound pressure level[3]	Hi / Med / Lo	dB(A)	33 / 31 / 27	38 / 36 / 32	39 / 37 / 33
Pipe connections	Liquid / Gas	inch (mm)	1/4 (6,35) / 1/2 (12,7)	1/4 (6,35) / 1/2 (12,7)	1/4 (6,35) / 1/2 (12,7)
HEAT RECOVERY					
Temperature efficiency summer mode		%	62,5	59	59,5
Enthalpy efficiency summer mode		%	60	57	57,5
Saved power summer mode		kW	1,7	2,5	3,2
Temperature efficiency winter mode		%	76,5 (76,5)	73 (73)	73,5 (73,5)
Enthalpy efficiency winter mode		%	62,3 (64,1)	59 (60,8)	59,5 (61,2)
Saved power winter mode		kW	4,3 (4,8)	6,5 (7,3)	8,2 (9,0)
DX COIL					
Total cooling capacity		kW	3,7	4,9	5,6
Sensible cooling capacity		kW	2,3	3,3	3,8
Off temperature	Cooling	°C	14,4	16,2	17,0
Off relative humidity	Cooling	%	87	83	82
Total heating capacity		kW	3,9 (4,1)	5,4 (5,7)	6,3 (6,7)
Off temperature	Heating	°C	35,4 (34,6)	32,6 (31,7)	31,3 (30,3)
Off relative humidity	Heating	%	11 (11)	12 (13)	13 (14)

Nominal summer conditions: Outside air: 32°C DB, RH 50%. Ambient air: 26°C DB, RH 50%. Nominal winter conditions: Outside air: -5°C (-10°C) DB, RH 80%. Ambient air: 20°C DB, RH 50%. Cooling mode air inlet condition: 28.5°C DB, RH 50%; evaporating temp. 4°C. Heating mode air inlet condition: 13°C DB, RH 40% (11°C DB, RH 45%); condensating temperature 49°C. DB: Dry Bulb; RH: Relative Humidity.
1) Available in December 2014. 2) Referred to the nominal air flow after filter and plate heat exchanger. 3) Referred to 1.5 meters from inlet in free field condition.
Optional

Internet Control Ready — INTERNET CONTROL
Energy saving — INVERTER+
Environmentally friendly refrigerant — R410A
Easy maintenance — SELF-DIAGNOSING
For more comfort — AUTOMATIC FAN
Perfect humidity control — MILD DRY
Further comfort — AUTO-FLAP CONTROL
Practical operation — AUTOMATIC RESTART
Comfort everywhere — AIR SWEEP
Easy control by BMS — CONNECTIVITY

T2 TYPE
CEILING



S-36MT2E5A // S-45MT2E5A // S-56MT2E5A

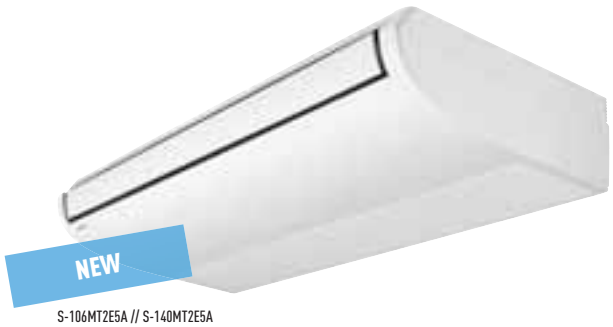

S-106MT2E5A // S-140MT2E5A

The T2 TYPE ceiling mounted units feature a DC fan motor for increased efficiency and reduced operating sound levels. All the units are the same height and depth for a uniform appearance in mixed installations and feature a fresh air knockout for improved air quality.

Technical focus
- Low sound levels
- New design, all units just 235mm high
- Large and wide air distribution
- Easy to install and maintain
- Fresh air knockout

Further comfort improvement
The wide air discharge opening widens the air flow to the left and the right, so that a comfortable temperature is obtained in the entire room. The unpleasant feeling caused when the air flow directly hits the human body is prevented by the "Draft prevention position", which changes the swing width, so that the degree of comfort is increased.

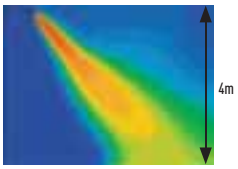

Further comfort improvement with airflow distribution

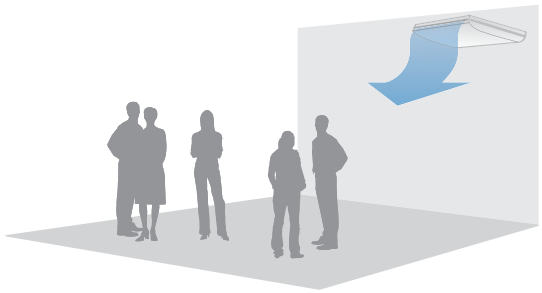

Air distribution is automatically altered depending on the operational mode of the unit

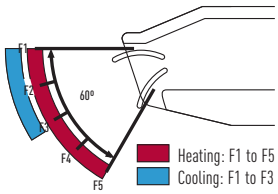



Optional Controller
Wired remote controller
CZ-RTC3



Optional Controller
Timer remote controller
CZ-RTC2



Optional Controller
Wireless remote controller
CZ-RWSK2 + CZ-RWST3



Optional Controller
Simplified remote controller
CZ-RE2C2

Model[1]			S-36MT2E5A	S-45MT2E5A	S-56MT2E5A	S-73MT2E5A	S-106MT2E5A	S-140MT2E5A
Power source			230 V / Single Phase / 50 Hz					
Cooling capacity		kW	3,6	4,5	5,6	7,3	10,6	14,0
Power input cooling		W	35	40	40	55	80	100
Operating current cooling		A	0,36	0,38	0,38	0,44	0,67	0,79
Heating capacity		kW	4,2	5,0	6,3	8,0	11,4	16,0
Power input heating		W	35	40	40	55	80	100
Operating current heating		A	0,36	0,38	0,38	0,44	0,67	0,79
Fan type			Sirocco fan	Sirocco fan	Sirocco fan	Sirocco fan	Sirocco fan	Sirocco fan
Air volume	Hi / Med / Lo	m^3/h	840 / 720 / 630	900 / 750 / 630	900 / 750 / 630	1.260 / 1.080 / 930	1.800 / 1.500 / 1.380	1.920 / 1.680 / 1.440
Sound pressure level	LL[2] / Lo / Med / Hi	dB(A)	30 / 32 / 36	30 / 33 / 37	30 / 33 / 37	33 / 35 / 39	36 / 37 / 42	37 / 40 / 46
Dimensions	H x W x D	mm	235 x 960 x 690	235 x 960 x 690	235 x 960 x 690	235 x 1.275 x 690	235 x 1.590 x 690	235 x 1.590 x 690
Pipe connections	Liquid	inch (mm)	1/4 (6,35)	1/4 (6,35)	1/4 (6,35)	3/8 (9,52)	3/8 (9,52)	3/8 (9,52)
	Gas	inch (mm)	1/2 (12,7)	1/2 (12,7)	1/2 (12,7)	5/8 (15,88)	5/8 (15,88)	5/8 (15,88)
	Drain piping		VP-20	VP-20	VP-20	VP-20	VP-20	VP-20
Net weight		kg	27	27	27	33	40	40

Rating Conditions: Cooling Indoor 27°C DB / 19°C WB. Cooling Outdoor 35°C DB / 24°C WB. Heating Indoor 20°C DB. Heating Outdoor 7°C DB / 6°C WB.
DB: Dry Bulb; WB: Wet Bulb.

1) Available from May 2014.
2) Sound pressure level with fan only.
* Preliminary data.

Optional



K2/K1 TYPE
WALL MOUNTED



S-15MK2E5A // S-22MK2E5A // S-28MK2E5A // S-36MK2E5A



S-45MK1E5A // S-56MK1E5A // S-73MK1E5A // S-106MK1E5A



Optional Controller
Wired remote controller
CZ-RTC3



Optional Controller
Timer remote controller
CZ-RTC2



Optional Controller
Wireless remote controller
CZ-RWSK2



Optional Controller
Simplified remote controller
CZ-RE2C2

The K2/K1 Type wall mounted unit has a stylish smooth panel which not only looks good but is also easy to clean.
The unit is also smaller, lighter and substantially quieter than previous models making it ideal for small offices and other commercial applications.

Technical focus

- Closed discharge port
- Lighter and smaller units make the installation easy
- Quiet operation
- Smooth and durable design
- Piping outlet in three directions
- Washable front panel
- Air distribution is automatically altered depending on the operational mode of the unit

Closed discharge port

When the unit is turned OFF, the flap closes completely to prevent entry of dust into the unit and to keep the equipment clean.

Lighter and smaller units make the installation easy

The width has been decreased by 17% and the units are lighter.

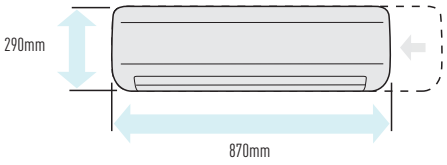

Quiet operation

These units are among the quietest in the industry, making them ideal for hotels and hospitals.

Smooth and durable design

The smooth cover means these units match most modern interiors. Their compact size enables them to blend in, even in small spaces.

Piping outlet in three directions

Piping outlet is possible in the three directions of rear, right, and left, making the installation work easier.

Washable front panel

The indoor unit's front panel can be easily removed and washed for trouble-free cleaning.

Air distribution is automatically altered depending on the operational mode of the unit

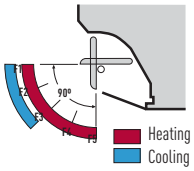

External valve (Optional)

CZ-P56SVK2 (model sizes 15 to 56)
CZ-P160SVK2 (model sizes 73 to 106)



Model[1]			S-15MK2E5A	S-22MK2E5A	S-28MK2E5	S-36MK2E5	S-45MK1E5A	S-56MK1E5A	S-73MK1E5A	S-106MK1E5A
Power source				230 V / Single Phase / 50 Hz						
Cooling capacity		kW	1,5	2,2	2,8	3,6	4,5	5,6	7,3	10,6
Power input cooling		W	25	25	25	30	20	30	57	60
Operating current cooling		A	0,20	0,21	0,23	0,25	0,26	0,35	0,58	0,62
Heating capacity		kW	1,7	2,5	3,2	4,2	5,0	6,3	8,0	11,4
Power input heating		W	25	25	25	30	20	30	57	68
Operating current heating		A	0,20	0,21	0,23	0,25	0,26	0,35	0,58	0,70
Fan type			Cross flow	Cross flow	Cross flow	Cross flow	Cross flow	Cross flow	Cross flow	Cross flow
Air volume	Hi / Med / Lo	m^3/h	474 / 444 / 390	540/450/390	570/498/390	654/540/390	720 / 630 / 510	840 / 720 / 630	1.080 / 870 / 690	1.140 / 990 / 780
		m^3/h	540 / 462 / 408	552/498/408	582/510/408	672/570/408				
Sound pressure level	LI[2] / Lo / Med / Hi	dB(A)	– / 29 / 32 / 34	– / 29 / 33 / 36	– / 29 / 34 / 37	– / 29 / 36 / 40	– / 30 / 34 / 38	– / 32 / 36 / 40	– / 40 / 44 / 47	– / 42 / 45 / 49
Dimensions	H x W x D	mm	290 x 870 x 214	290 x 870 x 214	290 x 870 x 214	290 x 870 x 214	300 x 1.065 x 230	300 x 1.065 x 230	300 x 1.065 x 230	300 x 1.065 x 230
Pipe connections	Liquid	inch (mm)	1/4 (6,35)	1/4 (6,35)	1/4 (6,35)	1/4 (6,35)	1/4 (6,35)	1/4 (6,35)	3/8 (9,52)	3/8 (9,52)
	Gas	inch (mm)	1/2 (12,7)	1/2 (12,7)	1/2 (12,7)	1/2 (12,7)	1/2 (12,7)	1/2 (12,7)	5/8 (15,88)	5/8 (15,88)
	Drain piping (O.D.)		φ 16	φ 16	φ 16	φ 16	φ 18	φ 18	φ 18	φ 18
Net weight		kg	9	9	9	9	13	13	14,5	14,5

Rating Conditions: Cooling Indoor 27°C DB / 19°C WB. Cooling Outdoor 35°C DB / 24°C WB. Heating Indoor 20°C DB. Heating Outdoor 7°C DB / 6°C WB.
DB: Dry Bulb; WB: Wet Bulb.

1) Available from April 2014.
2) Sound pressure level with fan only.

Optional



P1 TYPE
FLOOR STANDING



The compact floor standing P1 units are the ideal solution for providing perimeter air conditioning. The standard wired controller can be incorporated into the body of the unit.

Technical focus

- Pipes can be connected to either side of the unit from the bottom or rear
- Easy to install
- Front panel opens fully for easy maintenance
- Removable air discharge grille gives flexible air flow
- Room for condensate pump

A standard wired remote control can be installed in the body



Effective perimeter handling

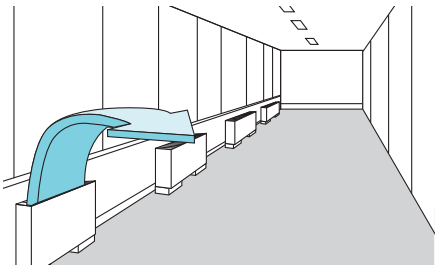



Optional Controller
Wired remote controller
CZ-RTC3



Optional Controller
Timer remote controller
CZ-RTC2



Optional Controller
Wireless remote controller
CZ-RWSK2 + CZ-RWSC3



Optional Controller
Simplified remote controller
CZ-RE2C2

Model			S-22MP1E5	S-28MP1E5	S-36MP1E5	S-45MP1E5	S-56MP1E5	S-71MP1E5
Power source			230 V / Single Phase / 50 Hz					
Cooling capacity		kW	2,2	2,8	3,6	4,5	5,6	7,1
Power input cooling		W	56	56	85	126	126	160
Operating current cooling		A	0,25	0,25	0,38	0,56	0,56	0,72
Heating capacity		kW	2,5	3,2	4,2	5,0	6,3	8,0
Power input heating		W	40	40	70	91	91	120
Operating current heating		A	0,18	0,18	0,31	0,41	0,41	0,54
Fan type			Sirocco fan	Sirocco fan	Sirocco fan	Sirocco fan	Sirocco fan	Sirocco fan
Air volume	Hi / Med / Lo	m^3/h	420 / 360 / 300	420 / 360 / 300	540 / 420 / 360	720 / 540 / 480	900 / 780 / 660	1.020 / 840 / 720
Sound pressure level	Lo / Med / Hi	dB(A)	28 / 30 / 33	28 / 30 / 33	29 / 35 / 39	31 / 35 / 38	31 / 36 / 39	35 / 38 / 41
Dimensions	H x W x D	mm	615 x 1.065 x 230	615 x 1.065 x 230	615 x 1.065 x 230	615 x 1.380 x 230	615 x 1.380 x 230	615 x 1.380 x 230
Net weight		kg	29	29	29	39	39	39
Pipe connections	Liquid	inch (mm)	1/4 (6,35)	1/4 (6,35)	1/4 (6,35)	1/4 (6,35)	1/4 (6,35)	3/8 (9,52)
	Gas	inch (mm)	1/2 (12,7)	1/2 (12,7)	1/2 (12,7)	1/2 (12,7)	1/2 (12,7)	5/8 (15,88)
	Drain piping		VP-20	VP-20	VP-20	VP-20	VP-20	VP-20

Rating Conditions: Cooling Indoor 27°C DB / 19°C WB. Cooling Outdoor 35°C DB / 24°C WB. Heating Indoor 20°C DB. Heating Outdoor 7°C DB / 6°C WB.
DB: Dry Bulb; WB: Wet Bulb.

Optional



R1 TYPE
CONCEALED FLOOR STANDING



At just 229mm deep, the R1 unit can be easily concealed in perimeter areas to provide powerful and effective air conditioning.

Technical focus
- Chassis unit for discreet installation
- Complete with removable filters
- Pipes can be connected to either side of the unit from the bottom or rear
- Easy to install

Perimeter air conditioning with high interior quality

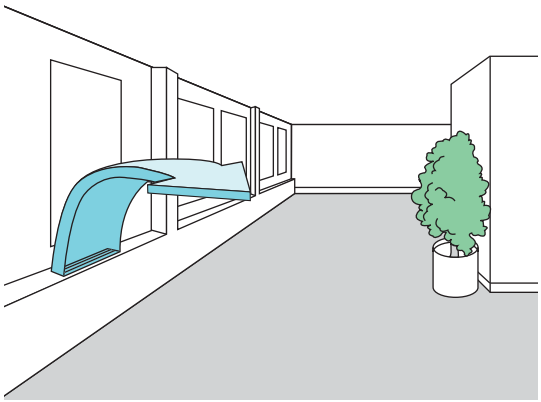



Optional Controller
Wired remote controller
CZ-RTC3



Optional Controller
Timer remote controller
CZ-RTC2



Optional Controller
Wireless remote controller
CZ-RWSK2 + CZ-RWSC3



Optional Controller
Simplified remote controller
CZ-RE2C2

Model			S-22MR1E5	S-28MR1E5	S-36MR1E5	S-45MR1E5	S-56MR1E5	S-71MR1E5
Power source			230 V / Single Phase / 50 Hz					
Cooling capacity		kW	2,2	2,8	3,6	4,5	5,6	7,1
Power input cooling		W	56	56	85	126	126	160
Operating current cooling		A	0,25	0,25	0,38	0,56	0,56	0,72
Heating capacity		kW	2,5	3,2	4,2	5,0	6,3	8,0
Power input heating		W	40	40	70	91	91	120
Operating current heating		A	0,18	0,18	0,31	0,41	0,41	0,54
Fan type			Sirocco fan	Sirocco fan	Sirocco fan	Sirocco fan	Sirocco fan	Sirocco fan
Air volume	Hi / Med / Lo	m^3/h	420 / 360 / 300	420 / 360 / 300	540 / 420 / 360	720 / 540 / 480	900 / 780 / 660	1.020 / 840 / 720
Sound pressure level	Lo / Med / Hi	dB(A)	28 / 30 / 33	28 / 30 / 33	29 / 35 / 39	31 / 35 / 38	31 / 36 / 39	35 / 38 / 41
Dimensions	H x W x D	mm	616 x 904 x 229	616 x 904 x 229	616 x 904 x 229	616 x 1.219 x 229	616 x 1.219 x 229	616 x 1.219 x 229
Net weight		kg	21	21	21	28	28	28
Pipe connections	Liquid	inch (mm)	1/4 (6,35)	1/4 (6,35)	1/4 (6,35)	1/4 (6,35)	1/4 (6,35)	3/8 (9,52)
	Gas	inch (mm)	1/2 (12,7)	1/2 (12,7)	1/2 (12,7)	1/2 (12,7)	1/2 (12,7)	5/8 (15,88)
	Drain piping		VP-20	VP-20	VP-20	VP-20	VP-20	VP-20

Rating Conditions: Cooling Indoor 27°C DB / 19°C WB. Cooling Outdoor 35°C DB / 24°C WB. Heating Indoor 20°C DB. Heating Outdoor 7°C DB / 6°C WB.
DB: Dry Bulb; WB: Wet Bulb.

Optional





Panasonic Ventilation Solutions

For maximum savings and easy integration.

Air Handling Unit Kit
Connects easily to your ECOi and ECO G systems.

Energy Recovery Ventilator
Energy recovery ventilators offer ventilation which increases comfort and saves energy. They efficiently recover the heat lost in ventilation during the heat recovery process.

Air Handling Unit Kit

New AHU Kits connect ECOi and GHP systems to air handling unit systems, using the same refrigerant circuit as the VRF system.



Air Curtain with DX Coil

High efficiency Air curtain connected to your VRF installation. EC Fan motor for a smooth operation and efficient performance.



Energy Recovery Ventilator

Suppresses indoor temperature changes while providing fresh air.



AHU connection kit 16 kW, 28 kW and 56 kW for ECOi and GHP

Heat exchanger, Fan & Fan motor to be mounted in AHU Kit shall be provided in the field.
AHU connection Kit (field supplied) AHU Kit system. (Contents of kit: Control for PCB, expansion valve, sensors).
Application: Hotels, offices, server rooms or all large buildings where air quality control such as humidity control and fresh air and is needed.
AHU Kit combine air conditioning and fresh air in just one solution.

Air Curtain with DX Coil

Highly efficient heating effect

The combined air stream, which has a desirable low air current induction factor (mixing factor), can carry the selected initial temperature effect over long distances, and will reach the floor area while still at room temperature. This is necessary to avoid cooling down the interior spaces.

Energy Recovery Ventilator

- Counter-flow heat exchange element used for reduced noise and slimmer, more compact body shape
- All maintenance can be performed through a single inspection hole
- Straight air supply / exhaust system used for easier installation
- Each unit can be mounted in reverse position.
- Equipped with an Extra-High setting
- Can incorporate a medium performance filter (optional, installed on site)





NEW

16kW // IP65 //
COMPACT BODY

Air Handling Unit Kit

New AHU Kits connect ECOi and ECO G systems to air handling unit systems, using the same refrigerant circuit as the VRF system.
Large connectivity possibilities mean the Panasonic AHU Kit can be easily integrated.
Application: Hotels, offices, server rooms or all large buildings where air quality control such as humidity control and fresh air and is needed.

AHU Connection Kit



PCB, Power trans, Terminal block



Expansion valve



Thermistor x2 (Refrigerant: E1, E3)



Thermistor x2 (Air: Tf, Tb)

Remote controller



Standard wired remote controller (optional).
Can be installed inside the box.

Panasonic AHU Kit, 16-56 kW connected to ECOi or ECO G outdoor unit
PCB, Transformer, Solenoid Control Valve, Thermistor x 4 pcs, Terminal Base and Electrical Component Box.

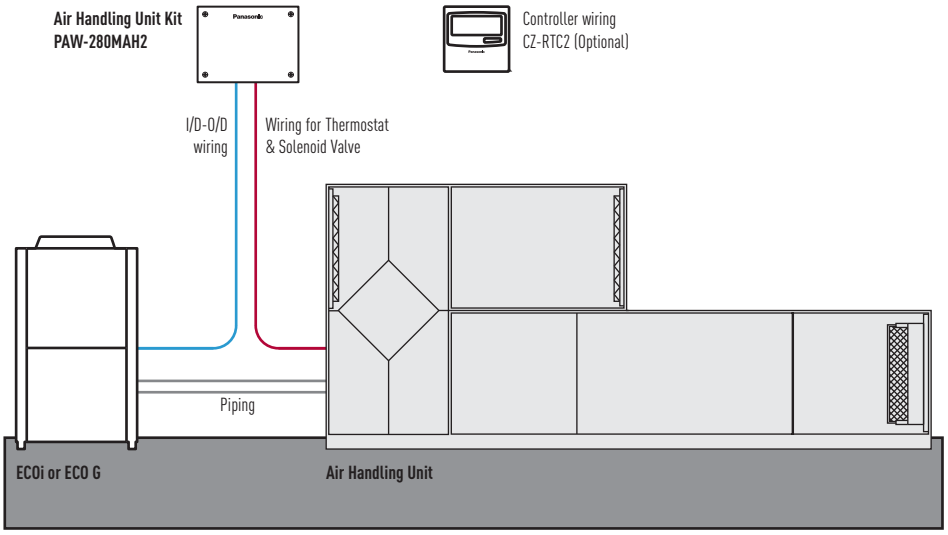

System example for large capacity (more than 56 kW)
3 x [PCB, Transformer, Solenoid Control Valve, Thermistor x 4 pcs, Terminal Base and Electrical Component Box].

EXAMPLE 140 kW SYSTEM

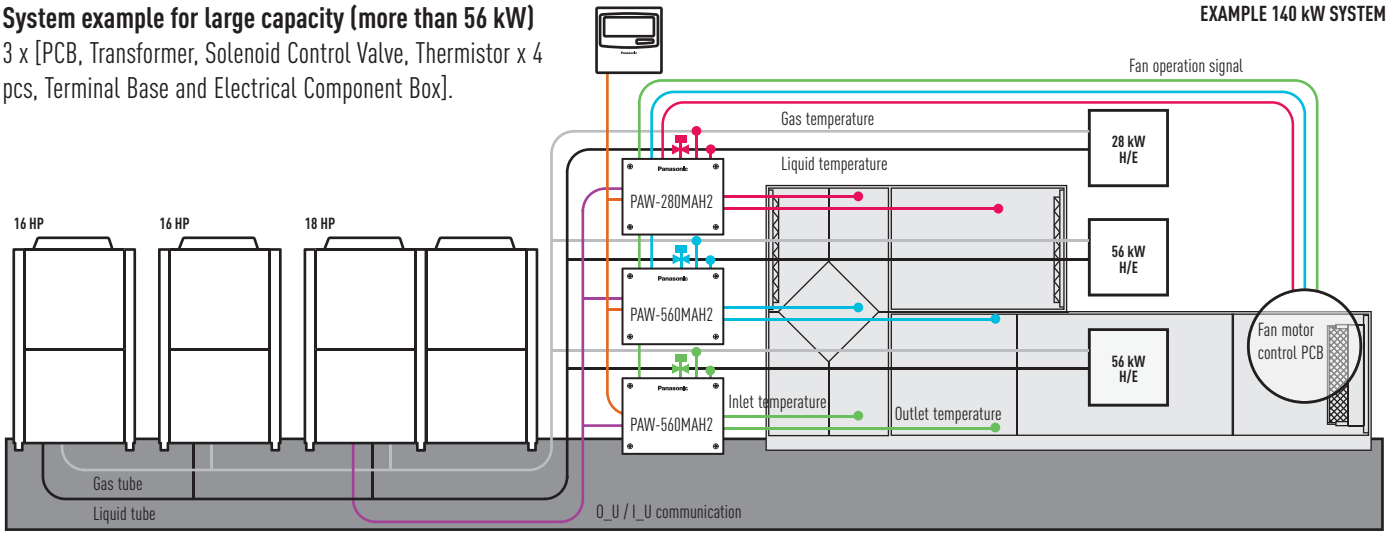

Optional parts: Following functions are available by using different control accessories:

CZ-RTC2 Timer remote controller
- Operation-ON/OFF
- Mode select
- Temperature setting

* Fan operation signal can be taken from the PCB.

CZ-T10 terminal
- Input signal= Operation ON/OFF
- Remote controller prohibition
- Output signal= Operating-ON status
- Alarm output (by DC12V)

PAW-OCT, DC12 V outlet. OPTION terminal
- Output signal= Cooling/Heating/Fan status
- Defrost
- Thermostat-ON

PAW-T10 PCB to connect to T10 connector
- A Dry contact PCB has been developed to easily control the unit
- Input signal operation ON/OFF
- Remote control prohibition
- Output signal Operation ON status maximum 230 V 5 A (NO/NC)
- Output signal Alarm status maximum 230 V 5 A (NO/NC)
- **Additional available contacts:**
  - External humidifier control (ON/OFF) 230 VAC 3 A
  - External fan control (ON/OFF) 12V DC
  - External filter status signal potential free
  - External float switch signal potential free
  - External leakage detection sensor or TH. OFF contact potential free (possible usage for external blow out temperature control)

CZ-CAPBC2 Mini seri-para I/O unit
- Demand control 40% to 120% (5% steps) by 0-10V input signal
- Temperature setting by 0-10 V or 0-140 Ω input signal
- Room (inlet air) temp outlet by 4-20 mA
- Mode select or/and ON/OFF control
- Fan operation control
- Operation status output/ Alarm output
- Thermostat ON/OFF control

AHU CONNECTION KIT

16, 28 AND 56 kW FOR ECOi AND GHP

NEW

16kW // IP65 // COMPACT BODY

6N series 2-Pipe ECOi outdoor unit shall be used for AHU connection KIT.
3 models for VRF system: 5 HP (PAW-160MAH2), 10 HP (PAW-280MAH2) and 20 HP (PAW-560MAH2).

With GHP outdoor units:

- One AHU kit may be used for one GHP unit (2 way, 56 kW). Multiple AHU kits cannot be used
- Mixed with standard indoor units is not allowed
- Power specifications are Single Phase 220 V to 240 V

HP			5 HP	10 HP	20 HP	30 HP	40 HP	50 HP	60 HP
Model			PAW-160MAH2	PAW-280MAH2	PAW-560MAH2	PAW-280MAH2 + PAW-560MAH2	PAW-560MAH2 + PAW-560MAH2	PAW-560MAH2 + PAW-560MAH2 + PAW-280MAH2	PAW-560MAH2 + PAW-560MAH2 + PAW-560MAH2
Nominal cooling capacity @ 50Hz		kW	14,0	28,0	56,0	84,0	112,0	140,0	168,0
Nominal heating @ 50Hz		kW	16,0	31,5	63,0	95,0	127,0	155,0	189,0
Cooling airflow	High	m^3/min	2.160	5.000	10.000	15.000	20.000	25.000	30.000
	Low	m^3/min	1.140	3.500	7.000	10.500	14.000	17.500	21.000
Bypass factor			0,9 (recommended)	0,9 (recommended)	0,9 (recommended)	0,9 (recommended)	0,9 (recommended)	0,9 (recommended)	0,9 (recommended)
Dimensions of the box	H x W x D	mm	303 x 232 x 110	404 x 425 x 78	404 x 425 x 78	404 x 425 x 78	404 x 425 x 78	404 x 425 x 78	404 x 425 x 78
Weight		kg	3,2	6,3	6,3	6,3	6,3	6,3	6,3
Piping length	Min / Max	m	10 / 100	10 / 100	10 / 100	10 / 100	10 / 100	10 / 100	10 / 100
Elevation difference (in/out)	Max	m	10	10	10	10	10	10	10
Piping connections	Liquid pipe	Inch (mm)	3/8 (9,52)	3/8 (9,52)	5/8 (15,88)	3/4 (19,05)	3/4 (19,05)	3/4 (19,05)	3/4 (19,05)
	Gas pipe	Inch (mm)	5/8 (15,88)	7/8 (22,22)	1 1/8 (28,58)	1 1/4 (31,75)	1 1/2 (38,15)	1 1/2 (38,15)	1 1/2 (38,15)
Intake temperature of AHU Kit	Cooling (Min / Max)	°C	18-32°C DB (13-23°C WB)	18 - 32°C DB (13 - 23°C WB)	18 - 32°C DB (13 - 23°C WB)	18 - 32°C DB (13 - 23°C WB)	18 - 32°C DB (13 - 23°C WB)	18 - 32°C DB (13 - 23°C WB)	18 - 32°C DB (13 - 23°C WB)
	Heating (Min / Max)	°C	16-30°C DB	16 - 30°C TK	16 - 30°C TK	16 - 30°C TK	16 - 30°C TK	16 - 30°C TK	16 - 30°C TK
Ambient temperature of outdoor unit	Cooling (Min / Max)	°C	-10 - 34°C DB	-10 - 34°C DB	-10 - 34°C DB	-10 - 34°C DB	-10 - 34°C DB	-10 - 34°C DB	-10 - 34°C DB
	Heating (Min / Max)	°C	-10 - 15°C WB	-10 - 15°C WB	-10 - 15°C WB	-10 - 15°C WB	-10 - 15°C WB	-10 - 15°C WB	-10 - 15°C WB

AHU connection kit / System combination							
Capacity (HP)	Outdoor unit combination			AHU kit combination			
28 kW (10 HP)	U-10ME1E81			PAW-280MAH2			
56 kW (20 HP)	U-20ME1E81			PAW-560MAH2			
84 kW (30 HP)	U-16ME1E81	U-14ME1E81		PAW-560MAH2	PAW-280MAH2		
112 kW (40 HP)	U-20ME1E81	U-20ME1E81		PAW-560MAH2	PAW-560MAH2		
140 kW (50 HP)	U-18ME1E81	U-16ME1E81	U-16ME1E81	PAW-560MAH2	PAW-560MAH2	PAW-280MAH2	
168 kW (60 HP)	U-20ME1E81	U-20ME1E81	U-20ME1E81	PAW-560MAH2	PAW-560MAH2	PAW-560MAH2	
56 kW (20 HP)	U-20GE2E5			PAW-560MAH2			





Optional
Timer remote controller
CZ-RTC2

PAW-160MAH2 // PAW-280MAH2 // PAW-560MAH2

Technical focus

- Maximum capacity: 60HP (168 kW)
- Maximum piping length: 100 m (120 m equivalent)
- Elevation difference (O_U~I_U): 50 m (O_U above)
- Elevation difference (I_U~I_U): 4 m
- In/Out capacity ratio: 50~100%
  Maximum I_U number: 3 units*
- Outdoor temperature range in Heating: -20 - 15°C
- Available temperature range for the suction air at AHU Kit:
  Cool: 18 - 32°C / Heat: 16 - 30°C

* To be simultaneous operation controlled by one remote controller sensor.

- The systems is controlled by the suction air (or room return air) temperature (same as standard indoor unit). (Selectable mode: Automatic / Cooling / Heating / Fan / Dry (but same as Cool)
- The discharge air temperature is also controlled to prevent too-low air discharge in cooling or too-high air discharge in heating (in case of VRF)
- Demand control (Forcible thermostat-OFF control by operating current)
- Defrost operation signal, Thermo-ON/OFF states output
- Drain pump control (Drain-pump and the float switch to be supplied in local)
- External target temperature setting via Indoor/Outdoor signal interface is available with CZ-CAPBC2 (Ex. 0 – 10 V)
- Demand control 40% to 120% (5% steps) by 0-10V input signal
- Connectable with P-LINK system. Special care for electrical noise may be necessary depending on the on-side system
- Fan control signal from the PCB can be used for control the air volume (High/Mid/Low and LL for Th-OFF). Need to change the fan control circuit wiring at field

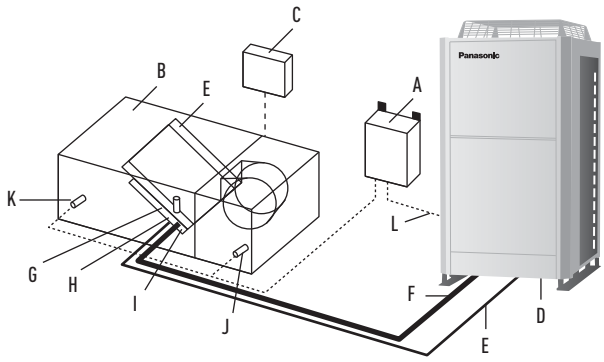

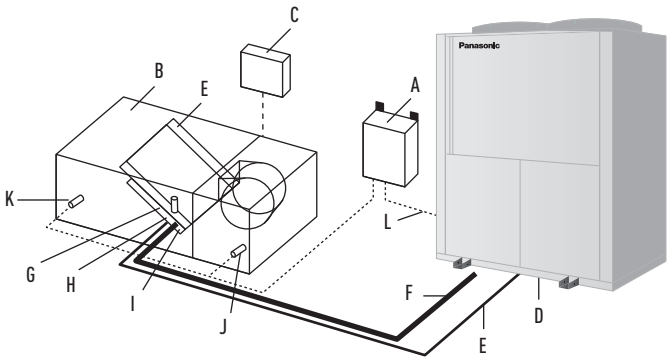

System & regulations. System overview
A: AHU Kit controller box (with control PCB)
B: AHU Kit equipment (Field supplied)
C: AHU Kit system controller (Field supplied)
D: Outdoor unit
E: Gas piping (Field supplied)
F: Liquid piping (Field supplied)
G: Electronic expansion valve
H: Thermistor for Gas pipe
I: Thermistor for Liquid pipe
J: Thermistor for Suction air
K: Thermistor for Discharge air
L: Inter-unit wiring





Air Curtain with DX Coil, connected to the VRF or PACi Systems

The Panasonic range of air curtains is designed for smooth operation and efficient performance. Air curtains produce a continuous stream of air blown from the top to the bottom of an open doorway and create a barrier that people and products can flow across, but air can't. Designed to improve energy efficiency, minimise heat loss from a building, and to allow retailers to keep doors open to encourage customers, our Air Curtains are suitable for connection to both VRF and PACi Systems.

- Super-efficient with new EC fan motor (40% lower running costs compared to a standard AC fan motor)
- Easy Cleaning and Servicing
- Can be connected to either Panasonic VRF or PACi systems
- Built-in drain for cooling operation
- Standard and Jet Flow air curtains can be controlled via Panasonic's range of remote internet controls

The new standard and jet-flow models are ideal for connection to a ECOi or PACi system. With simple 'plug and play' installation, both are fitted with an EC fan motor for a smooth operation and efficient performance. This new fan guarantees 40% lower running cost than with a standard AC fan motor. With air curtains often running for 12 hours a day as a minimum, this can lead to considerable savings.

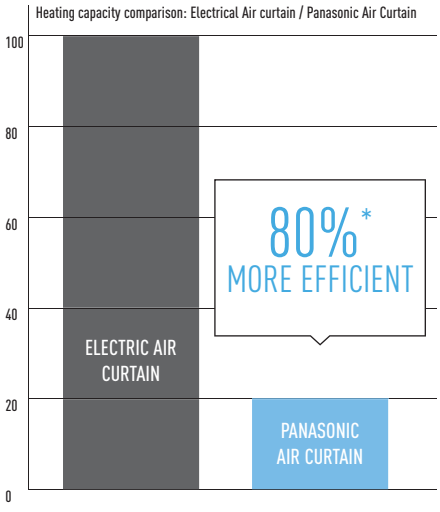

* With the U-100PE1E5 on the PAW-20PAIRC-MS.
Calculation method: Taking as consideration SCOP of the Panasonic combination of 6.0. If 100 is the energy needed for a air curtain, Panasonic Air curtain will need 1/(1-6)*100=20.

Highly efficient heating effect

The combined air stream, which has a desirable low air current induction factor (mixing factor), can carry the selected initial temperature effect over long distances, and will reach the floor area while still at room temperature. This is necessary to avoid cooling down the interior spaces.
Available in different lengths to suit requirements between 1 and 2,5m, both air curtains have outlet grilles that can be adjusted to five different positions. The jet flow model can be installed up to a height of 3,5m with the standard model up to 3,0m. The outlet grilles can be easily adjusted into five positions to suit different installations requirements and the air filter can be accessed without the need for specialist tools.

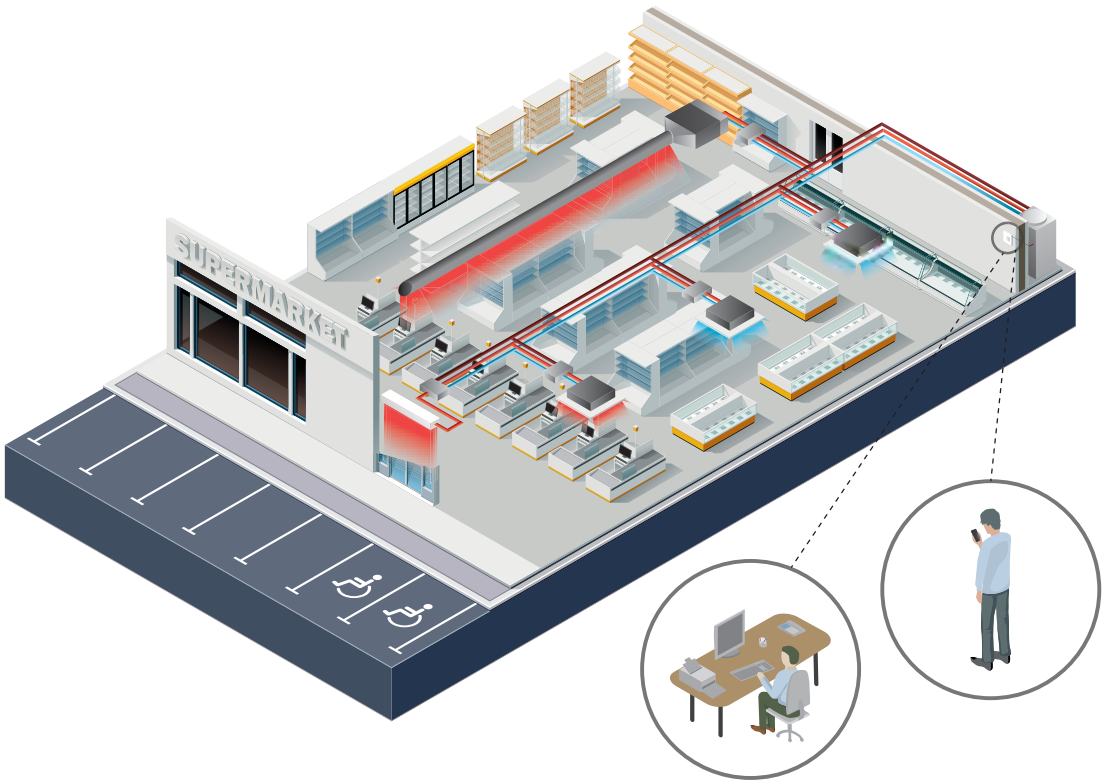

Intelligent Operation

Our air curtains combine air flow and heating / cooling technology to ensure optimum comfort and energy efficiency whilst also creating an effective barrier between indoor and outdoor environments. Design and installation is key to achieving the correct height / temperature settings to achieve optimum performance. Our air curtains are designed to answer the demands of the retail, commercial and industrial markets.

Internet Control

An app added to your tablet or smartphone or via the Internet allows you to control and manage the system remotely. There is also the option to integrate into existing BMS systems by using other Panasonic interfaces.

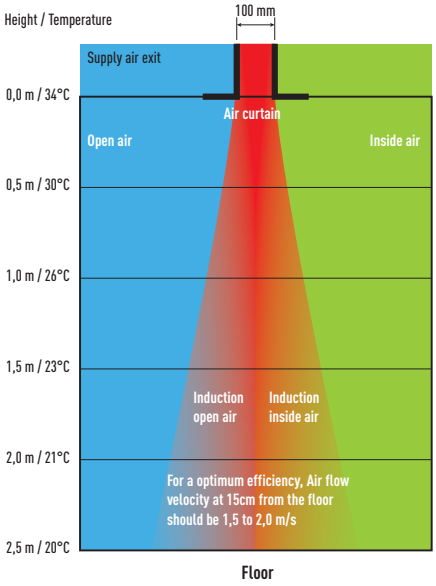

How does it work?

Stale air from the room is taken in and ejected near the door. This creates a 'roll of air' that shields the door area, mixing with the colder incoming air. It then turns away from the door, back into the room and toward the intake screen, where it is partly drawn in again. This flow of air helps to create a barrier for heat loss yet at the same time refreshes room air.

Optimised air flow velocity

1. Energy losses, no air curtain installed
2. Too low velocity air curtain – Air Curtain not efficient
3. Optimum results with the Tekadoor Air Curtain connected to Panasonic VRF
4. Too high velocity air curtain – considerable turbulence, energy lost to the outside, Air Curtain not efficient

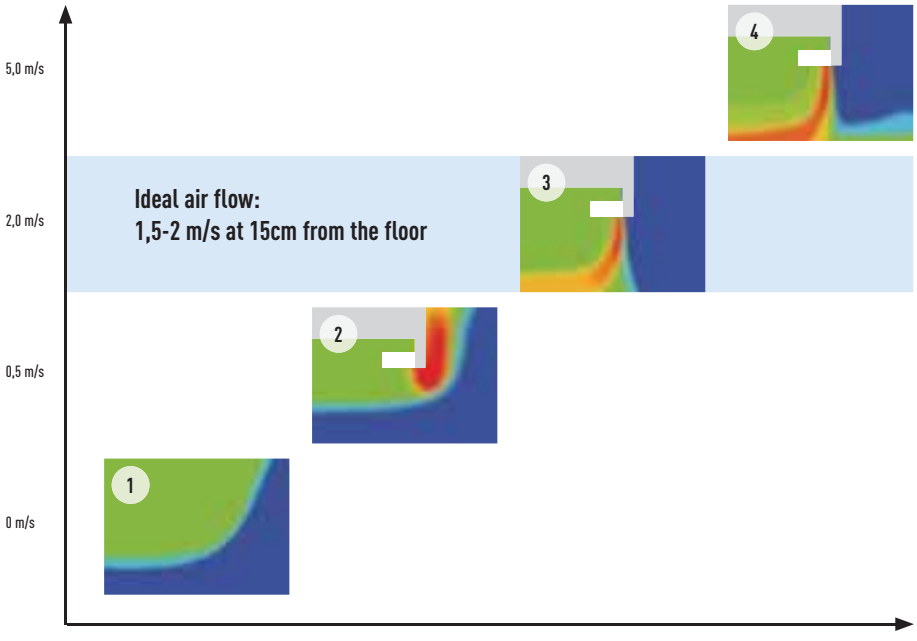

AIR CURTAIN WITH DX COIL

High efficiency Air curtain connected to your VRF installation. EC Fan motor for a smooth operation and efficient performance.
2 types of Air flow available: Jet-Flow and Standard.
2015 Fan Standard available today.
Easy Cleaning and Servicing.

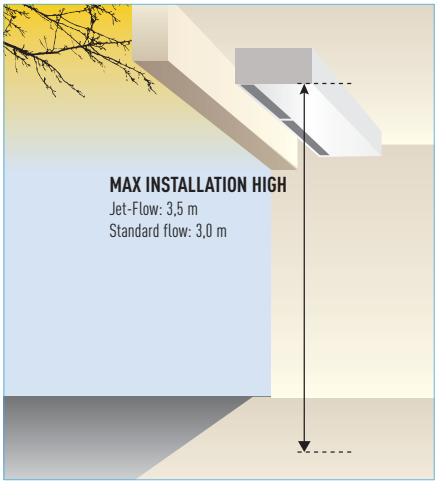

Easy control by BMS
CONNECTIVITY

HP			4 HP	8 HP	10 HP	14 HP	4 HP	10 HP
Air Curtain			PAW-10EAIRC-MJ	PAW-15EAIRC-MJ	PAW-20EAIRC-MJ	PAW-25EAIRC-MJ	PAW-10EAIRC-MS	PAW-20EAIRC-MS
Air flow type			Jet-flow				Standard	
Air Flow Length (A)		m	1,0	1,5	2,0	2,5	1,0	2,0
Air volume	High	m^3/h	1.800	2.700	3.600	4.500	1.800	2.700
	Medium	m^3/h	1.500	2.300	3.000	3.800	1.500	2.300
	Low	m^3/h	1.200	1.900	2.500	3.100	1.200	1.900
Cooling capacity nominal[2]		kW	9,2	17,5	23,1	24,4	9,2	17,5
Heating capacity nominal		kW	11,4	25,0	31,5	31,5	11,4	31,5
Heating capacity with air in 20°C, air out 40°C		kW	11,9	17,9	23,9	29,9	11,9	17,9
Heating capacity with air in 20°C, air out 35°C		kW	8,9	13,4	17,9	22,4	8,9	13,4
Heating capacity with air in 20°C, air out 30°C		kW	5,9	8,9	11,9	14,9	5,9	8,9
Max installation height	Good condition	m	3,5	3,5	3,5	3,5	3	3
	Normal condition	m	3,1	3,1	3,1	3,1	2,7	2,7
	Bad condition	m	2,7	2,7	2,7	2,7	2,4	2,4
Refrigerant			R410A	R410A	R410A	R410A	R410A	R410A
Hot gas temperature		°C	70	70	70	70	70	70
Condensing temperature		°C	50	50	50	50	50	50
Subcooling		K	5	5	5	5	5	5
Pressure		bar	45	45	45	45	45	45
Liquid pipe		Inch (mm)	3/8 (9,52)	3/8 (9,52)	3/8 (9,52)	3/8 (9,52)	3/8 (9,52)	3/8 (9,52)
Gas pipe		Inch (mm)	5/8 (15,88)	3/4 (19,05)	7/8 (22,22)	7/8 (22,22)	5/8 (15,88)	7/8 (22,22)
Fan			230V / 50Hz / 1 / N / PE	230V / 50Hz / 1 / N / PE	230V / 50Hz / 1 / N / PE	230V / 50Hz / 1 / N / PE	230V / 50Hz / 1 / N / PE	230V / 50Hz / 1 / N / PE
Fan type			EC	EC	EC	EC	EC	EC
Currency	High	A	2,1	2,8	4,2	4,9	2,1	4,2
	Med	A	0,8	1,1	1,6	1,9	0,8	1,6
	Low	A	0,3	0,4	0,6	0,7	0,3	0,6
Electrical Consumption	High	kW	0,44	0,59	0,89	1,03	0,44	0,89
	Med	kW	0,17	0,23	0,34	0,4	0,17	0,34
	Low	kW	0,06	0,08	0,12	0,14	0,06	0,12
Protecting Fuse		A	M16A	M16A	M16A	M16A	M16A	M16A
Noise		dB(A)	40-55	40-56	40-57	40-58	40-55	40-57
Dimensions	W x H x D	mm	1.210 x 260 x 590	1.710 x 260 x 590	2.210 x 260 x 590	2.710 x 260 x 590	1.210 x 260 x 490	2.210 x 260 x 490
Weight		kg	70	100	138	160	60	128

Mini ECOi with air out 40°C	U-4LE1E5/8[1]	U-6LE1E5/8[1]	–	–	U-4LE1E5/8[1]	U-6LE1E5/8[1]
Mini ECOi with air out 35°C	U-4LE1E5/8[1]	U-4LE1E5/8[1]	U-6LE1E5/8[1]	–	U-4LE1E5/8[1]	U-4LE1E5/8[1]
Mini ECOi with air out 30°C	U-4LE1E5/8[1]	U-4LE1E5/8[1]	U-4LE1E5/8[1]	U-5LE1E5/8[1]	U-4LE1E5/8[1]	U-4LE1E5/8[1]
ECOi with air out 40°C	All models	All models	All models	All models without 8HP	All models	All models
ECOi with air out 30°C or 35°C	All models	All models	All models	All models	All models	All models
GHP all temperatures	All models	All models	All models	All models	All models	All models

1) or bigger size.
All combinations under rated conditions: Heating Outdoor +7°C DB/+6°C WB Indoor +20°C DB. In case of lower outdoor temperatures a higher capacity outdoor unit model may be necessary.
2) Rated Conditions Cooling Outdoor +35°C DB Indoor +27°C DB/+19°C WB, Discharge temperature [3] 16°C.

TEKADOOR®

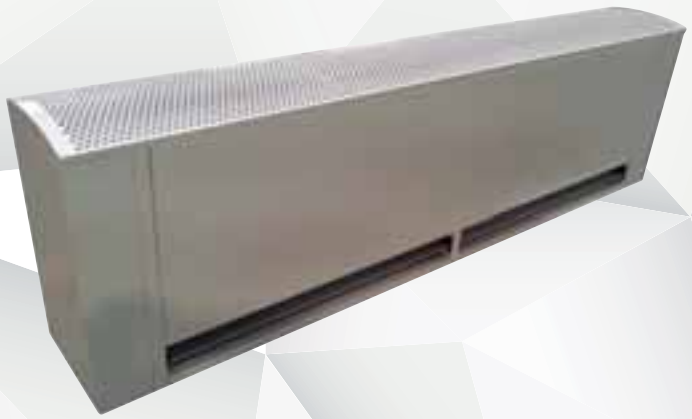

JET-FLOW: PAW-10EAIRC-MJ // PAW-15EAIRC-MJ // PAW-20EAIRC-MJ // PAW-25EAIRC-MJ

STANDARD: PAW-10EAIRC-MS // PAW-20EAIRC-MS

Technical focus

- Save up to 40% Energy Costs by use of the integrated EC Fan Technology (Higher efficiency than conventional AC fan, softstart and longer motor duration)
- 3 Lengths of Air Curtains Jet-Flow, from 1.0 to 2.0 m and 2 lengths of Air Curtains Standard, 1.0 and 2.0 m
- Installation Height up to 3,5 m (Jet-Flow) and 3,0 m (Standard)
- Outlet Grilles can be adjusted in five positions, to suite different Indoor and installation requirements (Jet-Flow)
- Control with Panasonic Remote Control systems (optional)
- Direct integration to BMS by optional Panasonic Interfaces
- Drain included for cooling operation

Features

COMFORT
- Easy redirection of Air-Flow by means of manual deflector (Jet-Flow)

EASE OF USE
- Speed selector (high and low) on the unit itself

EASY INSTALLATION AND MAINTENANCE
- Easy installation
- Compact dimensions improve installation and positinioning (Jet-Flow)
- Easy cleaning of grid without opening of the unit

JET-FLOW DIMENSIONS

TOP VIEW

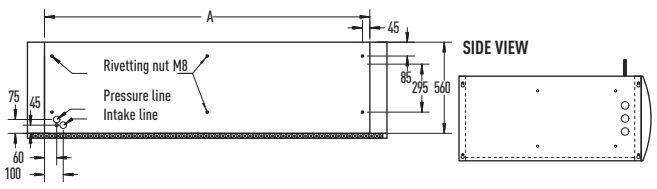

FRONT VIEW

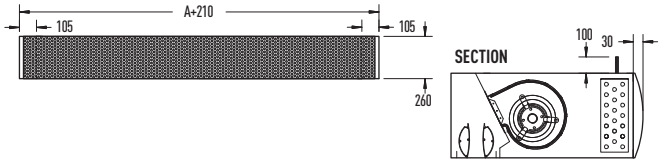

BOTTOM VIEW

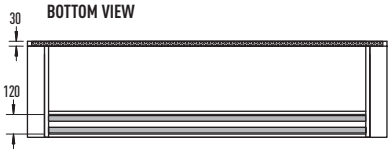

	PAW-10PAIRC-MJ	PAW-15PAIRC-MJ	PAW-20PAIRC-MJ	PAW-25EAIRC-MJ
A	1.000	1.500	2.000	2.500

STANDARD DIMENSIONS

TOP VIEW

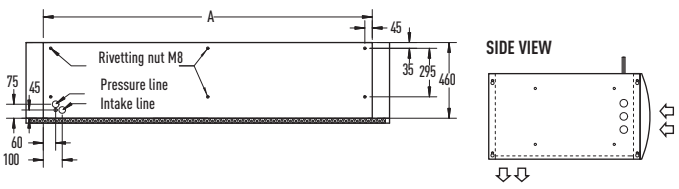

FRONT VIEW

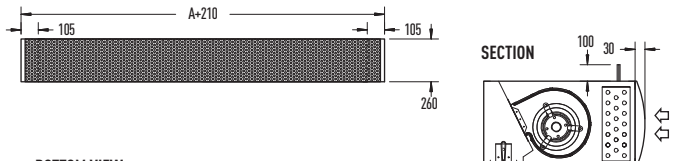

BOTTOM VIEW

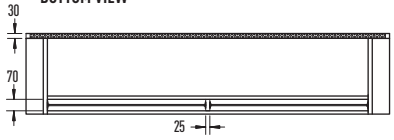

	PAW-10PAIRC-MS	PAW-20PAIRC-MS
A	1.000	2.000





Energy Recovery Ventilator

Suppresses indoor temperature changes while providing fresh air

Energy efficiency and ecology

Energy consumption is dramatically reduced by using a counter-flow heat-exchange element. Air conditioning load is reduced by approximately 20%, resulting in significant energy savings.

HEAT EXCHANGER CHARACTERISTICS

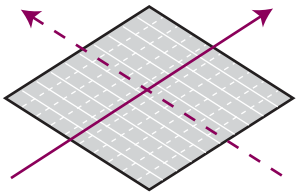

Former (cross-flow element)

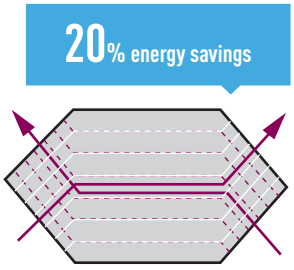

New (counter-flow element)

Heat exchange ventilation and normal ventilation

Heat exchange ventilation

When a room is cooled or heated, the exhausted cooling / heating energy is recovered by heat-exchange ventilation.

Normal ventilation

This is used in the spring and autumn, when rooms are not cooled or heated, that is, when there is little difference between the indoor and outdoor air conditions. In addition, at night during the hot season, when the outside air temperature drops the outside air is drawn inside without heat exchange, alleviating the load on the air conditioning equipment.
The heat exchanger is made up of a membrane manufactured from a special material covered in resin for optimal heat transmission. The nylon/polyester fibre filter offers high dust retention capacity. We have also redesigned the air ducts to obtain a long-lasting heat exchange system which does not need periodic cleaning.

ADOPTS A HIGHLY EFFICIENT COUNTER-FLOW HEAT EXCHANGE ELEMENT

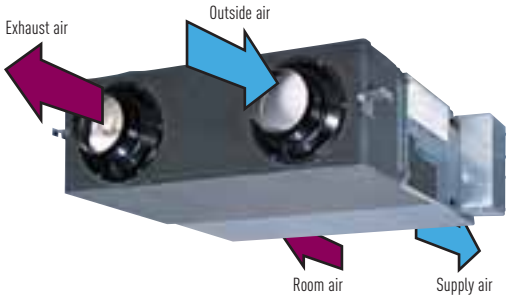

Heat exchanger

With the cross-flow element, air moves in a straight line across the element. With the counter-flow element, air flows through the element for a longer time (longer distance), so the heat-exchange effect remains unchanged even if the element is made thinner.

More Comfort

Quiet operation

Low noise operation results in noticeably quieter units. All models with capacities below 500 m^3/h run at noise levels below 32 dB (High setting) and even our largest 1,000 m^3/h-capacity model runs at only 37.5 dB (High setting).

Long heat-exchange element service life

Cleaning reduced due to the special material heat exchanger.
The nylon/polyester fibre filter offers high dust retention capacity.

CHANGES IN AIRFLOW RESISTANCE BASED ON NUMBER OF YEARS IN SERVICE

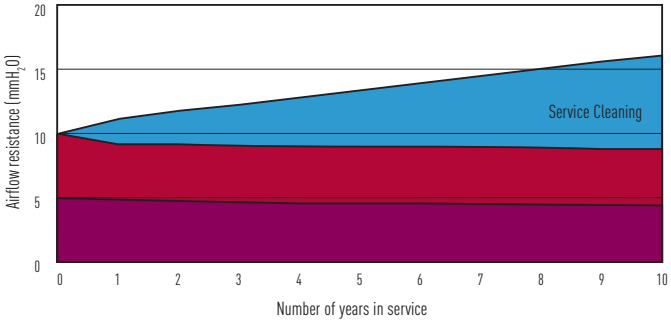

Former element before cleaning
Former element after cleaning
New element

Former element requires periodic cleaning. The counter-flow type element requires no periodic cleaning because it produces practically no increase in resistance.

Easy Installation and Maintenance

Slim shape and easier installation

Counter-flow heat exchange element used for reduced noise and slimmer, more compact body shape.
270mm Height: FY-25OZDY8 // FY-35OZDY8 // FY-50OZDY8
388mm Height: FY-65OZDY8 // FY-80OZDY8 // FY-01KZDY8A

Reverse mountable direct air supply / exhaust system

Adoption of straight air supply / exhaust system: Duct design is simplified because the air supply / exhaust ducts are straight.
Since each unit can be mounted in reverse position, only one inspection hole is needed for two units: Two units can share one inspection hole so duct work is easier and more flexible.

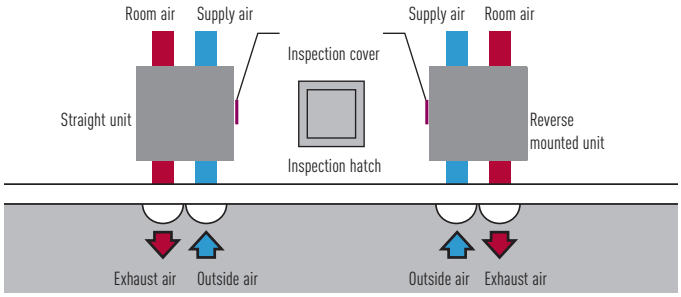

Balanced Ventilation

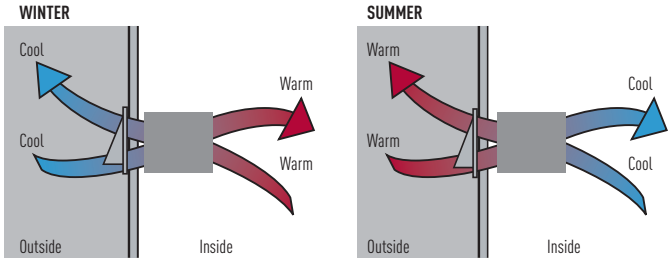

ENERGY RECOVERY VENTILATION SYSTEM

Recovers up to 77% of the heat in the outgoing air, for an ecological and energy efficient building.


FY-250ZDY8


FY-350ZDY8


FY-500ZDY8


FY-650ZDY8


FY-800ZDY8


FY-01KZDY8A

Rated flow rate		250 m³/h			350 m³/h			500 m³/h			650 m³/h			800 m³/h			1000 m³/h		
Models		FY-250ZDY8			FY-350ZDY8			FY-500ZDY8			FY-650ZDY8			FY-800ZDY8			FY-01KZDY8A		
Power Source		220-240 V - 50 Hz			220-240 V - 50 Hz			220-240 V - 50 Hz			220-240 V - 50 Hz			220-240 V - 50 Hz			220-240 V - 50 Hz		
Heat Exchange Ventilation		**E-High**	**High**	**Low**	**E-High**	**High**	**Low**	**E-High**	**High**	**Low**	**E-High**	**High**	**Low**	**E-High**	**High**	**Low**	**E-High**	**High**	**Low**
Input	W	112-128	108-123	87-96	182-190	178-185	175-168	263-289	204-225	165-185	326-347	269-295	200-210	387-418	360-378	293-295	437-464	416-432	301-311
Air Volume	m³/h	250	250	190	350	350	240	500	500	440	650	650	460	800	800	630	1.000	1.000	700
External Static Pressure	Pa	105	95	45	140	60	45	120	60	35	65	40	40	140	110	55	105	80	75
Noise	dB	30,0-31,5	29,5-30,5	23,5-26,5	32,5-33,0	30,5-31,0	22,5-25,5	36,5-37,5	34,5-35,5	31,0-32,5	36,5-37,5	34,5-35,5	30,0-32,0	37,0-37,5	36,5-37,0	33,5-34,5	37,5-38,5	37,0-37,5	33,5-34,5
Temp. Exchange Effiency	%	75	75	77	75	75	78	75	75	76	75	75	79	75	75	76	75	75	79
Normal Ventilation		**E-High**	**High**	**Low**	**E-High**	**High**	**Low**	**E-High**	**High**	**Low**	**E-High**	**High**	**Low**	**E-High**	**High**	**Low**	**E-High**	**High**	**Low**
Input	W	112-128	108-123	87-96	182-190	178-185	175-168	263-289	204-225	165-185	326-347	269-295	200-210	387-418	360-378	293-295	437-464	416-432	301-311
Air Volume	m³/h	250	250	190	350	350	240	500	500	440	650	650	460	800	800	630	1000	1000	700
External Static Pressure	Pa	105	95	45	140	60	45	120	60	35	65	40	40	140	110	55	105	80	75
Noise	dB	30,0-31,5	29,5-30,5	23,5-26,5	32,5-33,0	30,5-31,0	22,5-25,5	37,5-38,5	37,0-38,0	31,0-32,5	36,5-37,5	35,0-35,5	30,0-32,0	37,0-37,5	36,5-37,0	33,5-34,5	39,5-40,5	39,0-39,5	35,5-36,5
Temp. Exchange Effiency	%	-	-	-	-	-	-	-	-	-	-	-	-	-	-	-	-	-	-
Dimensions (W x D x H)	mm	882 x 599 x 270			1.050 x 804 x 317			1.090 x 904 x 317			1.204 x 884 x 388			1.322 x 884 x 388			1.322 x 1134 x 388		
Weight	kg	29			49			57			68			71			83		

This noise of the product is the value which was measured at the acoustic room. Actually, in the established condition, that undergo influence by the echoing of the room and so that become bigger than the display numerical value. The input, the current and the exchange efficiency are values at the time of the mentioned air volume. The noise level shall be measured 1,5m below the centre of the unit. The temperature exchange efficiency averages that of when cooling and when heating.

TYPICAL SYSTEM LINKED TO A CASSETTE TYPE AIR CONDITIONER

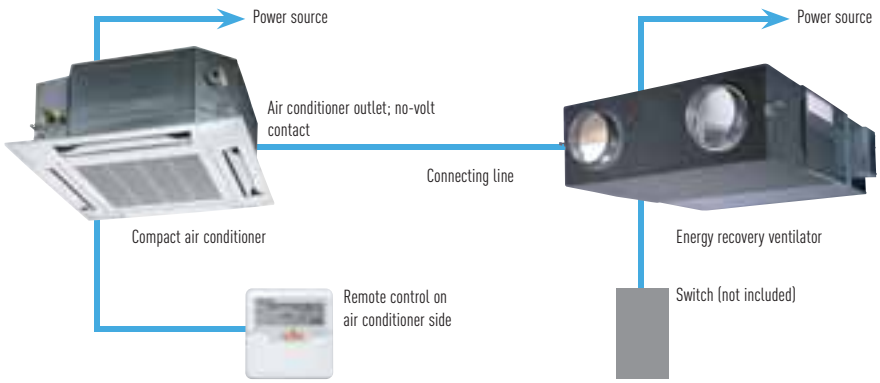

Use conditions

Outdoor air conditions
Temperature range: -10°C – 40°C
Relative humidity: 85% or less

Indoor air conditions
Temperature range: -10°C – 40°C
Relative humidity: 85% or less

Requirements for installation
Use is to be avoided in refrigerated chambers or other places where the temperature may undergo significant fluctuations, even when the temperature range is acceptable.

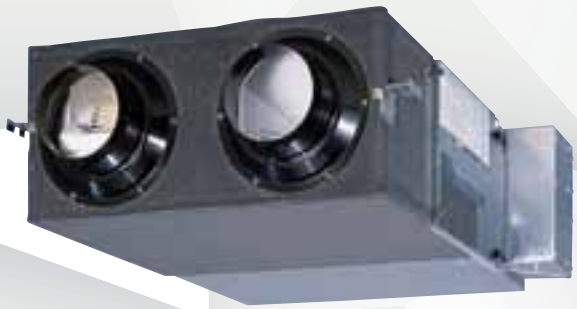

FY-250ZDY8 // FY-350ZDY8 // FY-500ZDY8 // FY-650ZDY8 // FY-800ZDY8 // FY-01KZDY8A

Technical focus

- High energy saving, up to 20%
- Counter Cross Flow technology for better efficiency
- Long life element core
- Easy installation and 20% less thickness
- Easy connection to air conditioning units
- Super quiet units

Features

HEALTHY AIR
- The filter guarantees healthier air

ENERGY EFFICIENCY AND ECOLOGY
- Up to 20% energy saving in the installation
- Recovers up to 77% of the heat in the outgoing air

COMFORT
- Cleaning reduced due to the revolutionary structure of the exchanger (recommended every 6 months)
- Ideal for indoor spaces without windows

EASY INSTALLATION AND MAINTENANCE
- 6 models for easier selection
- Reduced system height (270mm and 388mm)
- Side opening for cleaning (inspection of filter, motor and other parts)
- Installation can be reversed to share an inspection opening between 2 machines
- Easy connection to the air conditioning unit (without additional elements)
- Installation in false ceilings
- Units operate at 220 - 240 V
- High static pressure for easier installation

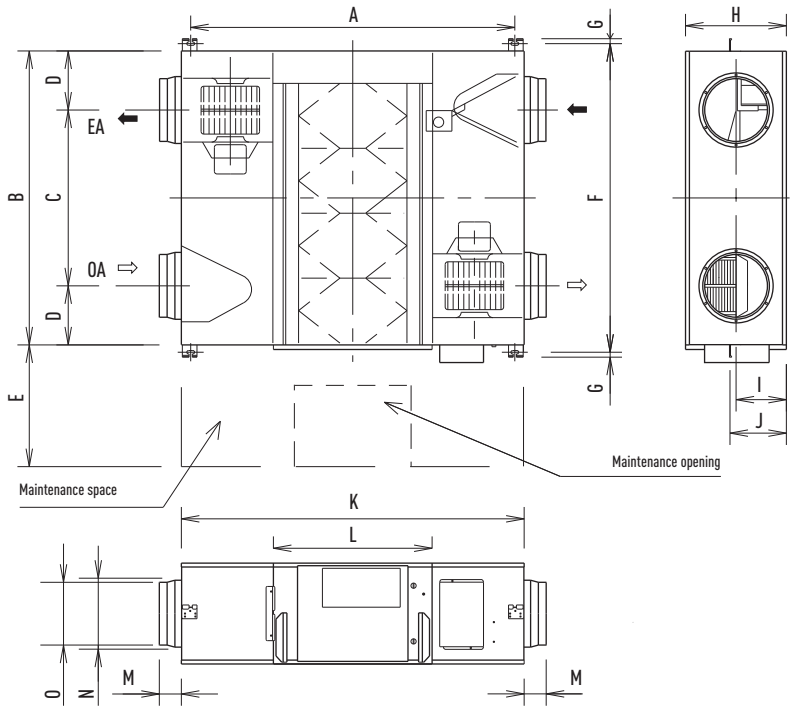

	FY-250ZDY8	FY-350ZDY8	FY-500ZDY8	FY-650ZDY8	FY-800ZDY8	FY-01KZDY8A
A	810	810	890	1.132	1.250	1.250
B	599	804	904	884	884	1.134
C	315	480	500	620	428	678
D	142	162	202	132	228	228
E	600	600	600	600	600	600
F	655	860	960	940	940	1.190
G	19	19	19	19	19	19
H	270	317	317	388	288	388
I	135	145	145	194	194	194
J	159	159	159	218	218	218
K	882	882	962	1.204	1.322	1.322
L	414	414	414	560	612	612
M	95	95	107	70	85	85
N	219	219	246	210	258	258
O	144	144	194	194	242	242



Operation System	Individual Control Systems						
Requirements	Control for hotel application (for VRF)		Wired remote controller		Wireless remote controller	Quick and easy operation	
External appearance	 NEW			 NEW			
Type, model name	Intelligent Controller		Normal operation	Design wired remote controller	Wireless remote controller	Simplified remote controller	Backlit remote controller
	PAW-RE2C3-WH PAW-RE2C3-GR PAW-RE2C3-MOD-WH PAW-RE2C3-MOD-GR PAW-RE2C3-LON-WH PAW-RE2C3-LON-GR	Stand-Alone White Stand-Alone Grey Modbus White Modbus Grey LonWorks White LonWorks Grey	CZ-RTC2	CZ-RTC3 ECONAVI	CZ-RWSU2 // CZ-RWSY2 // CZ-RWSL2 // CZ-RWSC3 // CZ-RWST2 // CZ-RWST3 // CZ-RWSK2	CZ-RE2C2	CZ-RELC2
Econavi Control	–			✔	–	–	
Power consumption monitor	–			✔[2]	–	–	
Built-in Thermostat	✔			✔	✔	✔	
I_O which can be controlled	1 indoor unit			1 group, 8 units	1 group, 8 units	1 group, 8 units	
Use limitations	–			• Up to 2 controllers can be connected per group	• Up to 2 controllers can be connected per group	• CZ-RE2C2: up to 2 controllers can be connected per group • CZ-RELC2: can not operate other (SUB) remo-con	
Function ON/OFF	✔			✔	✔	✔	
Mode setting	AUTO			✔	✔	✔	
Fan speed setting	✔			✔	✔	✔	
Temperature setting	✔			✔	✔	✔	
Air flow direction	–			✔	✔[1]	✔[1]	
Permit/Prohibit switching	✔			–	–	–	
Weekly program	–			✔	–	–	

1. Setting is not possible when a remote control unit is present (use the remote control for setting). 2) Only for PACi Elite except 50 type. * All specifications subject to change without notice.

Control systems for ECOi, ECO G and PACi

A wide variety of control options to meet the requirements of different applications.

	Timer Operation	**Centralized Control Systems**				
	Daily and weekly program	Operation with various function from center station	Only ON/OFF operation from center station	Simplified load distribution ratio (LDR) for each tenant	BMS System. PC Base	Connection with 3rd Party Controller
					**P-AIMS. Basic Software**  CZ-CSWKC2 **Optional software**  CZ-CSWAC2 for Load distribution. CZ-CSWWC2 for Web application. CZ-CSWGC2 for Object layout display. CZ-CSWBC2 for BAC net software interface. *PC required (field supply) **Web Interface Systems**  CZ-CWEBC2 *PC required (field supply)	**Seri-Para I/O unit for outdoor unit** CZ-CAPDC2  **Local adaptor for ON/OFF control** CZ-CAPC2  **MINI Seri-Para I/O Unit** CZ-CAPBC2  **Communication Adaptor** CZ-CFUNC2 
	Schedule timer	System controller	ON/OFF Controller	Intelligent Controller (Touch screen panel)		
	CZ-ESWC2	CZ-64ESMC2	CZ-ANC2	CZ-256ESMC2 (CZ-CFUNC2)		
	—	—	—	—		
	—	—	—	—		
	—	—	—	—		
	64 groups, maximum 64 units	64 groups, maximum 64 units	16 groups, maximum 64 units	64 units x 4 systems, max. 256 units		
	· Required power supply from the system controller · When there is no system controller, connection is possible to the T10 terminal of an indoor unit	· Up to 10 controllers, can be connected to one system · Main unit/sub unit (1 main unit + 1 sub unit) connection is possible · Use without remote controller is possible	· Up to 8 controllers (4 main units + 4 sub units) can be connected to one system · Use without remote controller is impossible	· A communication adaptor (CZ-CFUNC2) must be installed for three or more systems		
	—	✔	✔	✔		
	—	✔	—	✔		
	—	✔	—	✔		
	—	✔	—	✔		
	—	✔[1]	—	✔[1]		
	—	✔	✔	✔		
	✔	—	—	✔		





Nº1

FOR HOTEL APPLICATIONS

ALL IN ONE!

More easier to install, cheaper to integrate one only control to integrate all devices

New control for hotel application: Nice, easy and cost effective!

Panasonic has developed an innovative line up of remote controls specially designed for applications:

- Easy to install
- Cost effective installation as all electrical cable are centralized on this remote
- Architect inspired attractive design
- Direct connection to the Indoor unit with most of the functions of the indoor unit
- 3 options available: Stand-Alone, Modbus or LonWorks communication
- 2 frame colours: White and aluminium

From this remote control: The lighting, card contact, motion detector, window contact and the air conditioning are controlled.

Energy saving functions included on the device: • Turns Off air conditioning and lighting when room is unoccupied • Disables air conditioning when window is open • Maximum/ minimum setpoint temperature configurable

Easy remote control: The hotel customer will have access to limited functions to control the air conditioning:
ON/OFF, Temperature (under a certain limit fixed during the start up) and Fan speed

Easy set up: Stand-Alone model with easy configuration menu to access all parameters. The installation is simplified as all the cables should arrive to the remote control. A pre-define scenario can be uploaded on the remote control connected to a computer to make installation on site plug and play (only on the Modbus and LonWorks models).



Control to integrate all room hotel needs in one device:
Card switch. Heating and cooling control. Light control. Window control. Possible to connect to Modbus

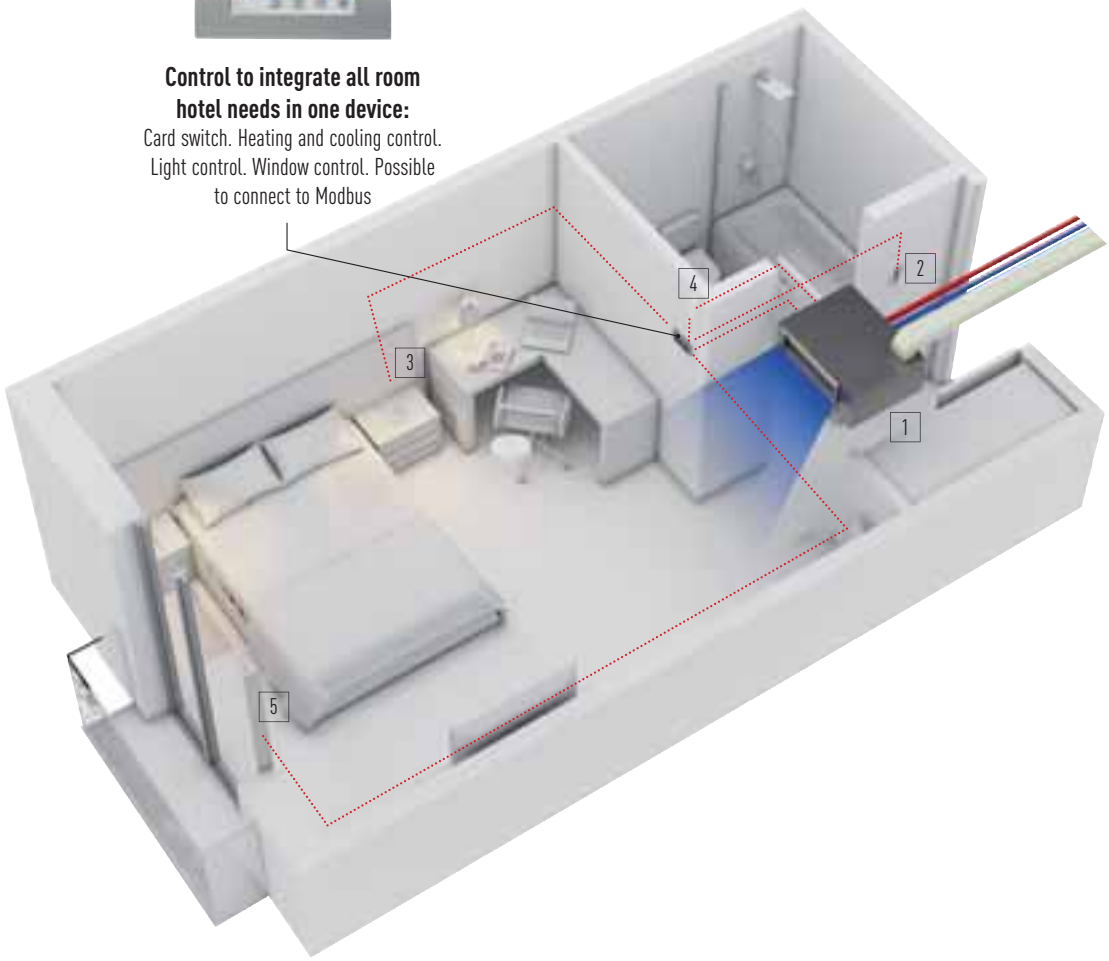



1. Indoor unit. Variable static pressure hide away

2. Room card switch*



3. Lighting control



4. Econavi sensor

5. Window contact*

* Field supply

Four preconfigured systems (option 1 to 4)

The remote control have a 4 preconfigured systems in order to easily integrate it.

4 options available I/O configurations: Inputs

Configurations	Digital	Digital	Digital	Analog
	1-2	3-4	5-6	7-8
Option 1	Card	Window	Lighting	Temperature
Option 2	Card	Window	Blinds Up	Blinds Down
Option 3	Motion Sensor	Window	Door Contact	Temperature
Option 4	Lighting	Window	Blinds Up	Blinds Down

Available I/O Configurations: Outputs

Configurations	Relay	Relay	Relay	Relay
	15-16	13-14	11-12	9-10
Option 1	Courtesy	Lighting	Not Used	Valve actuator
Option 2	Courtesy	Lighting	Blinds Up	Blinds Down
Option 3	Courtesy	Lighting	Not Used	Valve actuator
Option 4	Not used	Lighting	Blinds Up	Blinds Down

I/O Definitions: Inputs

Description	Functionality
Card	Occupancy room status. Enable HVAC Control and automatically switches ON Courtesy and Lighting outputs
Window	Temporary disables HVAC System
Lighting	Pushbutton to turn ON/OFF Lighting Output when room occup.
Temperature	Analog input for Valve Actuator output control on 2nd zone
Blinds Up	Pushbutton for Blind Up motor output control
Blinds Down	Pushbutton for Blind Down motor output control
Motion Sensor	In combination with Door Contact, enables HVAC Control and automatically switches ON Courtesy and Lighting outputs
Door Contact	In combination with Motion Sensor, enables HVAC Control and automatically switches ON Courtesy and Lighting outputs

I/O Definitions: Outputs

Description	Functionality
Courtesy	Automatically turns ON when room changes to occupied or unoccupied mode. It turns to OFF after a configurable time-out
Lighting	Automatically turns ON/OFF when room changes to occupied/unoccupied. Manual override with Lighting input
Valve Actuator	HVAC Control for a 2nd zone
Blinds Up	Output for Blind Up motor control
Blinds Down	Output for Blind Down motor control

Example I/O: Wiring configuration for Option 2

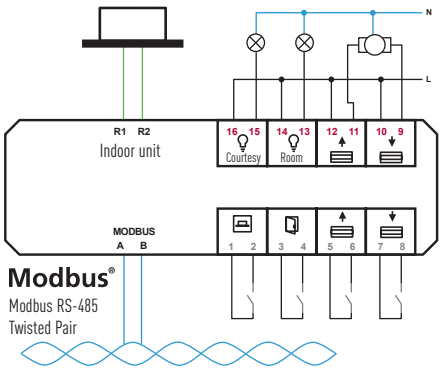

Example I/O: Option 2

Terminals	Description	Type
A, B	Modbus RS-485	Bi-directional
R1, R2	Indoor Unit	Bi-directional
1, 2	Card contact	Digital Input
3, 4	Window Contact	Digital Input
5, 6	Blinds Up	Digital Input
7, 8	Blinds Down	Analog Input
9, 10	Blinds Down	Relay Output
11, 12	Blinds Up	Relay Output
13, 14	Lighting Room	Relay Output
15, 16	Lighting Courtesy	Relay Output

Panasonic Reference

PAW-RE2C3-WH	Stand-Alone with I/O White frame
PAW-RE2C3-GR	Stand-Alone with I/O Grey Frame
PAW-RE2C3-MOD-WH	Modbus RS-485 with I/O White frame
PAW-RE2C3-MOD-GR	Modbus RS-485 with I/O Grey frame
PAW-RE2C3-LON-WH	LonWorks TP/FT-10 with I/O White frame
PAW-RE2C3-LON-GR	LonWorks TP/FT-10 with I/O Grey frame

Individual Control Systems

High-spec wired remote controller (CZ-RTC3)

NEW



- Power consumption monitor (only for PACi)
- Flat face design & Touch sensor switch for stylish design and operating usability
- New functions such as for Energy saving & monitoring and for Service use are available on the Full dot LCD (3,5" display)
- Improved illumination
- White LED backlit
- Blink when alarm occurs

BASIC OPERATION
- Operation
- Mode
- Temperature setting
- Airflow volume
- Airflow direction

TIMER FUNCTION
- Outing function
- Weekly Program timer
- Easy ON/OFF timer
- Time display

ENERGY SAVING
- Outing function
- Temperature setting range limitation
- Temperature auto return
- OFF remind
- Schedule demand control
- Energy saving mode
- Energy monitoring

OTHERS
- Key lock
- Ventilation fan control
- Display contrast adjustment
- Remote controller sensor
- Quiet operation mode
- Prohibit setting control from Central controller

* Several functions can not use on some outdoor unit. Ex. Power consumption monitor is not available for PACi Standard, Big PACi and PACi Elite 50 type.

Timer remote controller (CZ-RTC2)



- Time Function 24 hours real time clock (week day indicator)
- Weekly programme function (a maximum of 6 actions can be programmed for each day)
- Sleeping function (this function controls the room temperature for comfortable sleeping)
- Maximum 8 indoor units can be controlled from one remote controller
- Remote control by main remote controller and sub controller is possible (maximum 2 remote controllers (main remote controller and sub controller) can be installed for one indoor unit)
- Possible to connect to the outdoor unit using PAW-MRC cable for servicing purposes
- Outing function (this function can prevent the room temperature from dropping or rising when the occupants are out for a long time)

Basic remote controller ON/OFF

- Operation mode changeover (Cooling, Heating, Dry, Auto, Fan)
- Temperature setting (Cooling / Dry: 18-30°C Heating: 16-30°C)
- Fan speed setting High / Medium / Low and Auto
- Air flow direction adjustment

Dimensions (H x W x D): 120 x 120 x 16mm

Wireless remote controller



CZ-RWSU2
For 4 Way 90x90 Cassette.



CZ-RWSL2
For 2 Way Cassette.



CZ-RWSK2
For Wall Mounted and 4 Way 60x60 Cassette (with panel CZ-KPY3A).



CZ-RWST2
For 1 Way Cassette.



CZ-RWST3
For Ceiling.



CZ-RWSK2 + CZ-RWSC3
Combination for all indoor units.

- Easy installation for the 4 Way cassette type simply by replacing the corner part
- 24 hour timer function
- Remote control by main remote controller and sub controller is possible (Max. 2 remote controllers (main remote controller and sub controller) can be installed for one indoor unit)
- When CZ-RWSC3 is used, wireless control becomes possible for all indoor units (1: when a separate receiver is set up in a different room, control from that room also becomes possible. 2: automatic operation by means of the emergency operation button is possible even when the remote controller has been lost or the batteries have been exhausted)
- Operation of separate energy recovery ventilators (When commercial ventilation fans or heat-exchange ventilation fans have been installed, they can be operated with this remote control (interlocked operation with the indoor unit or independent ventilation ON/OFF)

Simplified remote controller (CZ-RE2C2)



A remote controller with simple functions and basic operation

- Suitable for open rooms or hotels where detailed functions are not required
- ON/OFF, operation mode switching, temperature setting, air speed switching, air flow direction setting, alarm display, and remote controller self-diagnosis can be performed
- Batch group control for up to 8 indoor units
- Remote control by main remote controller and sub controller is possible with a simplified remote controller or a wired remote controller (up to two units)

Dimensions (H x W x D): 120 x 70 x 16mm

Backlit remote controller (CZ-RELC2)



Backlit remote controller with simple and friendly operation

- ON/OFF, operation mode switching, temperature setting, air speed switching, air flow direction setting, alarm display can be performed. LCD backlit display
- Built-in temperature sensor and batch group control for up to 8 indoor units
- Sub remote controller can not be used

Dimensions (H x W x D): 120 x 70 x 16mm

Remote sensor (CZ-CSRC2)



- This remote sensor can be connected to any indoor unit. Please use it to detect the room temperature when no remote controller sensor or body sensor is used (connection to a system without a remote controller is possible)
- For joint use with a remote control switch, use the remote control switch as main remote controller
- Batch group control for up to 8 indoor units

Control contents		Part name, model No.	Quantity
Standard Control	· Control of the various operations of the indoor unit by wired or wireless remote controller. · Cooling or heating mode of the outdoor unit is decided by the first priority of the remote controller. · Switching between remote controller sensor and body sensor is possible.	Timer remote controller: CZ-RTC2 Wired remote controller: CZ-RE2C2 // CZ-RELC2 Wireless remote controller: CZ-RWSU2 // CZ-RWSL2 // CZ-RWSG2 // CZ-RWSK2 // CZ-RE2C2	1 unit each
(1) Group control	· Batch remote control on all indoor units. · Operation of all indoor cells in the same mode. · Up to 8 units can be connected.	Timer remote controller: CZ-RTC2 Wired remote controller: CZ-RE2C2 Wireless remote controller: CZ-RWSU2 // CZ-RWSL2 // CZ-RWSG2 // CZ-RWSK2 // CZ-RE2C2	1 unit
(2) Main/sub remote control	· Max 2 remote controllers per indoor unit. · The button pressed last has priority. · Timer setting is possible even with the sub remote controller.	Main or sub. Timer remote controller: CZ-RTC2 Wireless remote controller: CZ-RWSU2 // CZ-RWSL2 // CZ-RWSG2 // CZ-RWSK2 // CZ-RE2C2	As required

Centralised Control Systems

Schedule timer (CZ-ESWC2)



The power supply for the schedule timer is taken from one of the following.

1. Control circuit board (T10) of a nearby indoor unit (power supply wiring length: within 200 m from the indoor unit).
2. System controller (power supply wiring length: within 100 m from the indoor unit).

When the power supply for the schedule timer is taken from the control circuit board of the indoor unit, that indoor unit cannot be used with other control devices using the CZ-T10 terminal. As operation mode and temperature settings are not possible with the schedule timer, it must be used together with a remote controller, a system controller, an intelligent controller, etc. Also, as it does not have an address setting function, the control function of a system controller etc. must be used for address setting.

- Up to 64 groups (maximum 64 indoor units) can be controlled divided into 8 timer groups
- Six program operations (Operation/Stop/Local permission/Local prohibition) per day can be set in a program for one week
  - Only operation or stop, remote controller local permission or remote controller local prohibition, and their respective combinations are possible. (Operation + local permission, stop + local prohibition, only local permission, etc.)
  - Local prohibition and the combination of the three items of temperature setting, mode change, and operation/stop can be set at the time of installation.
- A function for pausing the timer in case of national holidays has been added, and timer operation also can be stopped for a long time
  - By setting holidays or operation stop within one week, the timer can be paused just for that week.
  - All timer settings can be stopped with the timer "ON/OFF effective" button. (Return to timer operation is made by pressing the button again.)

Dimensions (H x W x D): 120 x 120 x 16mm.

Connection example 1 (power supply from the indoor unit)

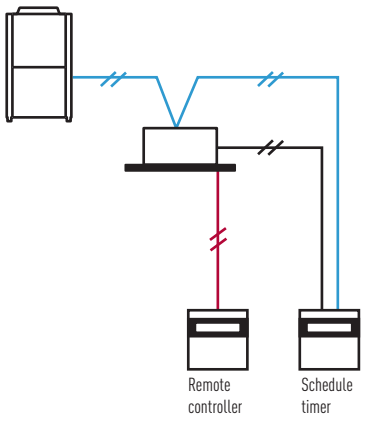

Connection example 2 (power supply from the central controller)

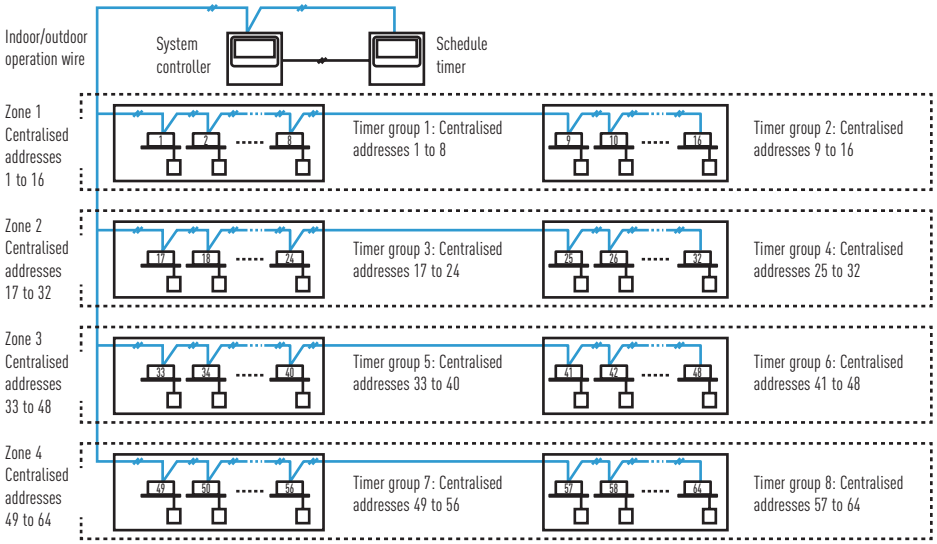

ON/OFF controller (CZ-ANC2)



- 16 groups of indoor units can be controlled.
- Collective control and individual group (unit) control can also be performed.
- Up to 8 ON/OFF controller (4 main, 4 sub) can be installed in one link system.
- The operation status can be determined immediately.

Note: As operation mode and temperature settings are not possible with the ON/OFF controller, it must be used together with a remote controller, a system controller etc.

Dimensions (H x W x D): 121 x 122 x 14 + 52mm (embedding dimension).

Power supply: AC 220 to 240 V.
I/O part: Remote input (effective voltage: within DC 24 V): All ON/OFF.
Remote output (allowable voltage: within DC 30 V): All ON, All alarm.

System controller (CZ-64ESMC2)



Individual control is possible for max. 64 groups, 64 indoor units.
Control of 64 indoor units divided into 4 zones. (One zone can have up to 16 groups, and one group can have up to 8 units.)
Control is possible for ON/OFF, operation mode, fan speed, air flow direction (only when used without a remote controller), operation monitoring, alarm monitoring, ventilation, remote controller local operation prohibition, etc.

Individual All operations are possible from the remote controller. However, the contents will be changed to the last settings used on the controller.
Central 1 The remote controller cannot be used for ON/OFF. (All other operations are possible from the remote controller.)
Central 3 The remote controller cannot be used for mode change or temperature setting change. (All other operations are possible from the remote controller.)
Central 4 The remote controller cannot be used for operation mode change. (All other operations are possible from the remote controller.)

Joint use with a remote controller, an intelligent controller, a schedule timer, etc. is possible
(The maximum number of connectable system controllers is 10, including other central controllers on the same circuit.)
(In case of joint use with a wireless remote controller, there are limitations for the control mode. Please use only with "Individual" and "Central 1".)

Control of systems without a remote controller and of main/sub systems (a total of up to 2 units) is possible

External Contacts On Central Controllers
Terminals for remote monitoring:

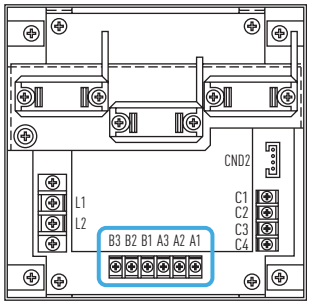

A1) Input for turning ON air conditioners concurrently
A2) Input for turning OFF air conditioners concurrently
A3) Common input for turning air conditioners ON or OFF
B1) On operation state indicator output
B2) Alarm indicator output
B3) Common indicator output

A control mode corresponding to the use condition can be selected from 10 patterns
A. Operation mode: Central control mode or remote control mode can be selected
Central control mode: The system controller is used as centralised control device. (Setting from a remote controller can be prohibited by prohibiting local operation from the system controller.)
Remote control mode: The system controller is used as a remote controller. (Setting from the system controller can be prohibited by prohibiting local operation from another central control unit.)
B. Controlled unit number mode: All mode or zone 1, 2, 3, 4 mode can be selected
All mode: All, zone, or group unit can be selected.
Zone 1, 2, 3, 4 mode: Setting is possible only for the indoor units of zone 1, 2, 3, or 4.

Connection example

		A Operation mode	
		Central control mode	**Remote control mode**
B Controlled unit number mode	All mode	All central control. Example 1	All remote control
	Zone 1 mode	Zone 1 central control. Example 2	Zone 1 remote control
	Zone 2 mode	Zone 2 central control	Zone 2 remote control. Example 3
	Zone 3 mode	Zone 3 central control. Example 4	Zone 3 remote control
	Zone 4 mode	Zone 4 central control	Zone 4 remote control. Example 5

Dimensions (H x W x D): 120 x 120 x 21 + 69mm (embedding dimension).
Power supply: AC 220 to 240 V.
I/O part: Remote input (effective voltage: DC 24 V): All ON/All OFF
Remote output (voltage-free contact): All ON/All OFF (external Power supply within DC 30 V, maximum 1 A).
Total wiring length: 1 km.

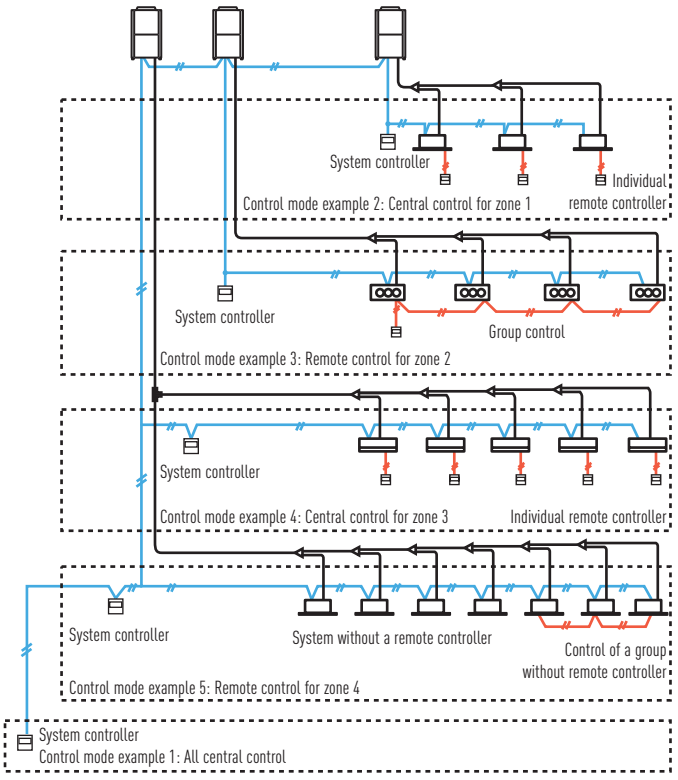

Centralised Control Systems

Intelligent controller (CZ-256ESMC2)



Web application



System Configuration Example

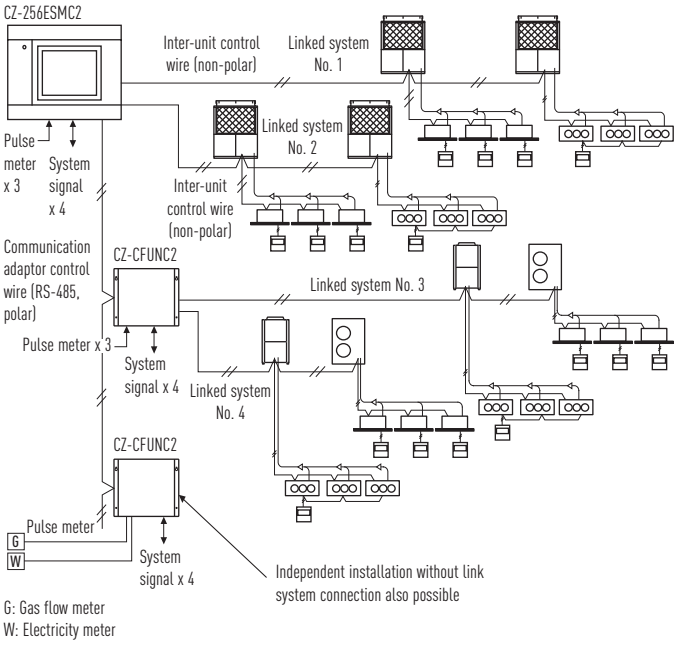

G: Gas flow meter
W: Electricity meter

Maximum number of connections	Indoor units: 256 (64/link x 4)
	Outdoor units: 120 (30/link x 4)
	Communication adaptors: 7
	Link systems (Inter-unit control wires): 4

Limitation contents for prohibited operation

Prohibition means limiting the operations possible from the remote controller. It is also possible to change the prohibition items.

Limitation contents (Limitations can be user defined)

Individual — No limits are set for the remote controller operation. However, the contents will be changed to the controller's last settings. (Last-pressed priority.)

Prohibition 1 — The remote controller cannot be used for ON/OFF. (All other operations are possible from the remote controller.)

Prohibition 2 — The remote controller cannot be used for ON/OFF, operation mode change and temperature setting. (All other operations are possible from the remote controller.)

Prohibition 3 — The remote controller cannot be used for operation mode change and temperature setting. (All other operations are possible from the remote controller.)

Prohibition 4 — The remote controller cannot be used for operation mode change. (All other operations are possible from the remote controller.)

Note: Avoid joint use of the AMY system and the intelligent controller on the same indoor/ outdoor operation line.

- Max. 256 indoor units (4 systems x 64 units) can be controlled. In case of three or more systems, a communication adaptor CZ-CFUNC2 must be installed on the outside
- Operation is possible as batch, in zone units, in tenant and in group units
- ON/OFF, operation mode setting, temperature setting, fan speed setting, air flow direction setting (when used without a remote controller), and remote controller local operation prohibition (prohibition 1, 2, 3, 4)
- A system without a remote controller is possible. Joint use with a remote controller or a system controller is also possible
- Use of a schedule timer and holiday setting also can be done
- Proportional distribution of the air conditioning energy is possible. Including CSV-file export via CF-card (supplementary accessory)
- Pulse signal input from electric/gas consumption meter

In case of joint use with a wireless remote control system, there are limitations for the control mode. Please use only with "Permission" and "Prohibition 1".

Dimensions (H x W x D): 240 x 280 x 138mm.
Power supply: AC 100 to 240 V (50 Hz), 30 W (separate power supply).
I/O part: Remote in put (voltage-free contact): All ON/OFF.
Remote output (voltage-free contact): All ON, All alarm (external power supply within DC 30 V, 0.5 A).
Total wiring length: 1 km for each system.
Only for embedding in the panel.

CZ-CBPCC2: Additional back up memory for CZ-256ESMC2.

Web Interface (CZ-CWEBC2)

Functions



(HxWxD): 248x185x80mm
AC 100 to 240 V (50/60Hz), 17 W
(separate power supply)

- Access and operation by Web browser.
- Icon display.
- Language codes available in English, French, German, Italian, Portguese, Spanish.
- Individual control possible (max. 64 indoor units) ON/OFF operation mode, set temperature, fan speed, Flap set, timer ON/OFF alarm code monitoring, prohibit Remote Control.
- Zone control*.
- All Units control.
- Alarm Log.
- Mail Sent Log.
- Program Timer set 50 daily timers with 50 actions each day, 50 weekly timers 50 weekly timers, 1 holiday timer, 5 special day timers, for each tenant
- Prohibit Remote Control settings.
- IP ADDRESS could be changed via Internet.

Note: It is recommended to install a remote controller or a system controller on site to enable local control if it network experience a problem.

Easy to set to every room by recognizable icon and user-friendly remote control window

- If any of the indoor units is selected, the remote control window shown will be displayed for detailed setting modifications.

Easy to manage and monitor each tenant use*

- Each floor or tenant, otherwise each zone can be displayed and controlled.
- All unit statuses can also be displayed on one screen.

Program Timer set

- 50 daily timers with 50 actions each day, 50 weekly timers, holiday timer, 5 special day timers, for each tenant.

* Web interface system not applicable for load distribution.

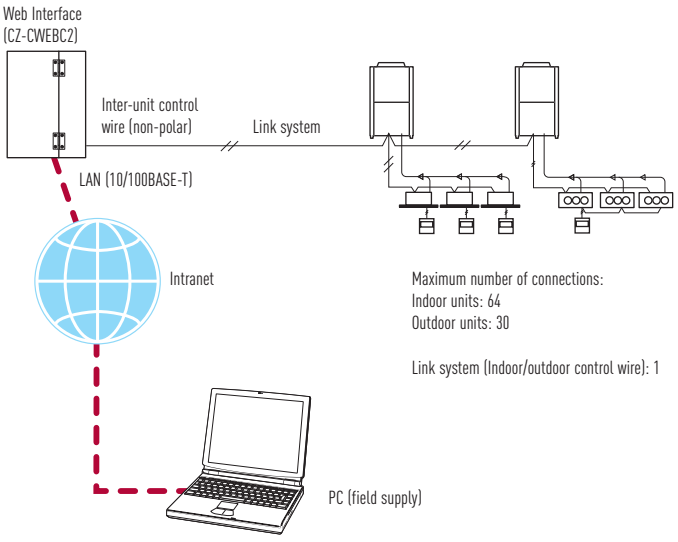

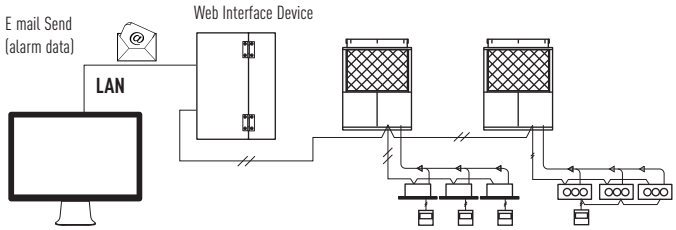



Functions

- Access and operation by Web browser.
- Icon display.
- Language codes available in English, French, German, Italian, Portuguese, Spanish.
- Individual control possible (max. 64 indoor units) ON/OFF operation mode, set temperature, fan speed, Flap set, timer ON/OFF alarm code monitoring, prohibit Remote Control.
- Each Tenant (Zone) control.
- All Units control.
- Alarm Log.
- Mail Sent Log.
- Program Timer set 50 daily timers with 50 actions each day, 50 weekly timers 50 weekly timers, 1 holiday timer, 5 special day timers, for each tenant.
- Prohibit Remote Control settings.
- IP Address could be changed via Internet.

Note: it is recommended to install a remote controller or a system controller on site to enable local control if IT network experiance a problem.

Centralised Control Systems

Seri-Para I /O unit for outdoor unit (CZ-CAPDC2 for ECOi / CZ-CAPDC3 for Mini ECOi and PACi)



- This unit can control up to 4 outdoor units.
- From the central control device, mode changing and batch operation/batch stop are possible.
- Required for demand control.

Dimensions (H x W x D): 80 x 290 x 260mm.
Power supply: Single Phase 100/200V (50/60Hz), 18W.
Input: Batch operation/Batch stop (non-voltage contact/DC 24 V, pulse signal). Cooling/Heating (non-voltage contact/static signal). Demand 1/2 (non-voltage contact/static signal) (Local stop by switching)
Output:Operation output (non-voltage contact).
Alarm output (non-voltage contact)

Wiring length:Indoor/Outdoor operation lines: Total length 1 km. Digital signal: 100 m or shorter

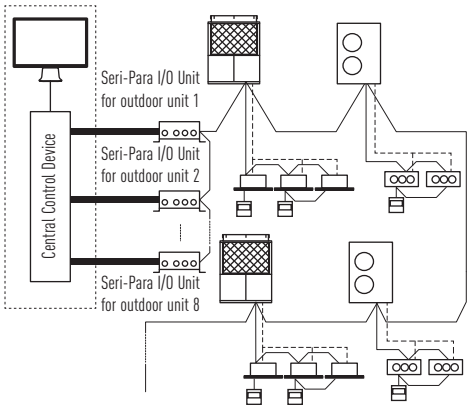

Local adaptor for ON/OFF control (CZ-CAPC2)



- Control and status monitoring is possible for individual indoor unit (or any external electrical device up to 250 V AC, 10 A) by contact signal.

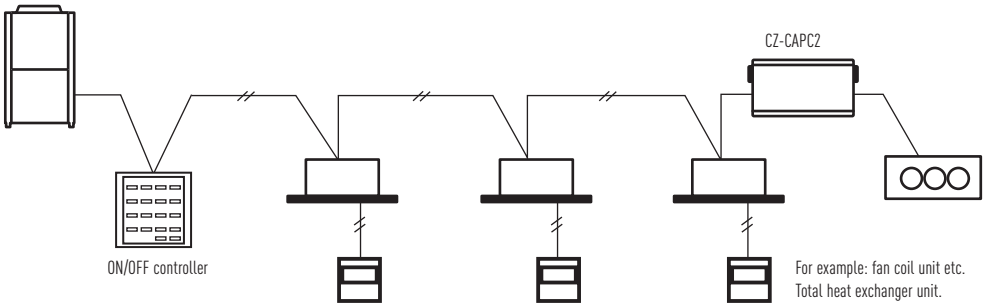

Demand Control 0 -10 V (CZ-CAPBC2)

NEW

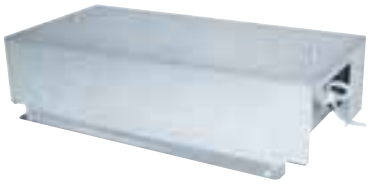

- Control and status monitoring is possible for individual indoor unit (1 group).
- In addition to operation and stop, there is a digital input function for air speed and operation mode.
- Temperature setting and measuring of the indoor suction temperature can be performed from central monitoring.
- **NEW!** The analog imput for demand of the outdoor capacity by 20 steps (from 40% to 120%) by 0-10V.
- The analog input for temperature setting is 0 to 10 V, or 0 to 140 Ohm.
- Power is supplied from the CZ-T10 terminal of the indoor units.
- Separate power supply also is possible (in case of suction temperature measuring).

* Available in April. Ask to your distributor.

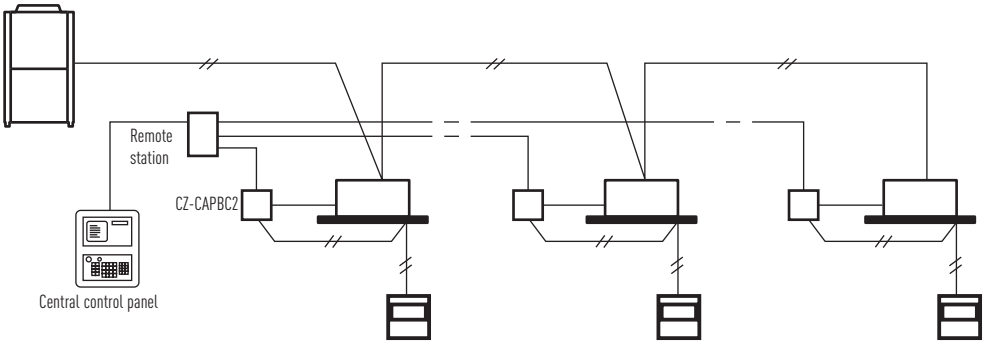

P-AIMS. Panasonic Total Air Conditioning Management System

P-AIMS Basic software / CZ-CSWKC2

Up to 1024 indoor units can be controlled by one PC.

Functions of basic software

- Standard remote control for all indoor units.
- Many timer schedule programs can be set on the calender.
- Detailed information display for alarms.
- CSV file output with alarm history, operating status.
- Automatic data backup to HDD.





With 4 upgrade packages the basic software can be upgraded to suit individual requirements

P-AIMS is suitable for large shopping centers and universities with many areas/ buildings. 1 "P-AIMS" PC can have 4 independent systems at once. Each system can have max. 8 C/A units, and control max. 512 units. In total, 1024 indoor units can be controlled by 1 "P-AIMS" PC.

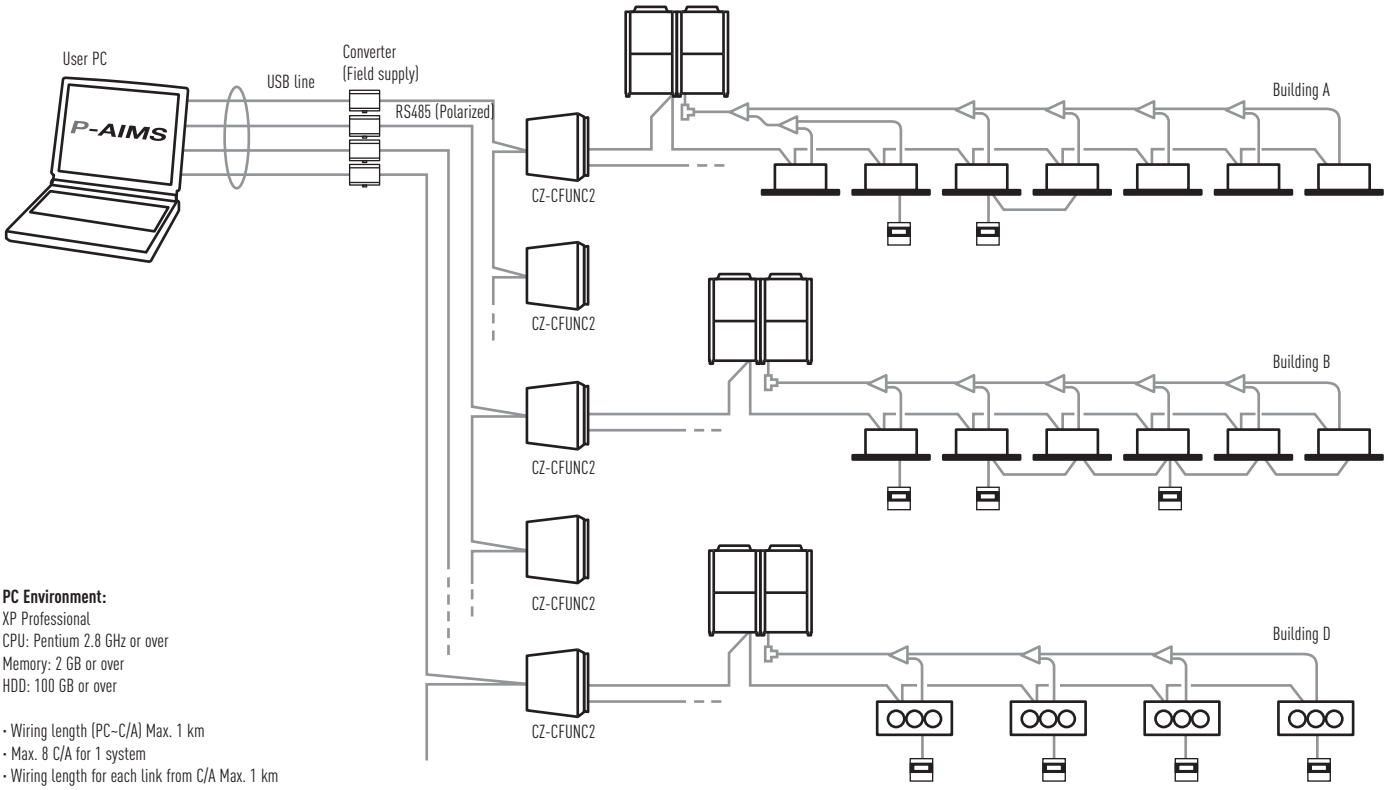

PC Environment:
XP Professional
CPU: Pentium 2.8 GHz or over
Memory: 2 GB or over
HDD: 100 GB or over

- Wiring length (PC–C/A) Max. 1 km
- Max. 8 C/A for 1 system
- Wiring length for each link from C/A Max. 1 km

P-AIMS optional software CZ-CSWAC2 for Load distribution
Load distribution calculation for each tenant

- Air-conditioner load distribution ratio is calculated for each unit (tenant) with used energy consumption data (m^3, kWh).
- Calculated data is stored as a CSV type file.
- Data from the last 365 days is stored.

P-AIMS optional software CZ-CSWWC2 for Web application
Web access & control from remote station

- Accessing P-AIMS software from remote PC.
- You can monitor/operate ECOi 6N system by using Web browser (Internet Explorer).

P-AIMS optional software CZ-CSWGC2 for Object layout display
Whole system can be controlled visually

- Operating status monitor is available on the layout display.
- Object's layout and indoor unit's location can be checked at once.
- Each unit can be controlled by virtual remote controller on the display.
- Max. 4 layout screens are shown at once.

P-AIMS optional software CZ-CSWBC2 for BACnet software interface
Connectable to BMS system

- Can communicate with other equipment by BACnet protocol.
- ECOi 6N system can be controlled by both BMS and P-AIMS.
- Max. 255 indoor units can be connected to 1 PC (that has P-AIMS basic & BACnet software).

Centralised Control Systems



NEW Centralised Control Systems

A custom web application to manage the centralized operation of A2W and GHP systems.

Operation and monitoring of devices connected to the new Management System can be realized both remotely/locally from any device with connection to the internet (Laptop, Tablet, Mobile)

The new system will make the interaction with air conditioning systems easier, improving the operation set as well as the global control of installations.

The application will act with various units, regardless of whether they are available in the same intranet or in different locations, transparently to users at any time. In this way, our solution allows to overcome main restrictions like onsite maintenance or the lack of centralization.

In addition, the application offers significant improvements in terms of control:

- Aircon units can be grouped in a totally custom way
- Possibility to realize group commands and batch commands (in succession)
- Alarms and events can be controlled more efficiently and a lot more...

Features of current system

Operation Functions

- Start & Stop
- Temperature settings
- Operation mode selection
- Fan speed, Fan direction settings
- Prohibition of use of remote controller

Operation Monitoring

- Monitoring of operation status and alarms
- Monitoring of filter cleaning signs
- Display of alarm logs

Program Timers

- Up to 50 types of weekly timer
- Holiday and Special Days

Current installation

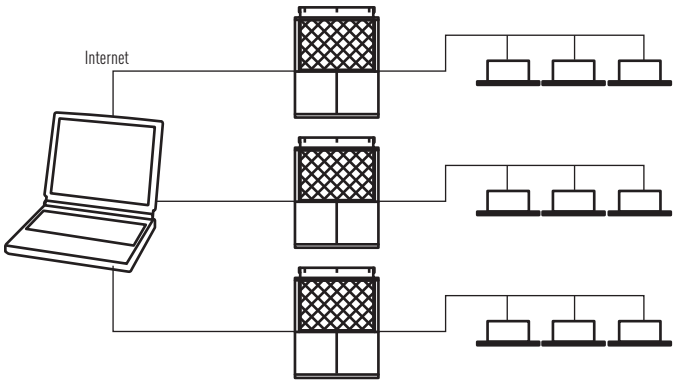

Main restrictions: Decentralization: need to connect to every CZ-WEB one by one to manage installation.
On-site maintenance: Access limited to local network.

Offer reliable solution to improve existing functionalities

- Running timer
- Remote control through Web Cloud Application or local. Accessible anytime, anywhere, via a device with internet connection
- Centralized Control: Manage several installations in one single interface. Ideal for multi-site organizations
- Easy monitoring and maintenance thanks to group commands, and batch commands. Easy supervision of complex installations
- Secure Remote Access. Powerful identity protection and convenient access control

Benefits

The new solution for the centralized control of air conditioning systems offers significant benefits for the different actors involved in its management:

For the building Ownership:

- Maximum equipment performance
- Energy saving
- Increased lifetime of equipment
- Savings in maintenance costs

For Maintenance companies:

- Instant knowledge of any incident
- Possibility of preventive alarms
- Reduction of systematic visits (warning and remote control)
- More effective maintenance support

Internet Control. Control your air conditioning system with your smart device -smartphone & internet for VRF Systems



Reference PA-RC2-WIFI-1



KX-UT670 Smart Desktop Phone from Panasonic.

Control your comfort and efficiency with the lowest energy consumption

What's Internet Control?

Internet Control is a next generation system providing a user-friendly remote control of air conditioning or heat pump units from everywhere, using a simple Android or iOS smartphone, tablet or PC via internet.

Simple Installation

Just connect the Internet Control device to the air conditioner or heat pump with the supplied wire and then link it to your WIFI Access point.

Internet Control. Easy to install. Maximum benefit

Internet Control is underlined with the slogan "Your home in the cloud", meaning a simple and easy to handle solution has been considered for every user to manage the device, not requiring any communication or computer skills.

No servers. No adaptors. No wires. Just a small box is needed to be connected and placed close to the air conditioning indoor unit... and your smartphone, tablet or PC.

Start the App from your smartphone device, your tablet or your computer, and enjoy a new experience in comfort. An intuitive and user-friendly application on the screen of your smartphone or PC that lets you manage the air conditioning unit in the same way you do with the remote controller. Internet Control can be downloaded in Apple's AppStore and Android's PlayStore.

Control your air conditioning with the smart internet control device via smartphones, tablet, PC and smart desktop phone via internet

Offering the same functions as if you were at home or office: start/stop, Mode Operation, Set Temperature, Room Temperature etc as well as the new, advanced functionality provided by Internet Control to achieve the best comfort and efficiency with the lowest energy consumption.





Case Study. Paul, Business Man

"My business is growing but I still want to feel like I'm in control. So I carry out all the arrangements, transactions and operations I can from my mobile. From bank transactions, processing orders, to controlling the temperature at the company's different plants; I do everything from my smartphone thanks to IntesisHome and Panasonic."

Take control from wherever you are!

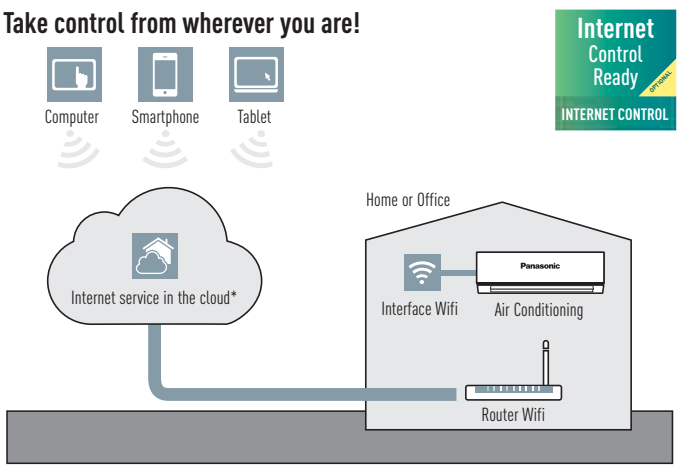

* Functionalities depend on the license. The information indicated above is subject to changes and updates.

ECOi and GHP Connectivity. New Plug and play interface connected directly to the P-Link



Great flexibility for integration into your KNX / EnOcean / Modbus / LonWorks / BACnet projects allows fully bi-directional monitoring and control of all the functioning parameters Panasonic Partners have designed solutions specifically for Panasonic air conditioners, and provide complete monitoring, control and full functionality of the entire Commercial line-up from KNX / EnOcean / Modbus / LonWorks / BACnet installations.
For more information, contact Panasonic.

Easy
control
by BMS
CONNECTIVITY

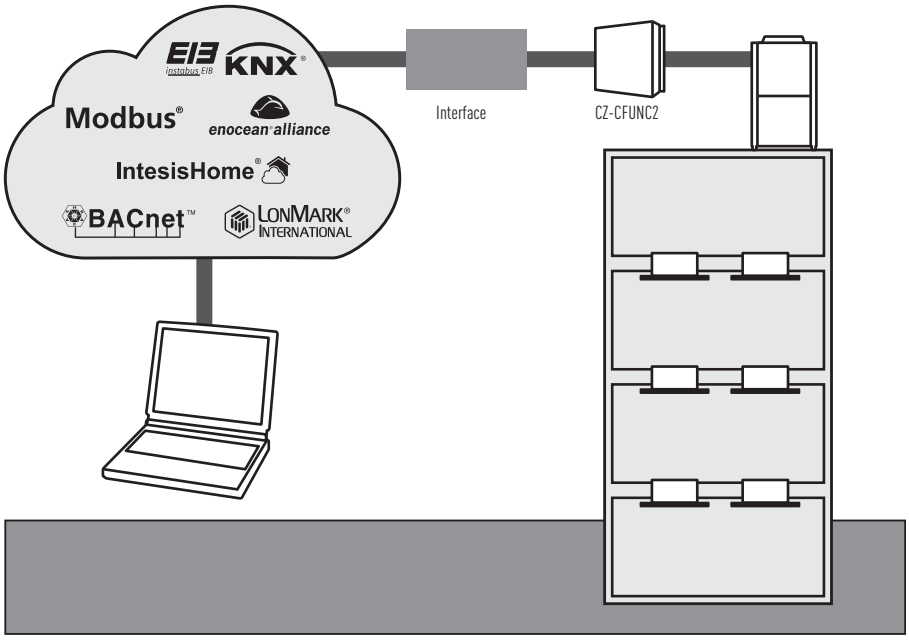

Communication adaptor (CZ-CFUNC2)
This communication interface is required to connect a ECOi and GHP systems to a BMS. An additional interface is needed to convert the information into KNX/Modbus/Bacnet language. CZ-CFUNC2 is very easy to operate and to connect to the Panasonic P-link, which is the ECOi bus. From the CZ-CFUNC2, all the indoor and outdoor units of the installation can be easily control. Two linked wiring systems can be connected to one CZ-CFUNC2.
Dimensions: H 260 x W 200 x D 68mm

* As this is not a splash-proof design, it must be installed indoors or in the control panel, etc.

	Panasonic Model name	Interface	Connected on P-link or in the indoor unit	Maximum number of indoor units connected
ECOi / PACi Indoor Units	PAW-RC2-KNX-1i	KNX	Indoor unit	1 (1 Group of Indoor units)
	PAW-RC2-MBS-1	Modbus RTU*	Indoor unit	1 (1 Group of Indoor units)
	PAW-RC2-ENO-1i	EnOcean	Indoor unit	1 (1 Group of Indoor units)
	PA-RC2-WIFI-1	IntesisHome	Indoor unit	1 (1 Group of Indoor units)
ECOi P-Link	PAW-AC-KNX-64	KNX**	P-link	64
	PAW-AC-KNX-128	KNX**	P-link	128
	PAW-TM-MBS-RTU-64	Modbus RTU**	P-link	64
	PAW-TM-MBS-TCP-128	Modbus TCP**	P-link	128
	PAW-AC-BAC-64	Bacnet**	P-link	64
	PAW-AC-BAC-128	Bacnet**	P-link	128
	CZ-CLNC2	Lonworks	P-link	16 groupes of max. 8 indoor units, in total max. 64 indoor units

* Interface Modbus RTU/TCP is needed in case if Modbus TCP connection. PAW-MBS-TCP2RTU (ModBus RTU Slave devices).
** Interface CZ-CFUNC2 needed.

Example of BMS connection for air conditioner central control system

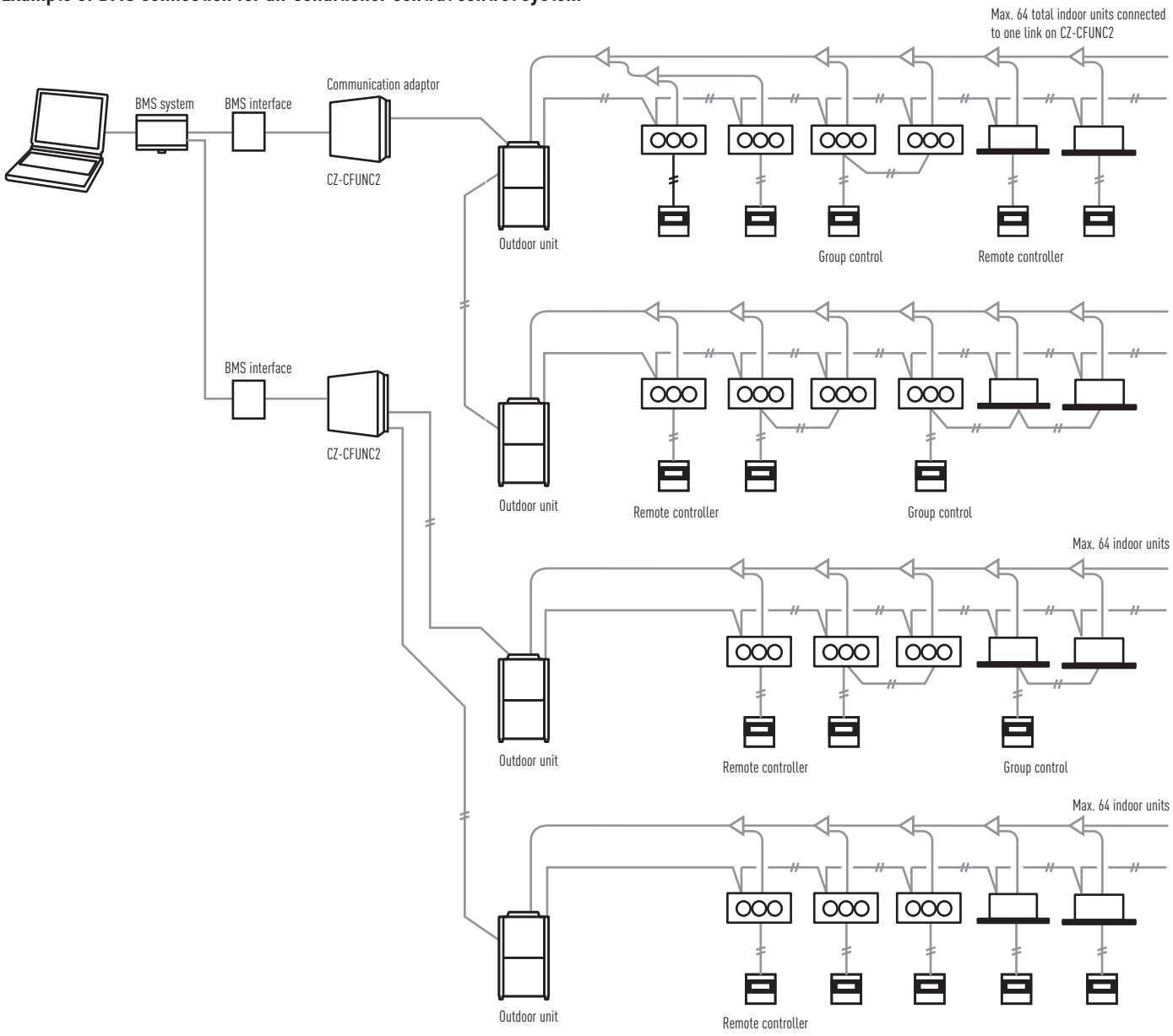

	Unit ON/OFF
A/C unit settings	Mode-change
	Room temperature setting
	Fan speed setting
	Flap setting
	Central control setting
	Filter-sign clear
	Alarm reset

	Unit ON/OFF status
A/C unit status	Operation mode
	Setting temperature
	Fan speed status
	Flap status
	Central control setting
	Filter-sign situation
	Correct/incorrect status
	Alarm code

ECOi, ECO G and PACi Connectivity indoor units

PCB's and cables for ECOi, ECO G and PACi indoor units		
Name of the cables	**Function**	**Comment**
CZ-T10	All T10 functions	Requires field supplied accessory
PAW-FDC	Operate external fan	Requires field supplied accessory
PAW-OCT	All option monitoring signals	Requires field supplied accessory
CZ-CAPE2	Option monitoring signals wo. fan	Requires aditional wires from spare part supply
PAW-EXCT	Forced Thermo OFF/Leakage D.	Requires field supplied accessory
Name of the PBC	**Function**	**Comment**
PAW-T10	All T10 functions	Allows easy connection "Plug & Play"
PAW-T10V	All T10 functions + powermonitoring	Same like PAW-T10 + monitoring the power supply of indoor unit
PAW-T10H	ON/OFF; Prohibit 5VDC & 230VAC	Specials for single hotel card or window contact
PAW-T10HW	ON/OFF; Prohibit 5VDC	For hotel card + window contact at same time
PAW-PACR3	Redundancy of 2 or 3 systems; for ECOi and PACi	Redundancy of 2 or 3 ECOi or PACi systems including temperature monitoring, error indication, backup, alternative run
PAW-SERVER-PKEA	Redundancy of 2 units PKEA	Redundancy of 2 units PKEA including temperature monitoring, error indication, backup, alternative run

T10 connector (CN015)

CZ-T10: Panasonic has developed an optional accessory (consisting of plug + wires) called CZ-T10 to enable an easy connection to this T10 connector.



Connecting an ECOi indoor unit to an external device is easy. The T10 terminal featured in the electronic circuit board of all indoor units enables digital connection to external devices.

EXAMPLE OF APPLICATIONS





T10 terminal Specification (T10: CN015 at indoor unit PCB)

- Control items: 1. Start/stop input
  2. Remote controller prohibit input
  3. Start signal output
  4. Alarm signal output

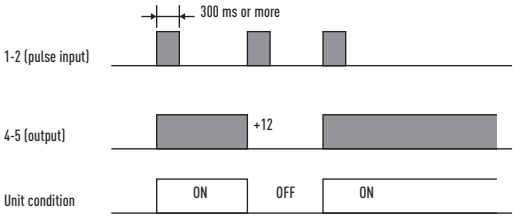

NOTE: The wire length from indoor unit to the Relay must be within 2.0 m. Pulse signal changeable to static with JP cutting. (Refer to JP001)

- Condition

1. 1-2 (Pulse input): Unit ON/OFF condition switching with a pulse signal. (1 pulse signal: shortage status more than 300 msec. or more)
2. 2-3 (Static input): Open / Operation with Remote is permitted.(Normal condition) Close / Remote controller is prohibited.
3. 4-5 (Static output): 12 V output during the unit ON. / No output at OFF.
4. 5-6 (Static output): 12 V output when some errors occur / No output at normal.

- Example of wiring

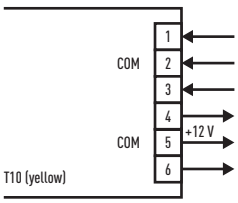

Usage Example

Forced OFF control

Term 1 & 2: Free contact for ON/OFF signal (cut *JP1* for static signal) when the hotel card is it connected the contact must be close (the unit can be used).

Term 2 & 3: Free contact to prohibit all function in the remote controller install in the room when the hotel card is it removed the contact must be closed (the unit can not work).

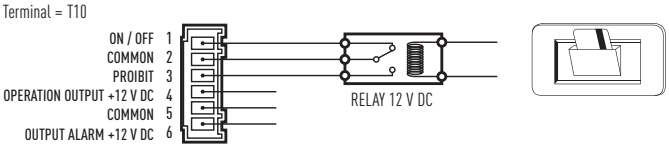

Operation ON/OFF signal output

- Condition:
  4-5 (Static output): 12 V output during the unit ON / No output at OFF
- Example of wiring

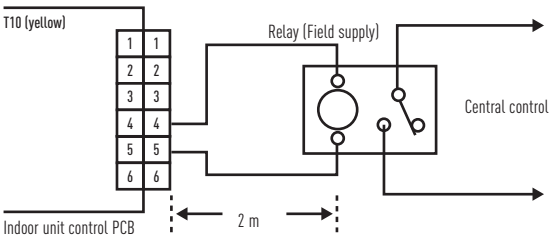

NOTE: The wire length from indoor unit to the Relay must be within 2.0 m. Pulse signal changeable to static with JP cutting. (Refer to JP001)

Fan Drive Connector (CN032)

PAW-FDC: Panasonic has developed an optional accessory (consisting of plug + wires) called PAW-FDC to enable an easy connection to this Fan Drive Connector (CN032).



Operating the ventilation fan from the remote controller

- Start / stop of external ventilation and total heat exchanger fans
- Works even if indoor unit is stopped
- In case of group control ➔ all fans will operate; no individual control

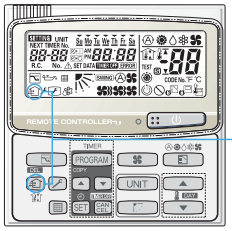

Ventilation button

EXTERNAL FAN ON / OFF

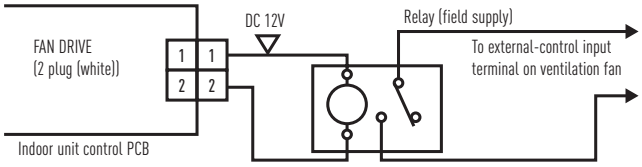

Option Connector (CN060) Output external signals



PAW-OCT: Panasonic has developed an optional accessory (consisting of plug + wires) called PAW-OCT to enable an easy connection to this Option Connector (CN060).

With the combination of the T10 and the option CN060 an external control of the I_U is possible!

6P (WHITE): OUTPUTS EXTERNAL SIGNALS AS SHOWN IN THE FIGURE BELOW.

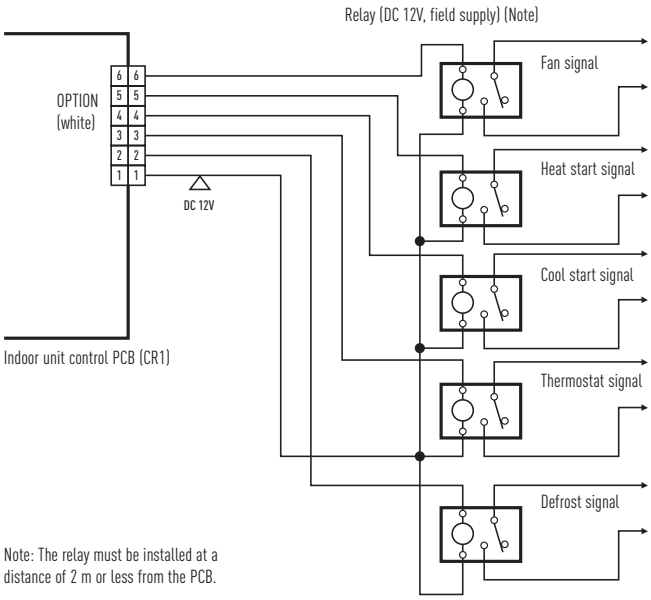

Note: The relay must be installed at a distance of 2 m or less from the PCB.

EXCT Connector (CN009)

PAW-EXCT: Panasonic has developed an optional accessory (consisting of plug + wires) called PAW-EXCT to enable an easy connection to this EXCT Connector (CN009).

A) With static input
➔ STATIC INPUT ➔ THERMO OFF ➔ ENERGY SAVING

2P plug (red): Can be used for demand control. When input is present, forces the unit to operate with the thermostat OFF.

Note: The length of the wiring from the indoor unit control PCB to the relay must be 2m or less.
* Lead wire with 2P plug (special—order part: WIRE K/854 05280 75300)

- Examples of wiring:

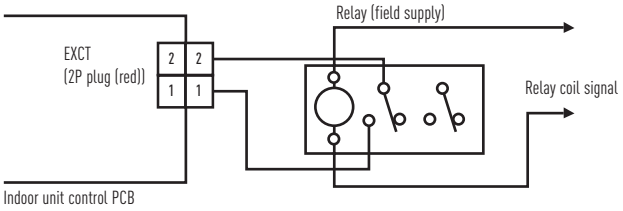

B) Example: In connection with a refrigerant sensor

- Signal from leakage detector: non voltage, static.
- Indoor unit setting: Code 0b ➔ 1
- Connector for leak detector: EXCT
- Outdoor unit setting:
  Code C1 ➔ 1 power output if alarm from O2 connector 230 V
  Code C1 ➔ 2 power output if alarm from O2 connector 0 V
- Displayed alarm message P14

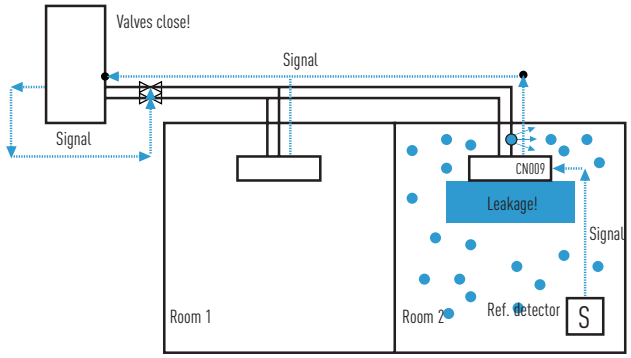



Possible to use on **R22 pipings**

R22 RENEWAL

R22 Renewal

An important drive to further reduce the potential damage to our ozone

Unique R22 Renewal from Panasonic: Fast, easy to install and cost effective

- Panasonic refrigerant oil that doesn't react to the most common oil types used in air-conditioning systems. This make the mix of oil does not damage the units. The installations is easier
- All Panasonic ECOi units can be install in R22 pipings, no specific models are available
- Up to 33 Bar! When there is any doubt about the strength of the piping, the maximum working pressure can be reduced to 33 bar with a setting in the software of the outdoor unit

Required Parameter setting for the renewal system			
Model type	**Item code**	**Setting data**	**Remarks**
3-Pipe VRF System	4B	Set to 0001 = Renewal system operation (Factory set = 0000)	Setting only for Master unit
2-Pipe VRF System (ME1E81 series only)	4B	Set to 0000 = Renewal system operation (Factory set = 0002)	Setting only for Master unit
Mini VRF System	4B	Set to –001 = Renewal system operation (Factory set = 0000)	

Depending on the outdoor unit type to be used for renewal installation, one additional setting has to be changed properly before starting a test-run operation of the new system. The renewal system operating condition (design pressure: 3,3MPa) will be set by this parameter change. Refer to the following table and be sure to change the parameter accordingly. A maintenance remote controller for the outdoor unit is required to change the relevant parameter. (See the maintenance remote controller's instruction manual for further details on connections and usage methods.)

Why renewal?

It is often said that legislation is ruling our lives but sometimes it is there to help save lives. R22 phase out can be described as one of these and from Jan 1st 2010 the use of Virgin (new) R22 refrigerant was banned within the European Community.

Panasonic are doing our part

We at Panasonic are also doing our part – recognising that all finances are under pressure at the moment. Panasonic have developed a clean and cost effective solution to enable this latest legislation to be introduced with as minimum an effect on businesses and cash reserves as possible.
The Panasonic renewal system allows good quality existing R22 pipe work to be re-used whilst installing new high efficiency R410A systems.
By bringing a simple solution to the problem Panasonic can renew all Split Systems and VRF systems; and depending upon certain restrictions we don't even limit the manufactures equipment we are replacing.

By installing a new high efficiency Panasonic R410A system you can benefit from around 30% running cost saving compared to the R22 system.
Yes...
1. Check the capacity of the system you wish to replace
2. Select from the Panasonic range the best system to replace it with
3. Follow the procedure detailed in the brochure and technical data

Simple...

R22 - The reduction of Chlorine critical for a cleaner future.

Panasonic's Renewal system allows a completely new VRF system, indoor and outdoor units, to be installed using the existing systems pipe work.
Panasonic's advanced technology enables the system to work with previously installed pipe work by managing the working pressure within the system down to R22 (33 bar) levels, this ensures the system works safely and efficiently without loss of capacity.
The new equipment can offer increased COP/EER by using state of the art inverter compressor and heat exchanger technology.
Having contacted your Panasonic supplier regarding pipe work restrictions and gained approval to use the Panasonic Renewal System there are three main tests that have to be carried out to ensure that the system can be used effectively.
Firstly a thorough inspection of the pipe work must be carried out and any damage must be repaired.
Secondly an oil test has to be carried out to ensure that the system has not been subject to a compressor burnout during its lifetime, Lastly a VRF Renewal Kit (CZ-SLK2) has to be installed within the pipe work to ensure that the system is cleaned of any remnants of oil.

VRF Renewal Kit (CZ-SLK2) and Sight Glass

The following shows an overview of the VRF Renewal Kit (CZ-SLK2) that is required when existing tubing is reused. If the exact tube length and tube size of the existing tubing are uncertain, attach a sight glass in accordance with the figure below. It will be used for checking the amount of additional refrigerant charge.

VRF Renewal Kit: CZ-SLK2

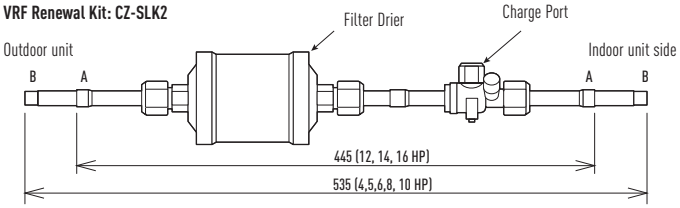

Connecting tube dimensions (Inch (mm)): A Ø 1/2 (12.7) (12, 14, 16 HP) - B Ø 3/8 (9.52) (4,5,6,8 10 HP)

Note: If the tube size does not match that of the existing tubing, use a reducer (field supply) to adjust the tube diameter.

Sight glass (field supply)

If the exact tube length and tube size of the existing tubing are uncertain, attach a sight glass to the liquid tubing, and use it to check whether there is an appropriate amount of additional refrigerant charge.

Attaching the Filter Drier Kit and sight glass

- To adjust the limited pressure level into 3,3 MPa only, special setting is necessary at site.
- A filter Drier shall be attached to the liquid tubing of each outdoor unit.
- High-Pressure switches shall be attached to both the liquid and the gas tubings of each outdoor unit.
- There is no need to remove the Filter Drier Kit after a test run is performed because normal operation continues while it is attached. (High pressure switch kit: CZ-PSWK2 (for 2 Way and 3-way).
- When attaching the Filter Drier Kit, care shall be taken with reguards to the installation location and orientation of the filter drier and ball valve. If a mistake is made, the refrigerant is the system needs to be recovered when the filter drier is replaced, which will make maintenance difficult.
- Thermal insulation material (field supply: heat resistance of 80°C or higher and thickness of 10mm or greater) shall be applied to the Filter Drier Kit.
- The filter drier of the Filter Drier Kit may need to be replaced depending on the condition of the existing unit. Use a Danfoss DMB 164 as the replacement filter drier (field supply).

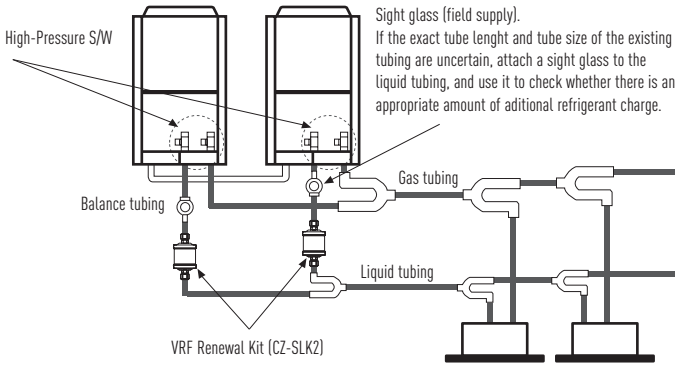

Procedure for VRF Renewal

Judgment 1	Is the existing pipe work reusable?
Judgment 2	Is the pipe work length and the installation height difference of the existing pipe work within the tolerance ranges of the new system?
Judgment 3	Is the existing pipe work within the ranges of reusable tube size?
Judgment 4	Is the additional refrigerant charge at or below the upper limit?
Judgment 5	Is there a problem with dirt inside the existing pipe work?

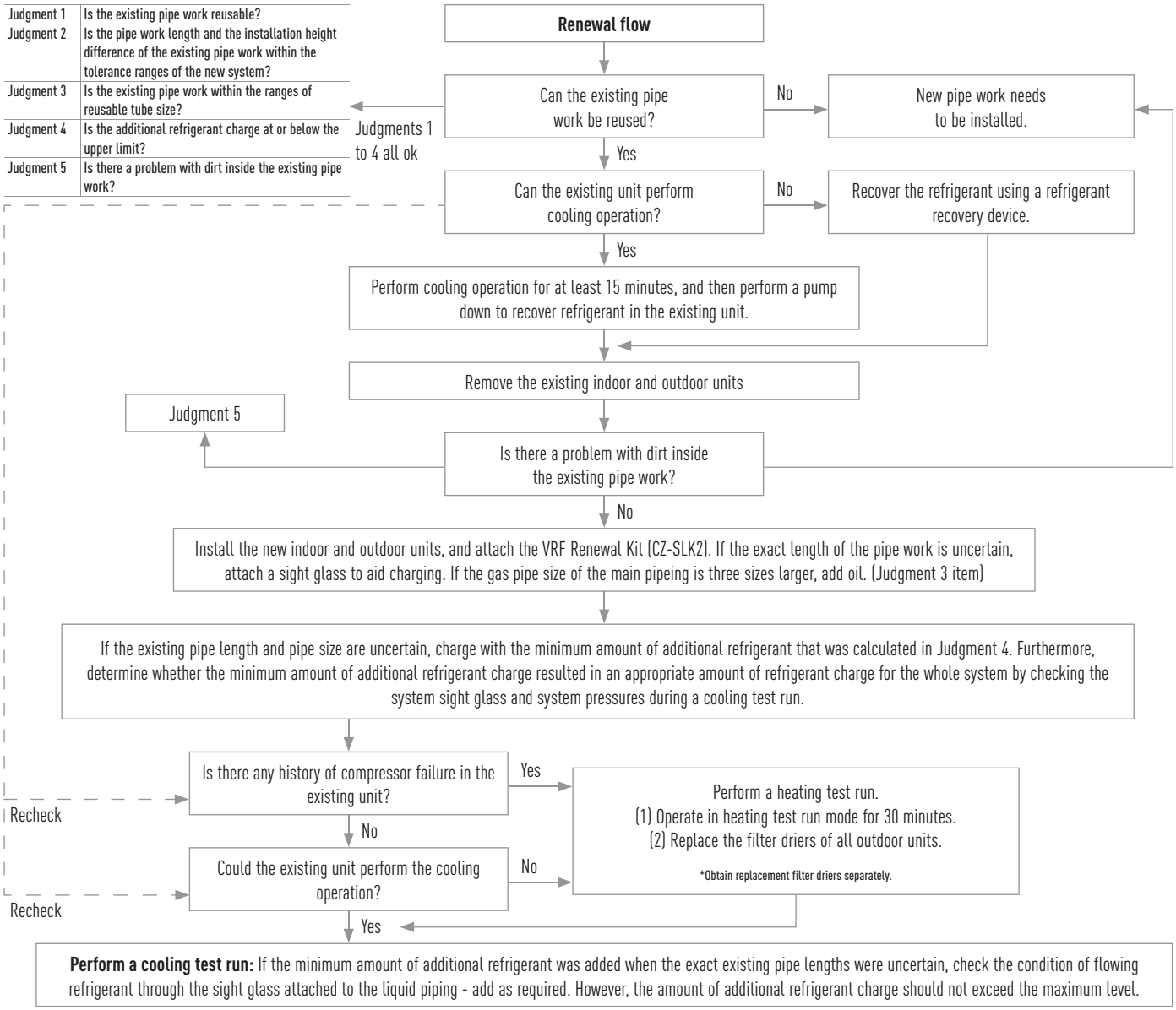

Branches

Dimensions and Tube Sizes of Branches and Headers for 2-Pipe ECOi 6N Systems

Optional Distribution Joint Kits

See the installation instructions packaged with the distribution joint kit for the installation procedure.

	Cooling capacity after distribution	Remarks
Outdoor unit side	68,0 kW or less	CZ-P680PH2BM
	From 68,0 kW to 168,0 kW	CZ-P1350PH2BM
Indoor unit side	22,4 kW or less	CZ-P224BK2BM
	From 22,4 kW to 68,0 kW	CZ-P680BK2BM
	From 68,0 kW 168,0 kW or less	CZ-P1350BK2BM

Tubing size (with thermal insulation)

CZ-P680PH2BM

For outdoor unit side (Capacity after distribution joint is 68,0 kW or less).

Gas tubing

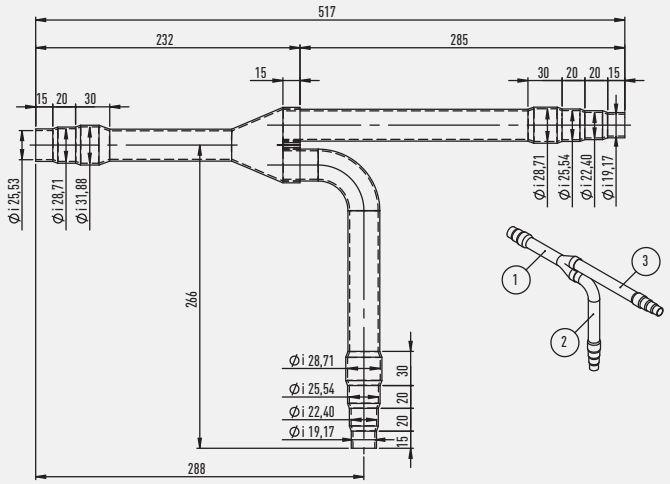

Liquid tubing

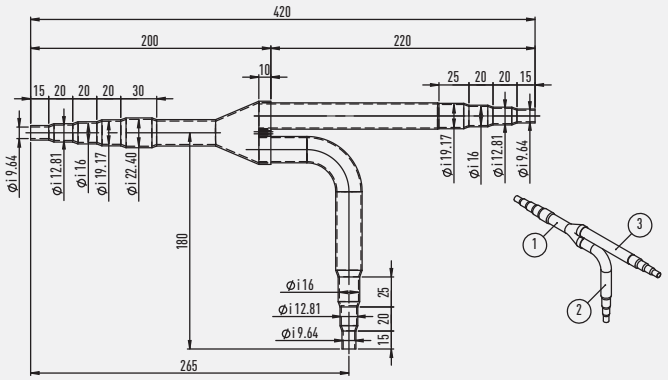

Unit:mm

CZ-P1350PH2BM

For outdoor unit side (Capacity after distribution joint is greater than 68,0 kW and no more than 168,0 kW).

Gas tubing

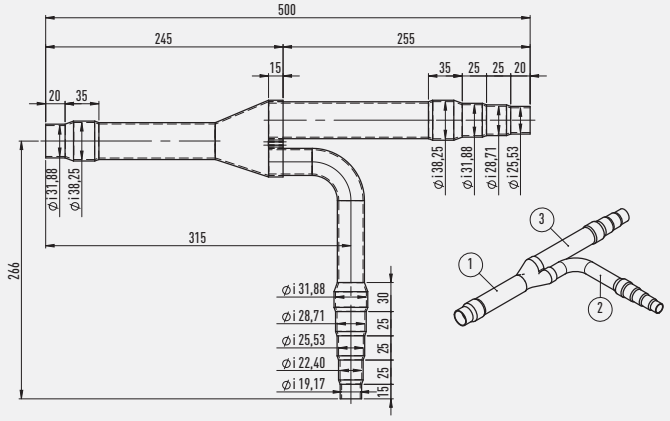

Liquid tubing

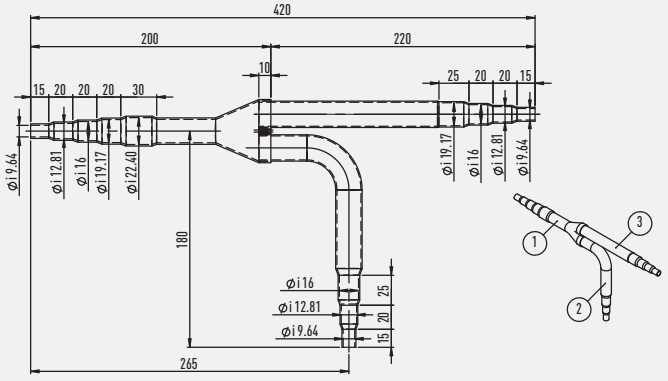

Unit:mm

CZ-P224BK2BM

For indoor unit side (Capacity after distribution joint is 22,4 kW or less).

Gas tubing

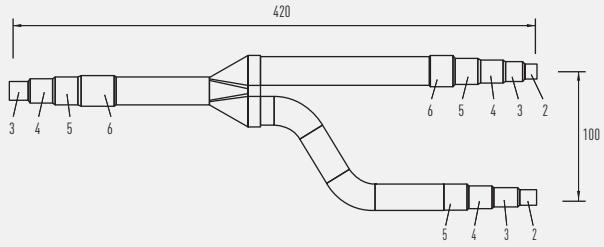

Liquid tubing

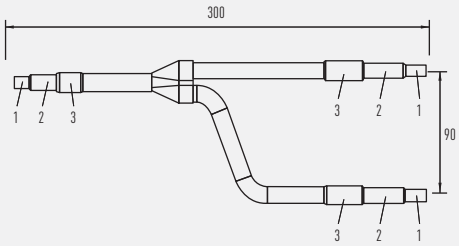

Unit:mm

CZ-P680BK2BM

For indoor unit side (Capacity after distribution joint is greater than 22,4 kW and no more than 68,0 kW).

Gas tubing

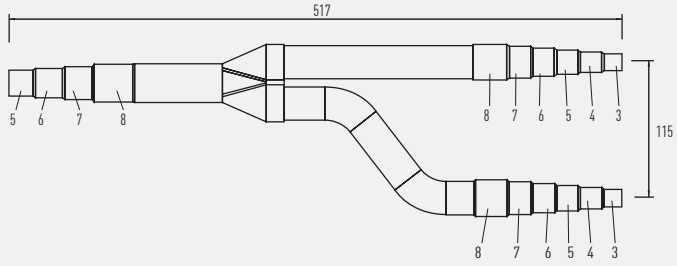

Liquid tubing

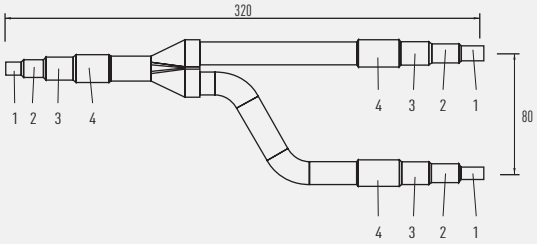

Unit:mm

CZ-P1350BK2BM

For indoor unit side (Capacity after distribution joint is greater than 68,0 kW and no more than 168,0 kW).

Gas tubing

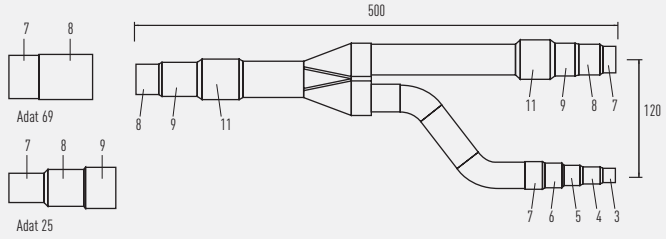

Liquid tubing

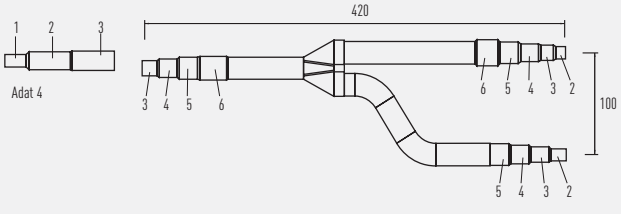

Unit:mm

Diameters		Diameters		Diameters	
1	6,35 mm 1/4"	6	22,40 mm 7/8"	11	38,10 mm 1"1/2
2	9,52 mm 3/8"	7	25,40 mm 1"	12	41,28 mm 1"5/8
3	12,70 mm 1/2"	8	28,57 mm 1" 1/8	13	44,45 mm 1"3/4
4	15,88 mm 5/8"	9	31,75 mm 1" 1/4	14	50,80 mm 2"
5	19,05 mm 3/4"	10	34,92 mm 1"3/8		

Branches

Dimensions and Tube Sizes of Branches and Headers for 3-Pipe ECOi 6N Systems (MF2)

Optional Distribution Joint Kits

See the installation instructions packaged with the distribution joint kit for the installation procedure.

	Capacity after distribution joint	Remarks
For outdoor unit	68,0 kW or less	CZ-P680PJ2BM
	Greater than 68,0 kW and no more than 135,0 kW	CZ-P1350PJ2BM
For indoor unit	22,4 kW or less	CZ-P224BH2BM
	Greater than 22,4 kW and no more than 68,0 kW	CZ-P680BH2BM
	Greater than 68,0 kW and no more than 135,0 kW	CZ-P1350BH2BM

Tubing size (with thermal insulation)

CZ-P680PJ2BM

For outdoor unit side (Capacity after distribution joint is 68,0 kW or less).

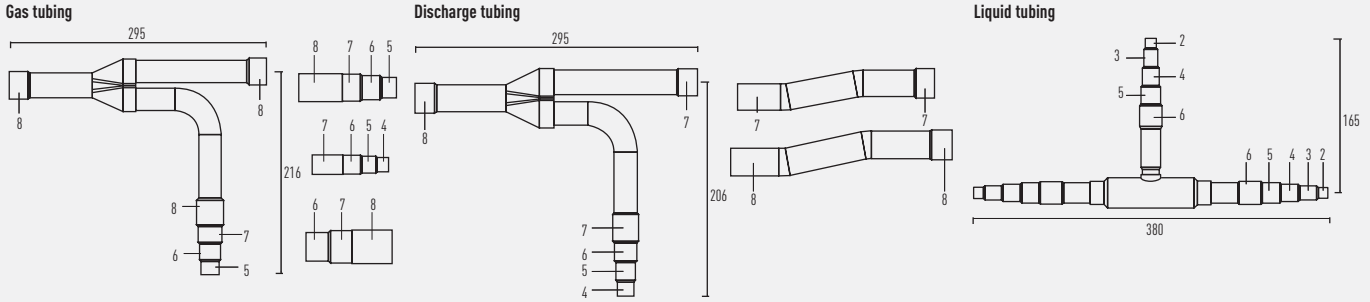

Unit:mm

CZ-P1350PJ2BM

For outdoor unit side (Capacity after distribution joint is greater than 68,0 kW and no more than 135,0 kW).

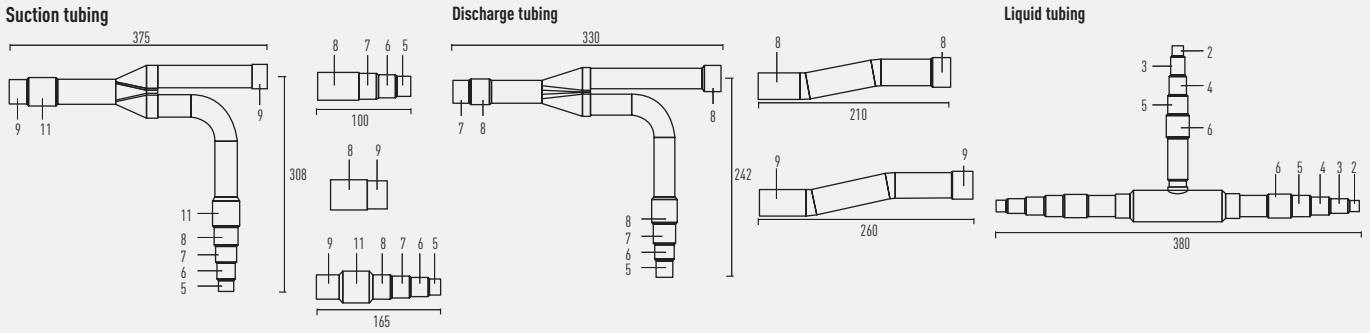

Unit:mm

CZ-P224BH2BM

For outdoor unit side (Capacity after distribution joint is 22,4 kW or less).

Suction tubing

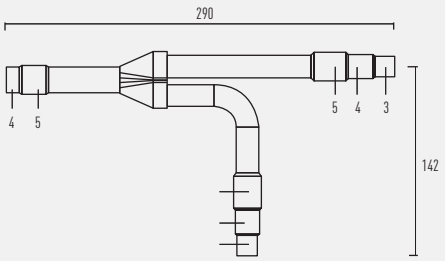

Discharge tubing

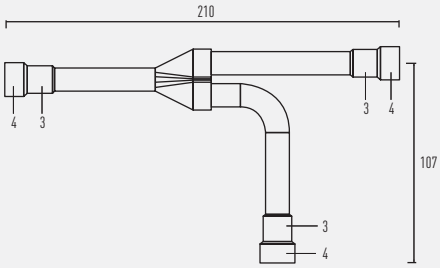

Liquid tubing

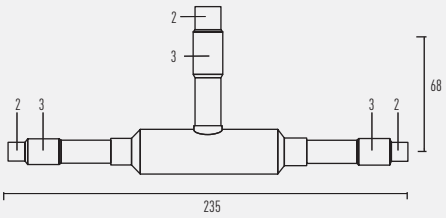

Unit:mm

CZ-P680BH2BM

For outdoor unit side (Capacity after distribution joint is greater than 22,4 kW and no more than 68,0 kW).

Suction tubing

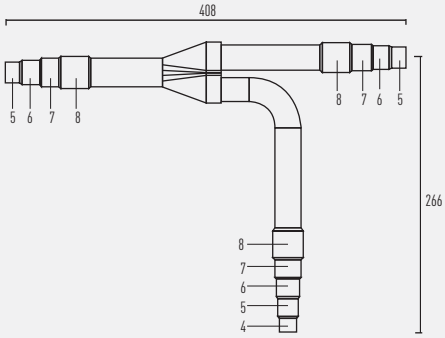

Discharge tubing

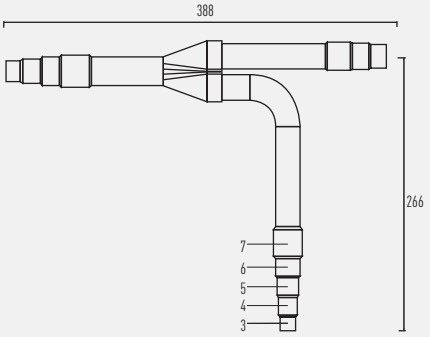

Liquid tubing

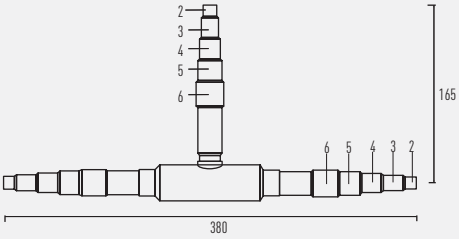

Unit:mm

CZ-P1350BH2BM

For outdoor unit side (Capacity after distribution joint is greater than 68,0 kW and no more than 135,0 kW).

Suction tubing

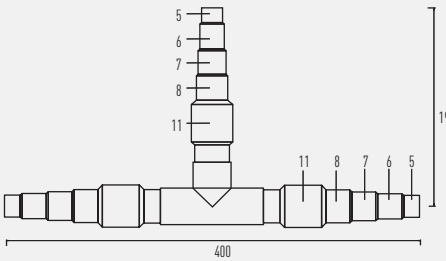

Discharge tubing

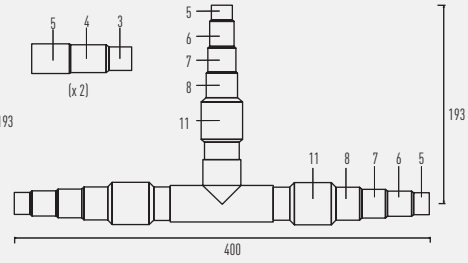

Liquid tubing

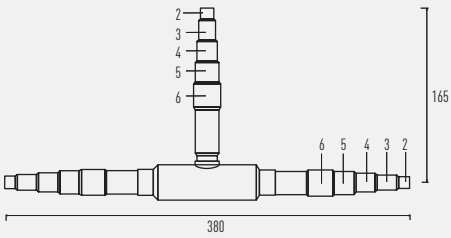

Unit:mm

Diameters		Diameters		Diameters	
1	6,35 mm 1/4"	6	22,40 mm 7/8"	11	38,10 mm 1"1/2
2	9,52 mm 3/8"	7	25,40 mm 1"	12	41,28 mm 1"5/8
3	12,70 mm 1/2"	8	28,57 mm 1" 1/8	13	44,45 mm 1"3/4
4	15,88 mm 5/8"	9	31,75 mm 1" 1/4	14	50,80 mm 2"
5	19,05 mm 3/4"	10	34,92 mm 1"3/8		

Headers

Header pipe set for ECOi 6N 2-Pipe system

CZ-P4HP4C2BM

Header pipe models for 2-Pipe systems.

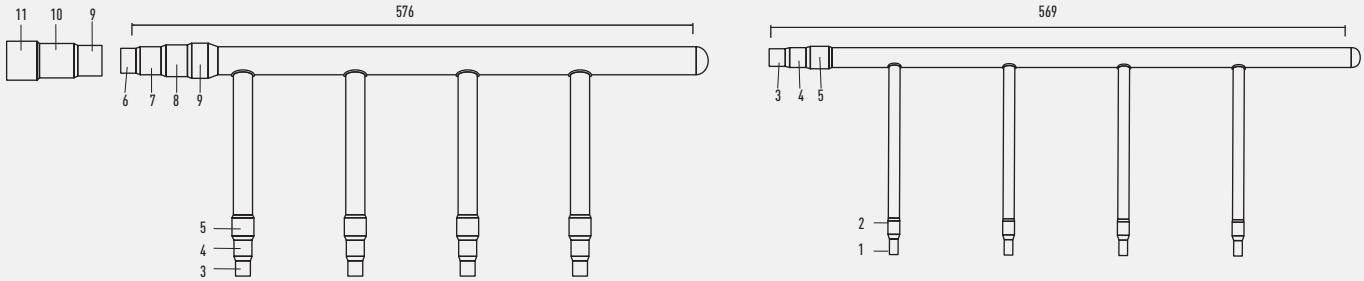

Header pipe set for ECOi 6N 3-Pipe system

CZ-P4HP3C2BM

Header pipe model for 3-Pipe systems.

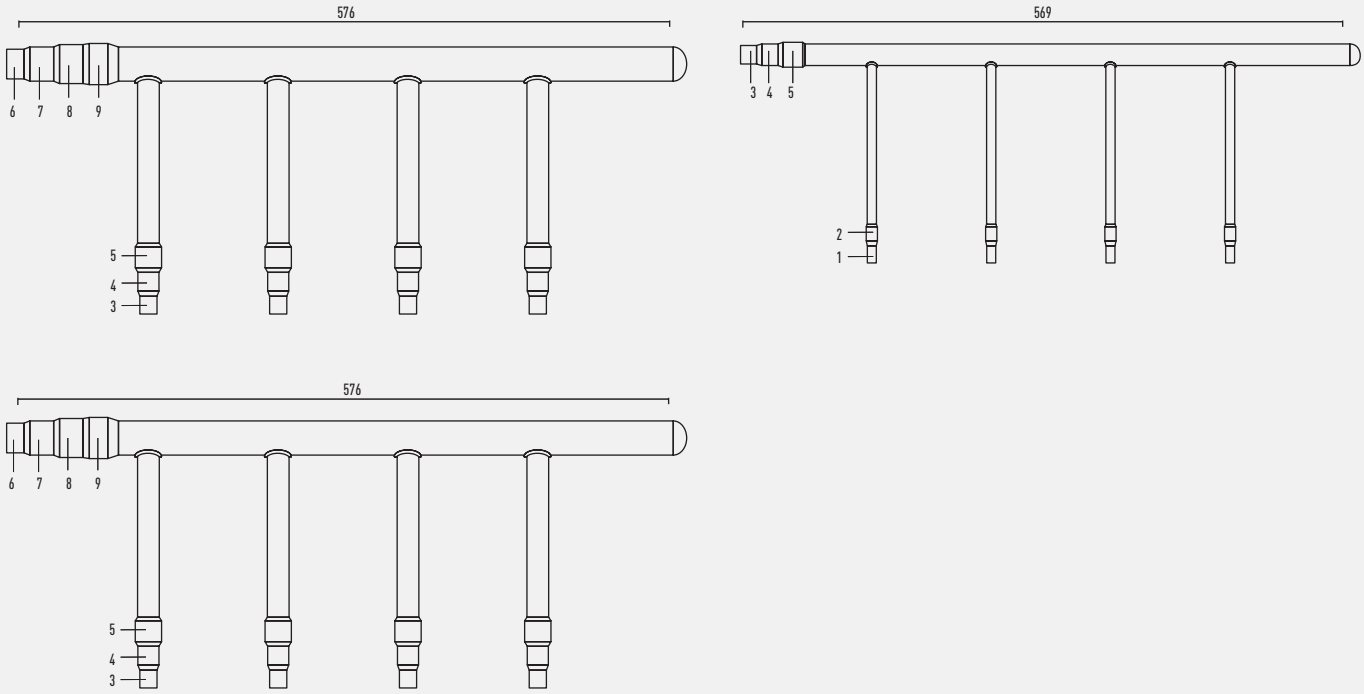

Diameters		Diameters		Diameters	
1	6,35 mm 1/4"	5	19,05 mm 3/4"	9	31,75 mm 1" 1/4
2	9,52 mm 3/8"	6	22,40 mm 7/8"	10	34,92 mm 1"3/8
3	12,70 mm 1/2"	7	25,40 mm 1"	11	38,10 mm 1"1/2
4	15,88 mm 5/8"	8	28,57 mm 1" 1/8		

Control equipment external dimensions

Control Systems

TIMER REMOTE CONTROLLER
(CZ-RTC2)

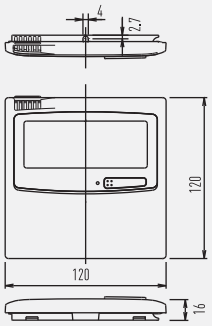

WIRELESS REMOTE CONTROLLER

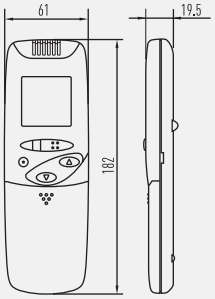

SEPARATE RECEIVER FOR WIRELESS REMOTE CONTROLLER

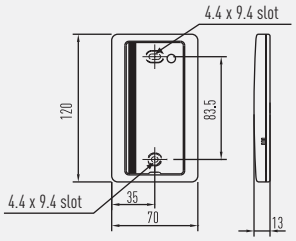

SIMPLIFIED REMOTE CONTROLLER
(CZ-RE2C2)

REMOTE SENSOR
(CZ-CSRC2)

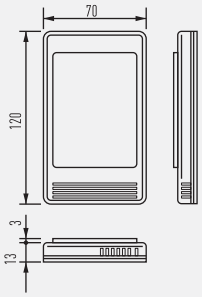

SYSTEM CONTROLLER
(CZ-64ESMC2)

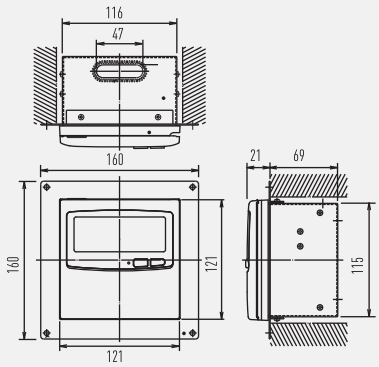

INTELLIGENT CONTROLLER
(CZ-256ESMC2)

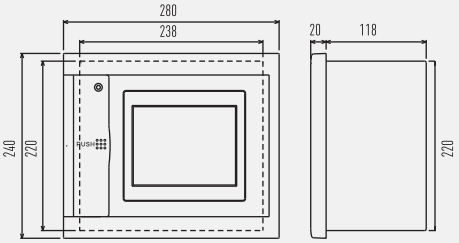

COMMUNICATION ADAPTER
(CZ-CFUNC2)

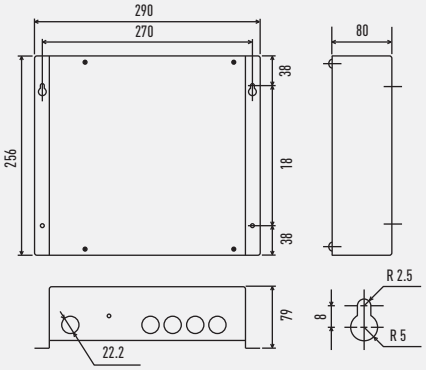

ON/OFF CONTROLLER
(CZ-ANC2)

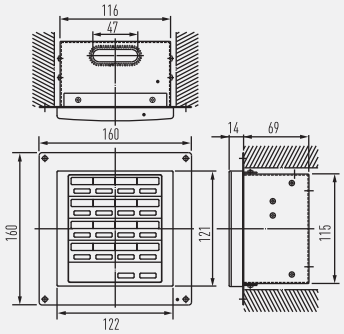

SERI-PARA I/O UNIT FOR EACH INDOOR UNIT
(CZ-CAPBC2)

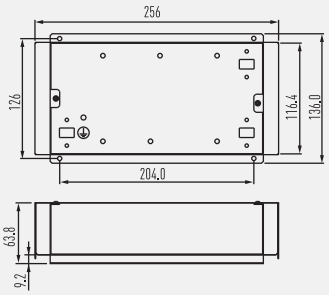

LONWORKS INTERFACE
(CZ-CLNC2)

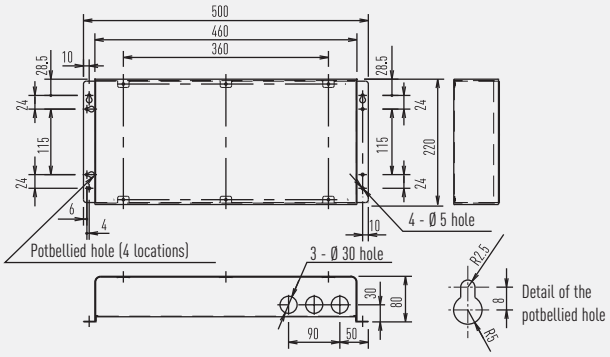

SERI-PARA I /O UNIT FOR OUTDOOR UNIT
(CZ-CAPDC2)

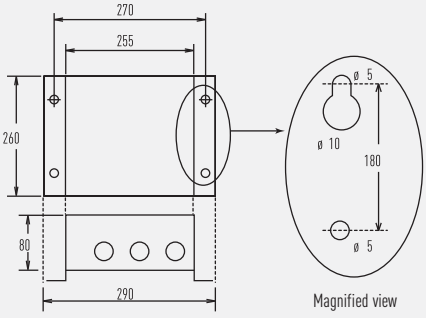

ECOi and ECO G indoor units dimensions

U1 Type // 4 Way 90x90 Cassette

Type		22-56	60-160
1	Air intake grill		
2	Air discharge outlet		
3	Refrigerant piping (liquid pipes)	Ø 6,35 (flared)	Ø 9,52 (flared)
4	Refrigerant piping (gas pipes)	Ø 12,7 (flared)	Ø 15,88 (flared)
5	Drain outlet VP50	Outer diameter 32mm	
6	Power supply port		
7	Discharge duct	Ø 150	
8	Suspension bolt hole	4-12x30 slot	
9	Fresh air intake duct connection port	Ø 100[1]	

1 Air inlet kit is necessary.
Filter size: 520 x 520 x 16

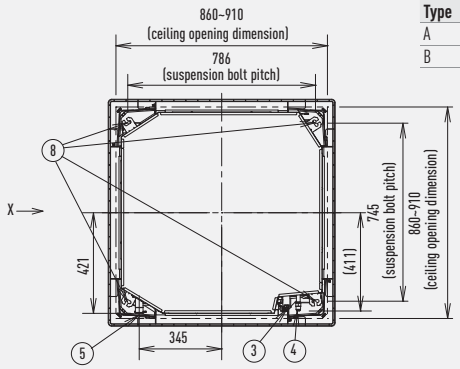

Type	22-90	106-160
A	256	319
B	124	187

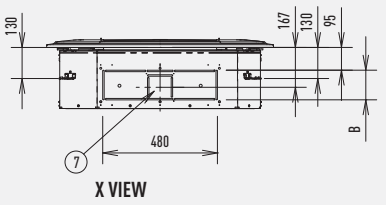

X VIEW

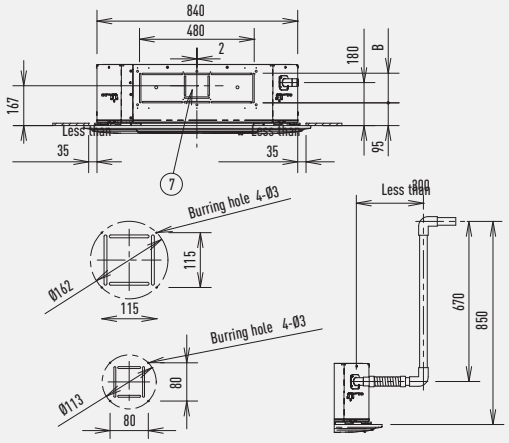

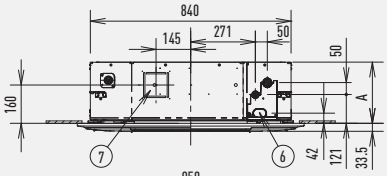

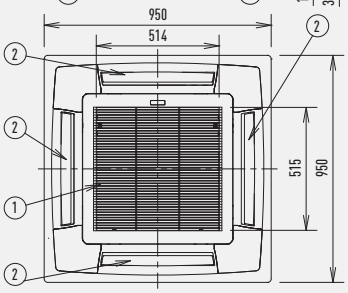

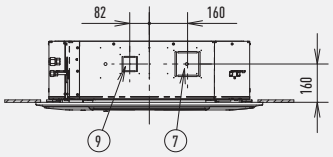

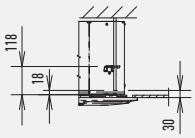

Adjust the suspension bolt length so that the gap from the lower ceiling surface becomes 30mm or more (18mm or more from the lower surface of the body) as shown in the figure. When the suspension bolt length is long, it hits the ceiling panel and installation is not possible.

Dimensions: mm

Y2 Type // 4 Way 60x60 Cassette

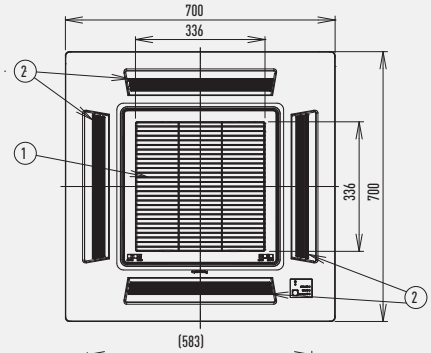

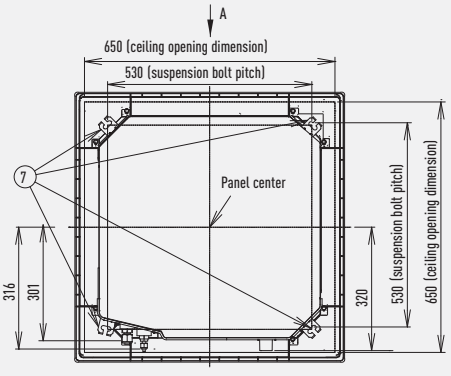

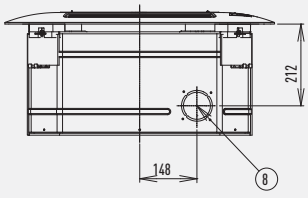

A VIEW

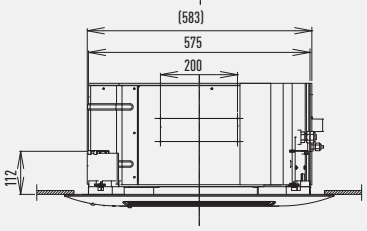

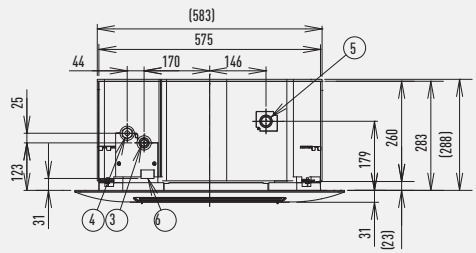

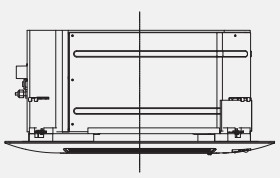

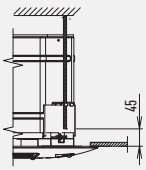

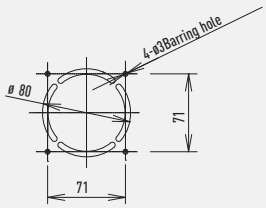

Dimension of Fresh air intake duct (field supply) connection port

1	Air intake	
2	Discharge outlet	
3	Refrigerant tubing (liquid tube)	Ø 6,35 (flared)
4	Refrigerant tubing (gas tube)	Ø 12,7 (flared)
5	Drain tube connection port VP25	Outer dia. Ø 32
6	Power supply port	
7	Suspension bolt hole	4-11 x 26 hole
8	Fresh air intake duct connection port	Ø 80

Adjust the suspension bolt length so that the gap from the lower ceiling surface becomes 45mm or more, as shown in the figure at right.
If the suspension bolts is too long, it will contact the ceiling panel and the unit cannot be installed.

Dimensions: mm

L1 Type // 2 Way Cassette

1	Refrigerant liquid line	Ø 9,52
2	Refrigerant gas line	Ø 15,88
3	Drain connection 25 A	Outer diameter 32mm
4	Power supply entry	

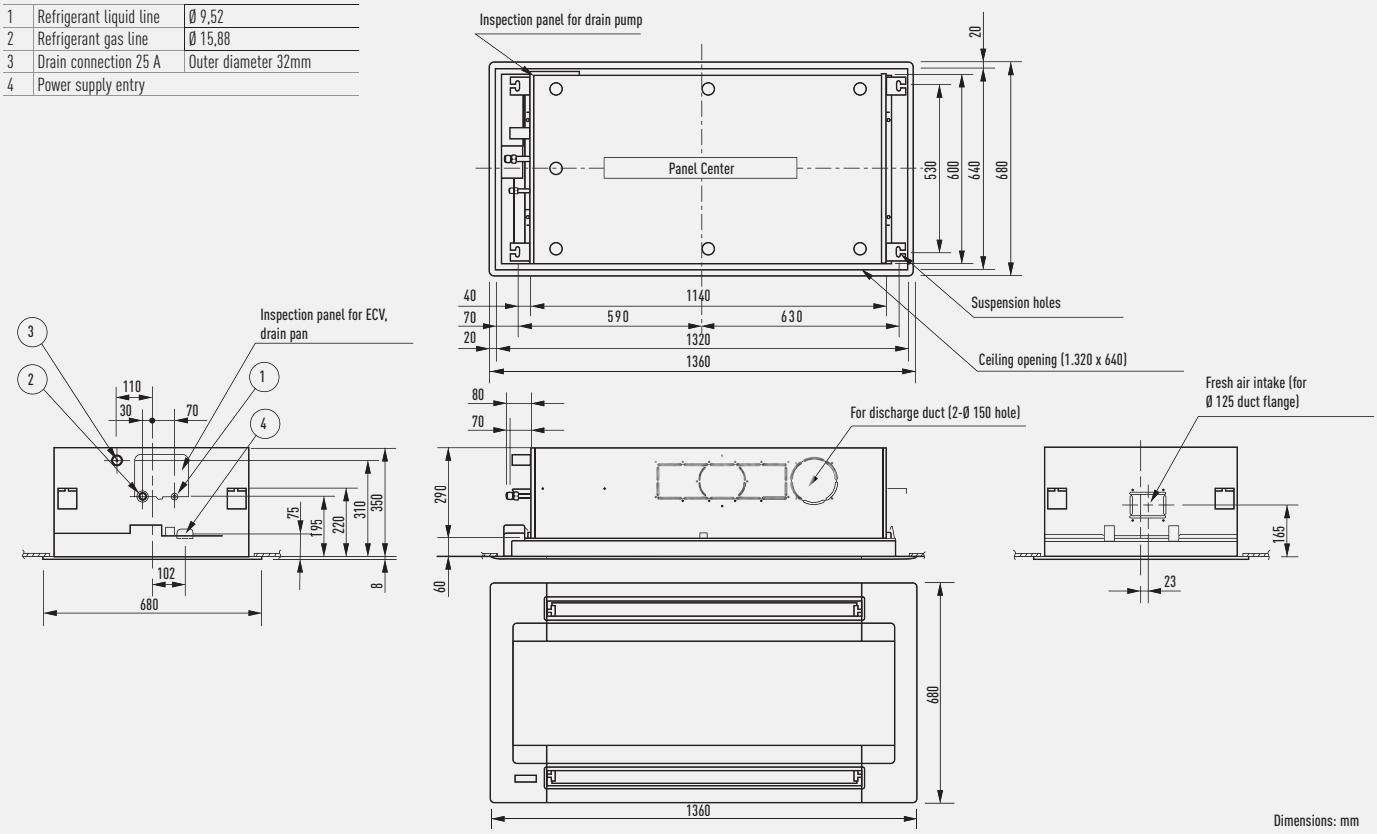

D1 Type // 1 Way Cassette

		28-56	73
1	Air intake grille		
2	Discharge outlet		
3	Refrigerant piping (liquid pipes)	Ø 6,35 (flared)	Ø 9,52 (flared)
4	Refrigerant piping (gas pipes)	Ø 12,7 (flared)	Ø 15,88 (flared)
5	Drain connection VP25	Outer diameter32	
6	Power supply entry		
7	Discharge duct connection port (for descending ceiling)		
8	Fresh air intake duct connection port	Ø 100	
9	Installation port for wireless remote controller receiver		
10	Suspension bolt hole	4-12 30 hole	

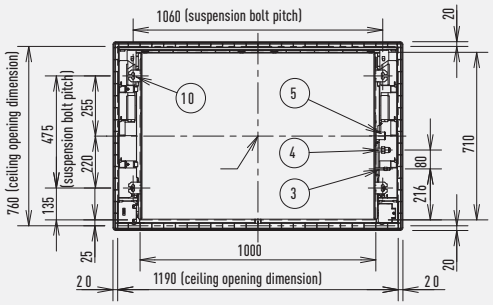

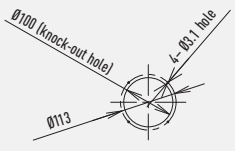

Fresh air intake duct connection port (detail)

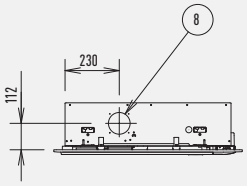

Required space for installation

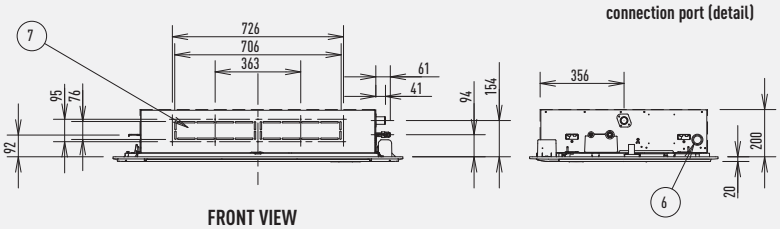

FRONT VIEW

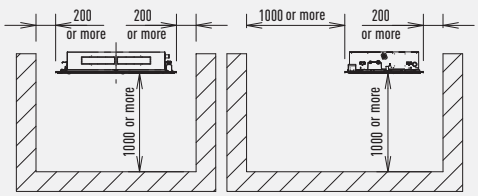

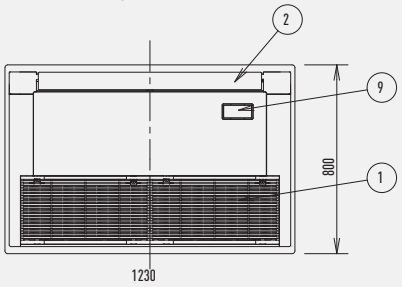

Dimensions: mm

ECOi and ECO G indoor units dimensions

F2 Type // Variable Static Pressure Hide Away

S-15MF2E5A // S-22MF2E5A // S-28MF2E5A // S-36MF2E5A // S-45MF2E5A // S-56MF2E5A

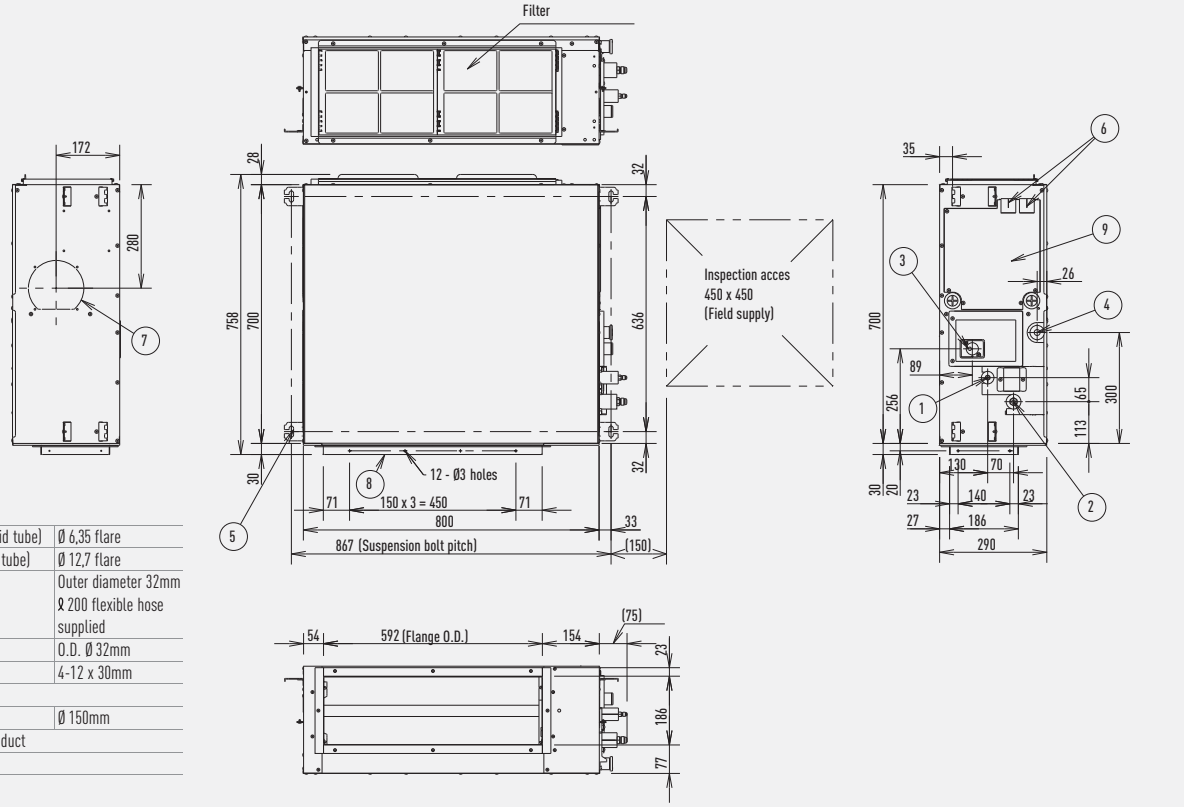

1	Refrigerant tubing joint (liquid tube)	Ø 6,35 flare
2	Refrigerant tubing joint (gas tube)	Ø 12,7 flare
3	Upper drain port VP25	Outer diameter 32mm ℓ 200 flexible hose supplied
4	Bottom drain port VP 25	O.D. Ø 32mm
5	Suspension lug	4-12 x 30mm
6	Power supply outlet	
7	Fresh air intake port	Ø 150mm
8	Flange for flexible air outlet duct	
9	Electrical component box	

S-60MF2E5A // S-73MF2E5A // S-90MF2E5A

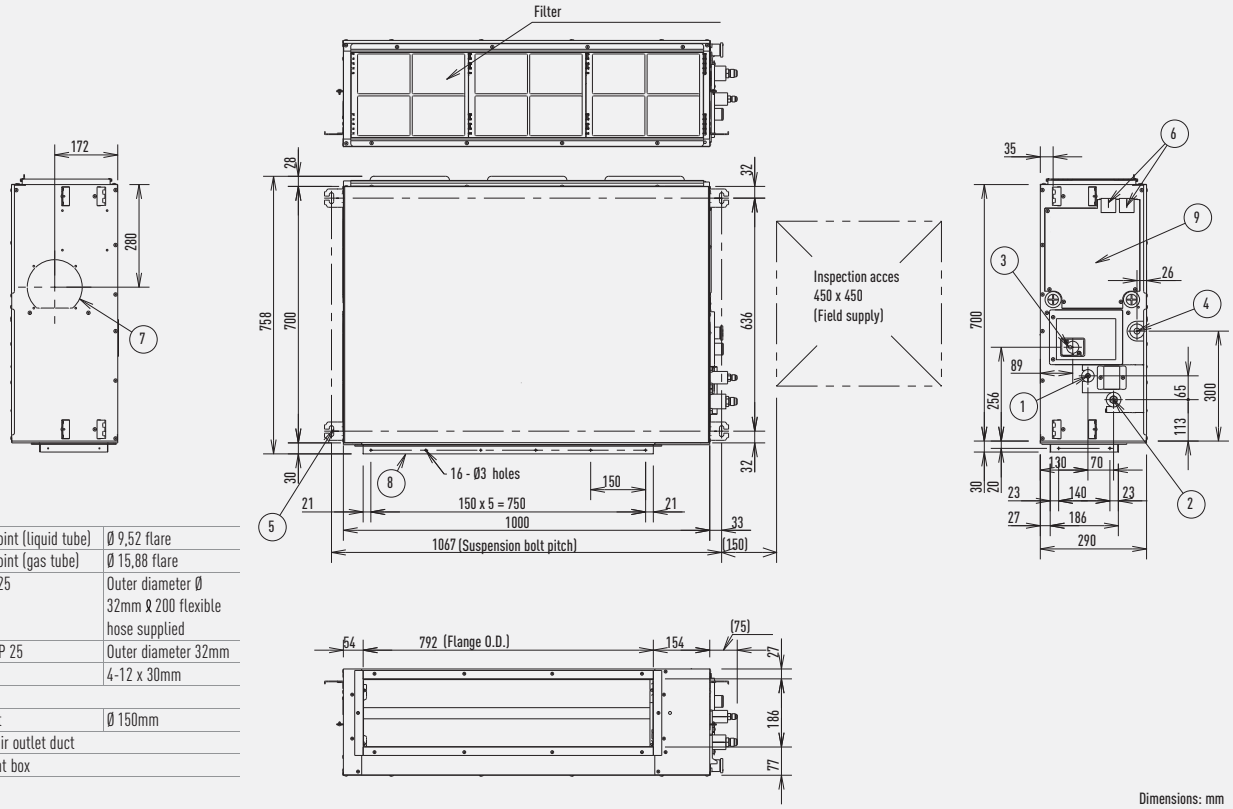

1	Refrigerant tubing joint (liquid tube)	Ø 9,52 flare
2	Refrigerant tubing joint (gas tube)	Ø 15,88 flare
3	Upper drain port VP25	Outer diameter Ø 32mm ℓ 200 flexible hose supplied
4	Bottom drain port VP 25	Outer diameter 32mm
5	Suspension lug	4-12 x 30mm
6	Power supply outlet	
7	Fresh air intake port	Ø 150mm
8	Flange for flexible air outlet duct	
9	Electrical component box	

Dimensions: mm

S-106MF2E5A // S-140MF2E5A // S-160MF2E5A

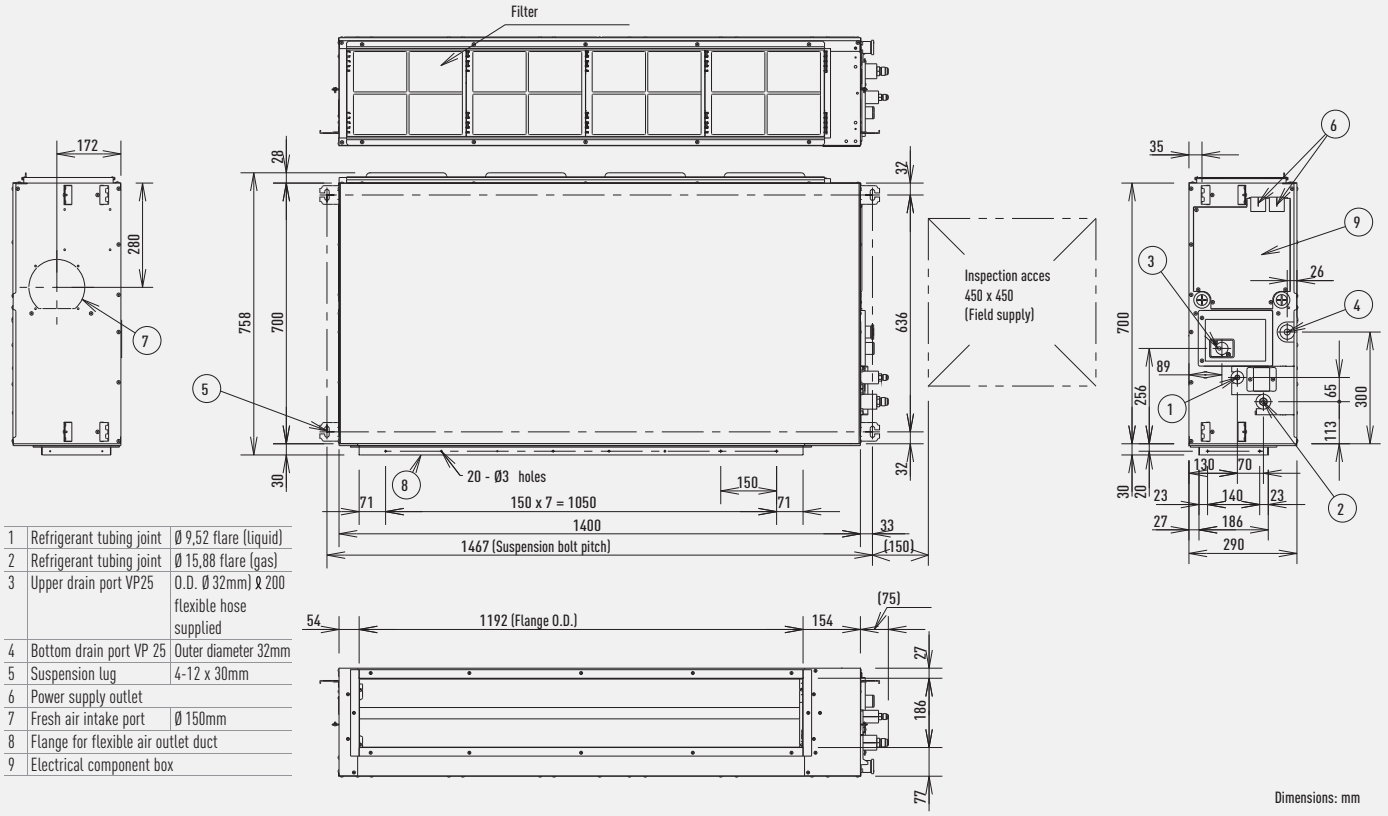

1	Refrigerant tubing joint	Ø 9,52 flare (liquid)
2	Refrigerant tubing joint	Ø 15,88 flare (gas)
3	Upper drain port VP25	O.D. Ø 32mm) & 200 flexible hose supplied
4	Bottom drain port VP 25	Outer diameter 32mm
5	Suspension lug	4-12 x 30mm
6	Power supply outlet	
7	Fresh air intake port	Ø 150mm
8	Flange for flexible air outlet duct	
9	Electrical component box	

Dimensions: mm

M1 Type // Slim Variable Static Pressure Hide Away

1	Refrigerant tubing joint (narrow tube)	
2	Refrigerant tubing joint (wide tube)	
3	Upper and bottom drain port	Outer diameter 26mm
4	Suspension lug	
5	Power supply outlet	2- Ø 30
6	Flange for air intake duct	
7	PL cover	
8	Electrical component box	
9	Frame filter	
10	Signal output board	ACC-SG-AGB: optional

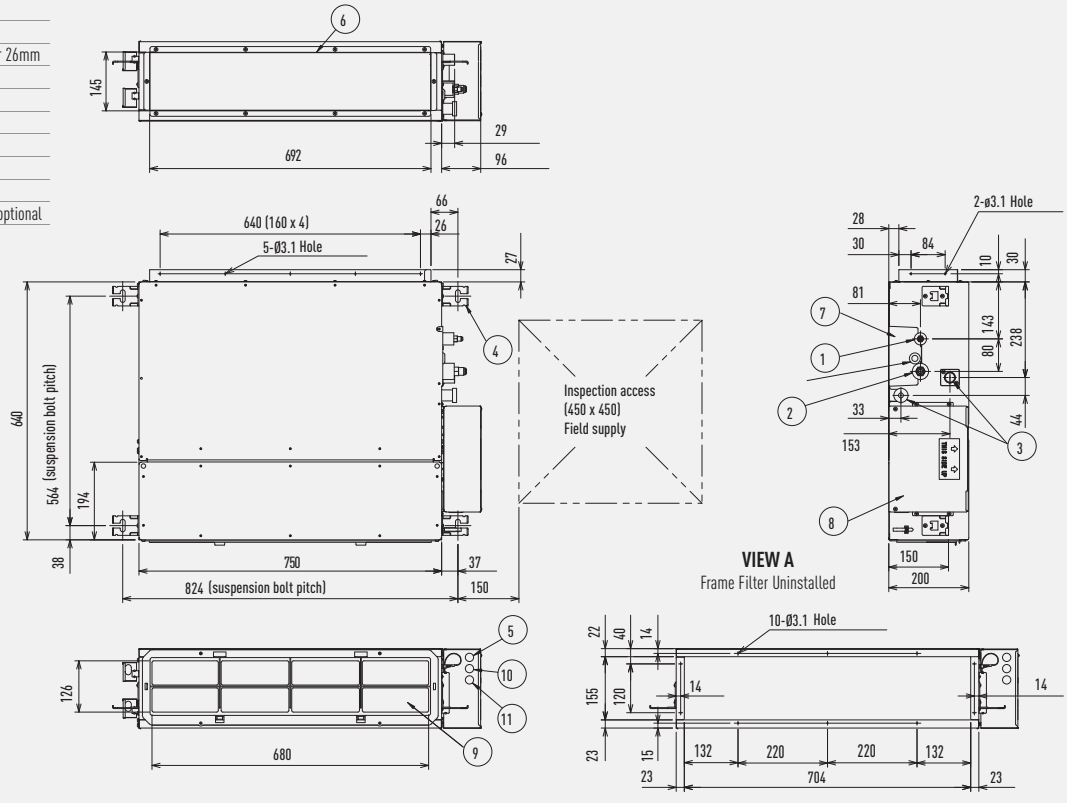

Dimensions: mm

ECOi and ECO G indoor units dimensions

E2 Type // High Static Pressure Hide Away

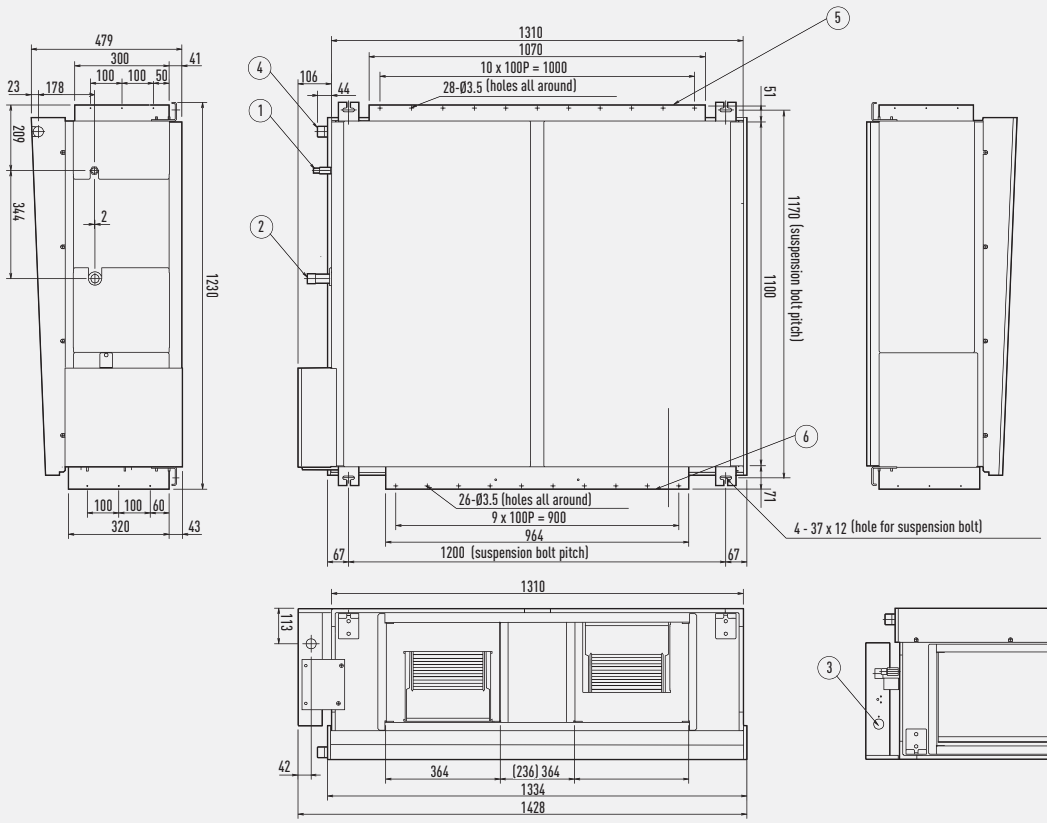

		224	280
1	Refrigerant liquid line	Ø 9,52	
2	Refrigerant gas line	Ø 19,05	Ø 22,22
3	Power supply outlet		
4	Drain port	Outer diameter 32 mm	
5	Duct connection for suction		
6	Duct connection for discharge		

Dimensions: mm

Heat Recovery with DXCoil

	A	A1	A2	B	B1	B2	C	D	D1	Ø d	E
PAW-500ZDX2	1470	1410	1630	997	1053	1112	312	728	497	200	38
PAW-800ZDX2	1822	1752	1986	882	936	994	390	431	431	250	169
PAW-01KZDX2	1822	1752	1986	1132	1186	1244	390	681	532	250	169

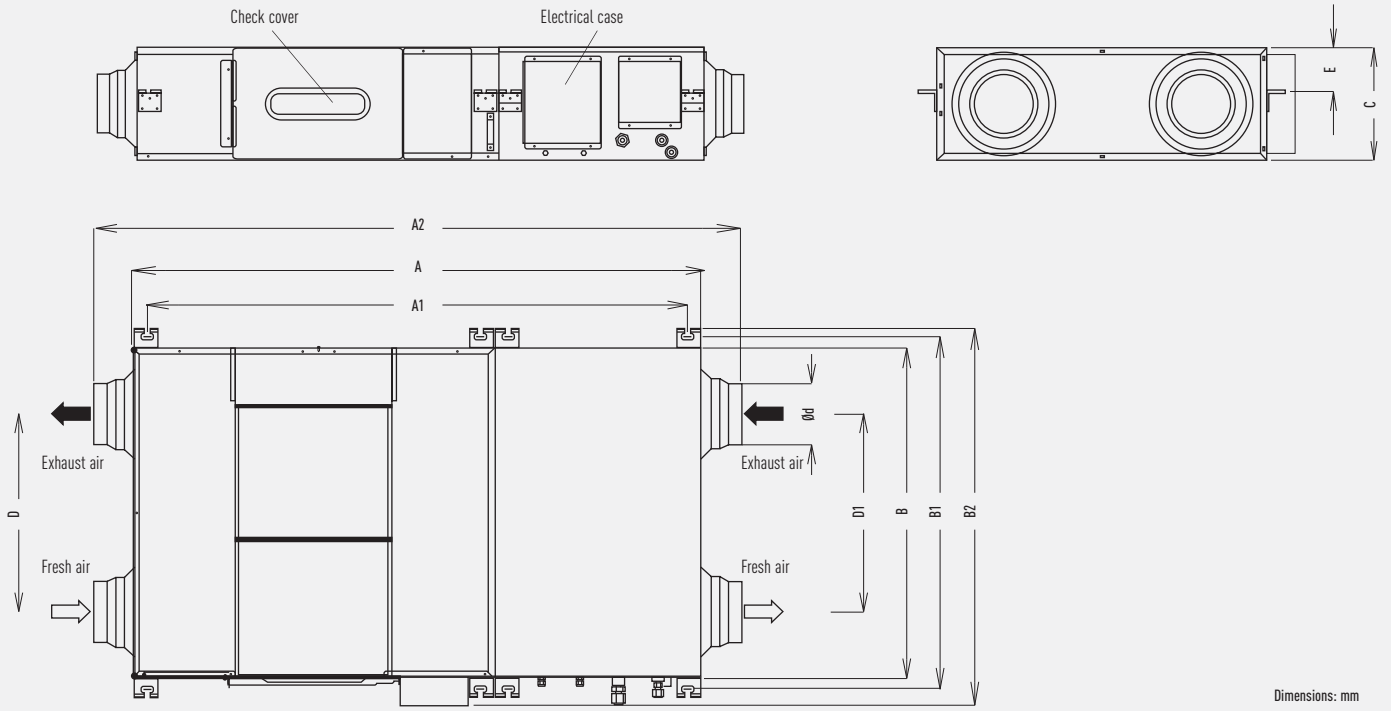

Dimensions: mm

T2 Type // Ceiling

S-36MT2E5A // S-45MT2E5A // S-56MT2E5A

1	Drain port VP20	Inside diameter ø26mm, drain hose supplied
2	Left drain position	
3	Refrigerant liquid tubing	Ø9,52mm, flare connection
4	Refrigerant gas tubing	Ø15,88mm, flare connection
5	Left side drain hose outlet port (cutout)	
6	Tubing hole on wall surface	Ø100mm
7	Upper side tubing port	
8	Right side drain hose outlet port (cutout)	
9	Wireless remote controller receiver installation location	

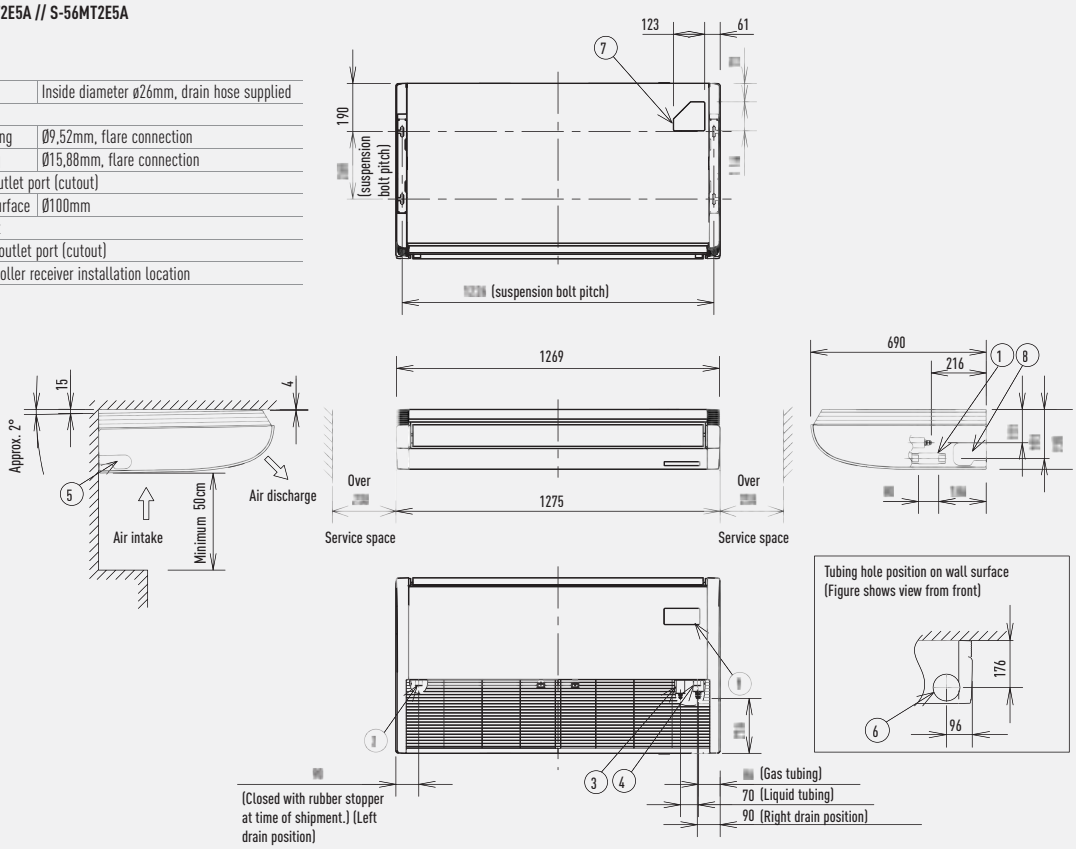

S-73MT2E5A // S-106MT2E5A // S-140MT2E5A

	A	B	C	D	E
106-140 type	1.590	235	690	1.584	1.541
140 type	1.275	235	690	1.269	1.226

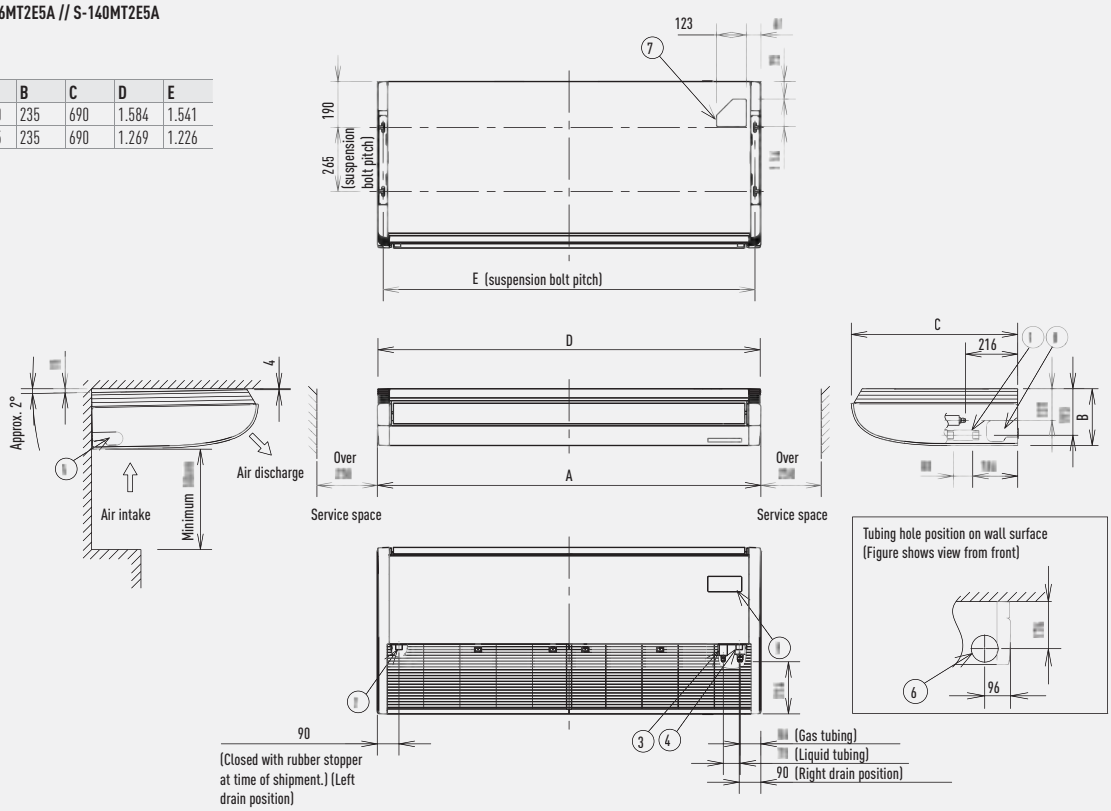

Dimensions: mm

ECOi and ECO G indoor units dimensions

K2/K1 Type // Wall Mounted

S-15MK2E5A / S-22MK2E5A / S-28MK2E5A / S-36MK2E5A

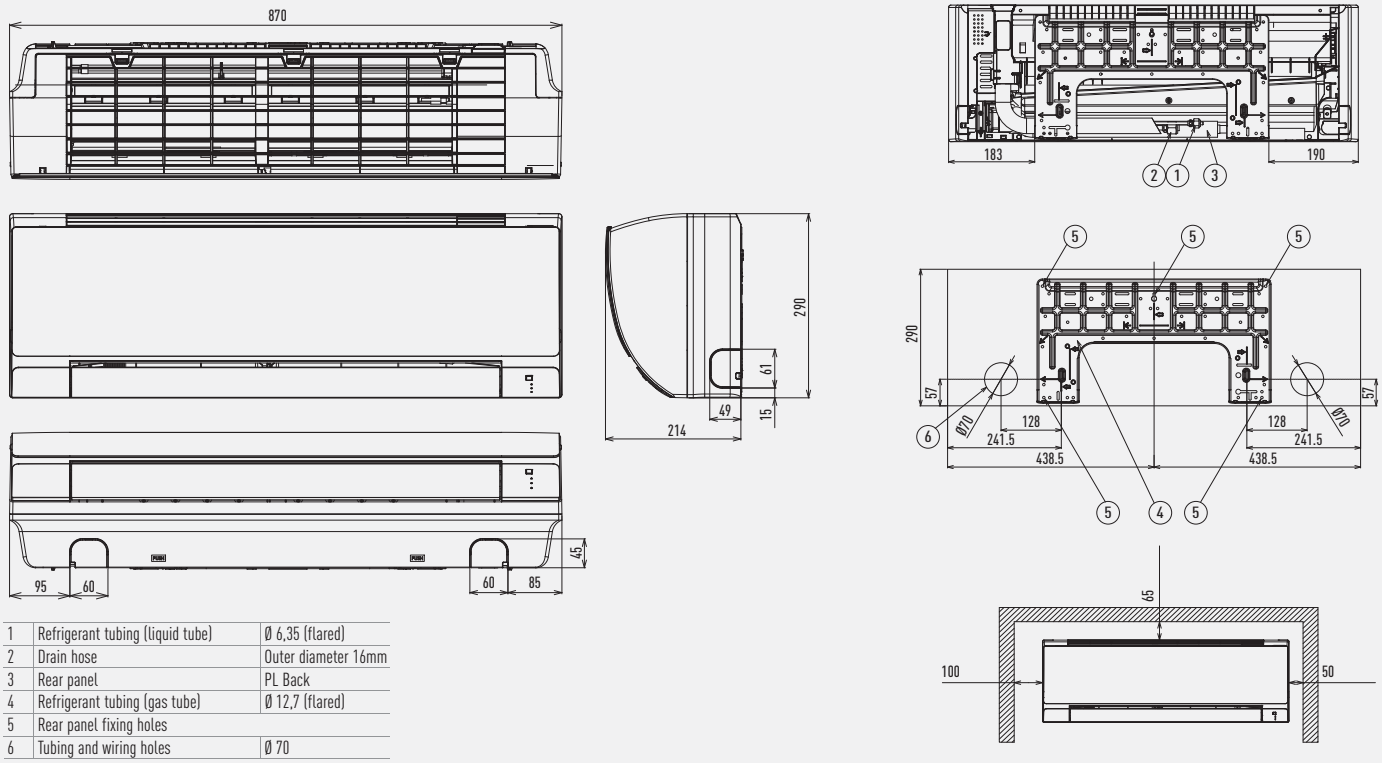

1	Refrigerant tubing (liquid tube)	Ø 6,35 (flared)
2	Drain hose	Outer diameter 16mm
3	Rear panel	PL Back
4	Refrigerant tubing (gas tube)	Ø 12,7 (flared)
5	Rear panel fixing holes	
6	Tubing and wiring holes	Ø 70

S-45MK1E5A / S-56MK1EA5 / S-73MK1E5A / S-106MK1E5A

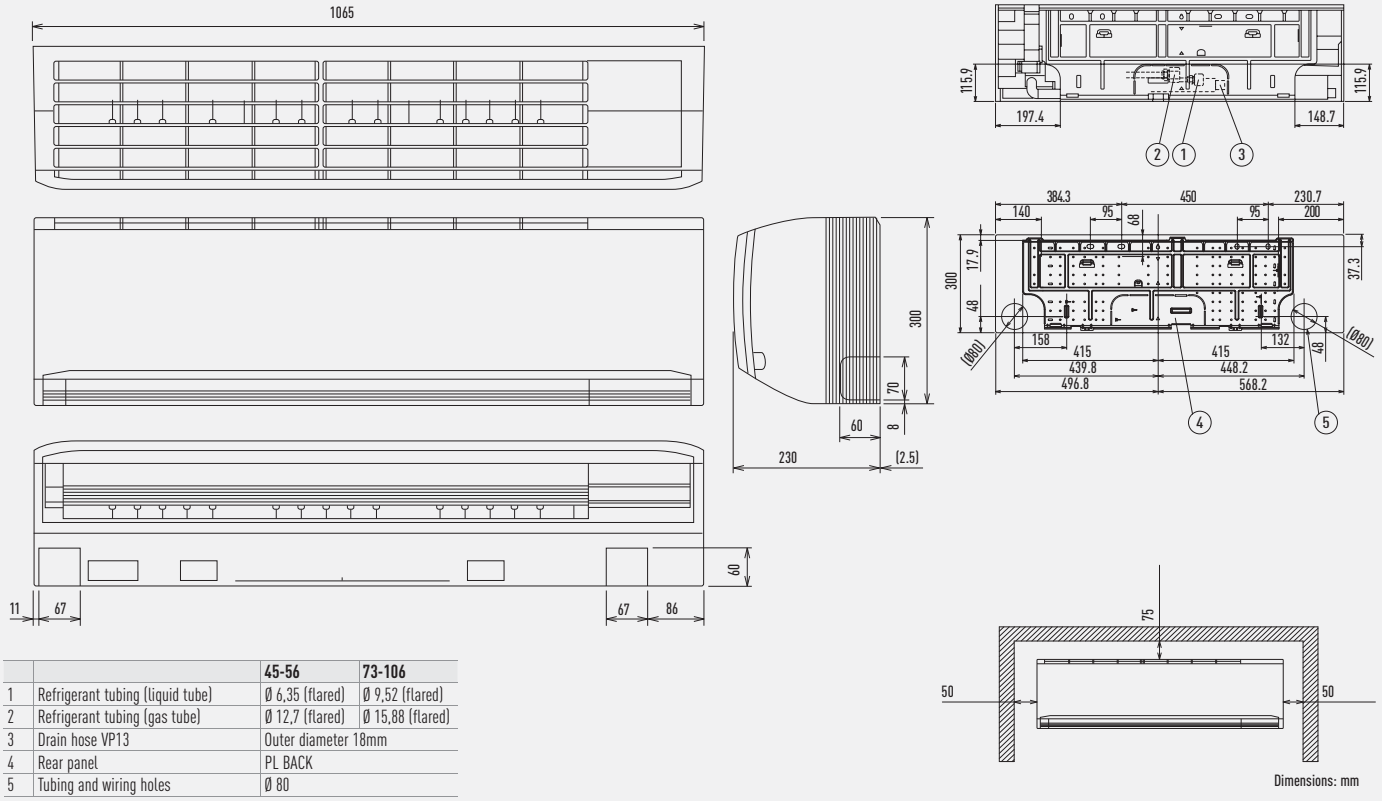

		45-56	73-106
1	Refrigerant tubing (liquid tube)	Ø 6,35 (flared)	Ø 9,52 (flared)
2	Refrigerant tubing (gas tube)	Ø 12,7 (flared)	Ø 15,88 (flared)
3	Drain hose VP13	Outer diameter 18mm	
4	Rear panel	PL BACK	
5	Tubing and wiring holes	Ø 80	

Dimensions: mm

P1 Type // Floor Standing

1	4-Ø 12 hole (For fastening the indoor unit to the floor with screws.)
2	Air filter
3	Refrigerant connection outlet (liquid tube)
4	Refrigerant connection outlet (gas tube)
5	Level adjusting bolt
6	Drain outlet (20 A)
7	Power cord outlet (downward, rear)
8	Refrigerant tubing outlet (downward, rear)
9	Location for mounting the remote controller (Remote controller can be attached within the room.)

	A	B	C	Liquid pipes	Gas pipes
22-36	1065	665	632	Ø 6,35	Ø 12,7
45	1380	980	947		
56					
71				Ø 9,52	Ø 15,88

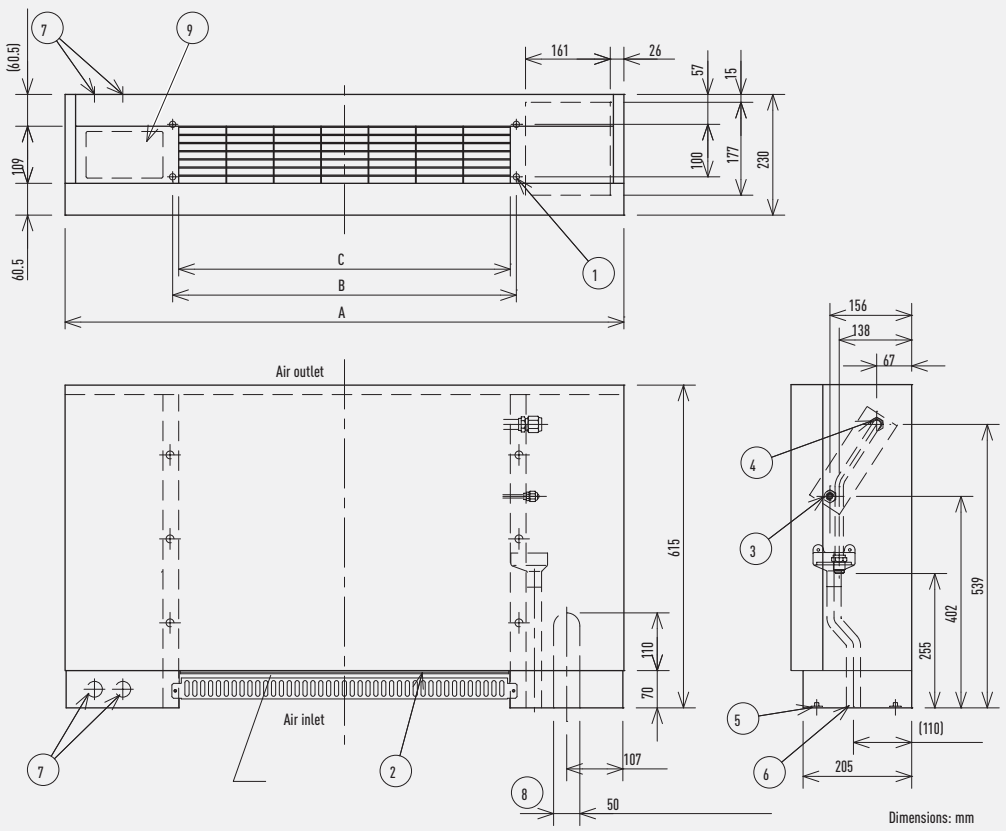

Dimensions: mm

R1 Type // Concealed Floor Standing

1	4-ø12 hole (For fastening the indoor unit to the floor with screws.)
2	Air filter
3	Refrigerant connection outlet (liquid tube)
4	Refrigerant connection outlet (gas tube)
5	Level adjusting bolt
6	Drain outlet (20 A)
7	Flange for the air-outlet duct

	A	B	C	D	E	F	Liquid pipes	Gas pipes
22-36	904	692	672	665	500	86	Ø 6,35	Ø 12,7
45	1,219	1,007	1,002	980	900	51		
56								
71							Ø 9,52	Ø 15,88

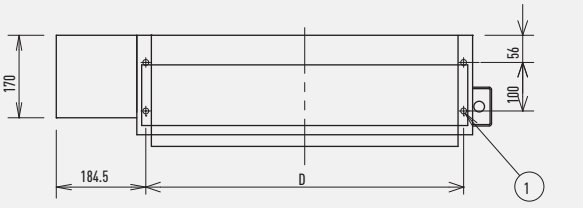

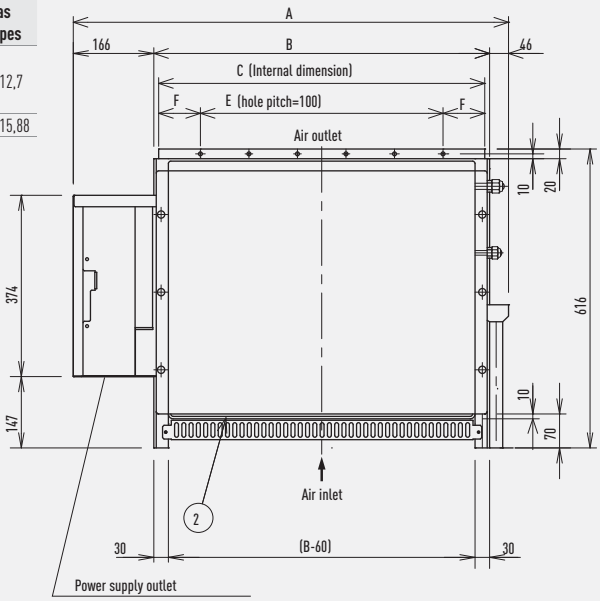

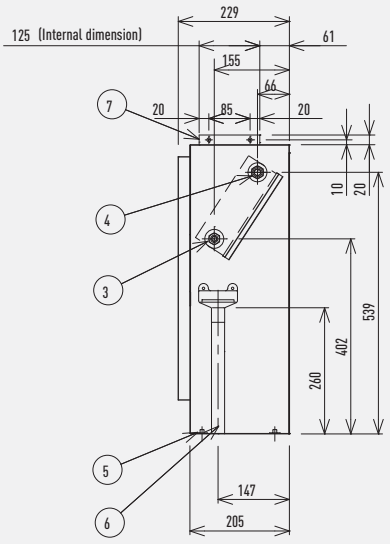

Dimensions: mm

Energy saving
INVERTER+

Inverter+ products improve on the characteristics of standard Inverter range by over 20%. A Inverter plus is also A class on cooling and heating mode.

Maximum flexibility
VRF

VRF. The Inverter plus range provides greater efficiency,

Down to -20 °C in heating mode
OUTDOOR TEMPERATURE

The ECOi system works in heating mode at outdoor temperatures down to -25°C (2-Pipe series) or -20°C (3-Pipe series and Mini ECOi).

Easy control by BMS
CONNECTIVITY

The communication port is integrated into the indoor unit and provides easy connection to, and control of, your Panasonic heat pump to your home or building management system.

Environmentally friendly refrigerant
R410A

R410A. Environmentally friendly refrigerant.

5 year compressor warranty

5 Years warranty.
We guarantee the compressors in the entire range for five years.



FS Multi VRF Systems

The FS Multi VRF lineup is a full Electrical VRF line up specially designed for small to medium installations. Easy to install units. No additional gas needed (for 5 and 6 HP). Indoor units match Etherea wall mounted designs. Self diagnostic function with 7-digit code for easy set up and repair. Example applications: Apartments. Bungalows. Offices. Shops & Restaurants.



PANASONIC INDUSTRIAL FS MULTI VRF SYSTEM

Professional solutions for all types of projects

The Panasonic FS Multi VRF system is specifically designed for energy saving, easy installation and high efficiency performance.



Maximum flexibility

VRF

FS MULTI



FS Multi VRF from Panasonic

Easy to install VRF, specially designed for homes and small commercial buildings: large lineup of indoor units, Etherea wall mounted design, 5-6-8-10 HP outdoor units, Single Phase and Three Phase.
FS Multi VRF's cutting edge VRF technology is perfectly suited to medium-sized or small areas, with Single Phase power sources, together with advanced Inverter technology, opening up previously unimagined possibilities in the world of air conditioning.
Air conditioning spaces can now take on a new dimension. If you have bought a new property, home, office or commercial place which is still in the construction phase, or if you are refurbishing, Panasonic offers you the chance to enjoy FS Multi VRF air conditioning.

U-5LA1E5 // U-6LA1E5
For homes and multi-storey apartments.
Enabling air conditioning in multiple rooms with a single outdoor unit.

U-8EA1E8 // U-10EA1E8
Offices, shops and boutiques. As well as being ideal for new buildings.

FS Multi VRF from Panasonic

- Total freedom of choice. Up to 30 different indoor models. Gives you the freedom to choose the best option depending on architectural needs and interior decor criteria.
- Two Single Phase outdoor unit ratings: 5 and 6 HP
- Two Three Phase outdoor unit ratings: 8 and 10 HP
- Inverter technology with R410A refrigerant, "greater comfort and economy with lower consumption".
- Greatest space reduction. A single outdoor unit feeds up to 16 indoor units (at 10 HP).
- Ease of installation. Thanks to the reduced dimensions of the outdoor unit it can be taken to the roof of the building in the lift.

Energy Saving Inverter

All the models of Panasonic FS Multi VRF series are equipped with DC inverter compressor for the higher EER operation. The new design, not only helps to achieve improved quiet and high-efficiency operation, but also reduces running costs.

Panasonic's Original High-Performance Compressor

It's the compressor at the heart of an air conditioner that determines reliability and efficiency. The FS Multi VRF features Panasonic's original high-performance compressor to ensure outstanding performance and quality.

High-Efficiency Compressor

Panasonic has achieved a more compact motor by using a powerful neodymium (rare-metal) magnet. Higher efficiencies are possible thanks to the smaller magnetic field distortion of the winding rotor motor.

Pump-Down Mode (5 and 6 HP)

The 5 and 6 HP FS Multi VRF outdoor units incorporate a pump-down mode, making it possible to drain all of the refrigerant from the installation (not just from the external unit). This facilitates improved installation and maintenance routines.

Refrigerant Charge-free System On the 5 and 6 HP

The FS Multi VRF is a refrigerant charge-free system that does not require a charge of additional refrigerant even when using a full pipe length of up to 90 m. This dramatically shortens the installation time required for charging with additional refrigerant, weight measurement and pressure judgment. It also eliminates charge amount calculation and there's less chance of a cooling capacity shortage due to an incorrect amount of refrigerant being used or other errors.

System advantages. Installation and maintenance flexibility

The FS Multi VRF system solves the air conditioning design and construction problems that arise due to pipes at different heights and the location of the installation site. Exceptional installation flexibility makes installation easy and maintains the attractive appearance of buildings.

Energy Saving

High quality features translate into savings thanks to great energy efficiency. This efficiency is due to the fact that each room is individually controlled and only the rooms that require air-conditioning are heated or cooled. Moreover, thanks to Inverter technology, the level of air conditioning can be adjusted precisely depending on each room's condition.

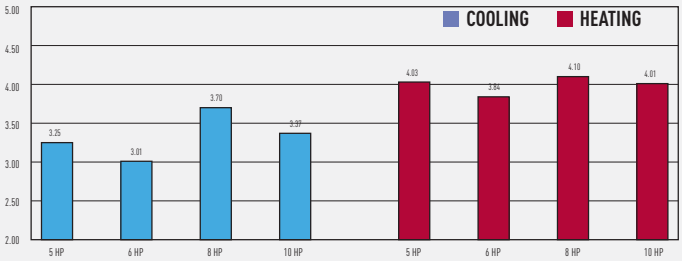

Broad Operating Range

The heating function will remain stable indoors even when the temperature outside drops to -15°C for 5/6 HP and to -20°C for 8/10 HP, thus meeting users different needs. Moreover, the cooling function operates from -5°C to 43°C.

5/6 HP

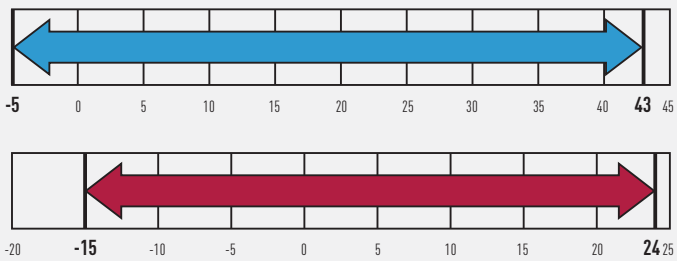

8/10 HP

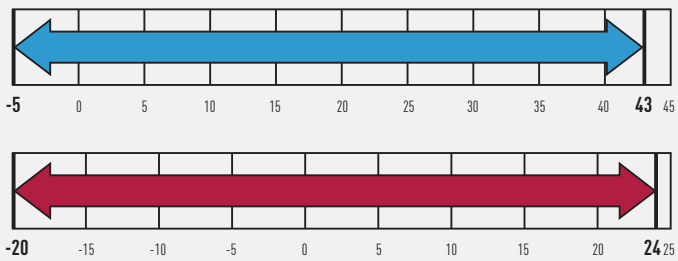

FS Multi Outdoor Units

U-5LA1E5 / U-6LA1E5



Pipes of up to 90m

The total length of the pipe between a system's indoor and outdoor units can be extended up to 90 metres, with a height difference of up to 30 metres. These ample limits make it possible to place the outdoor unit on the roof. The maximum height difference between indoor units in the same system may be up to 15 metres, thus covering 4 or 5 floors in the same system.

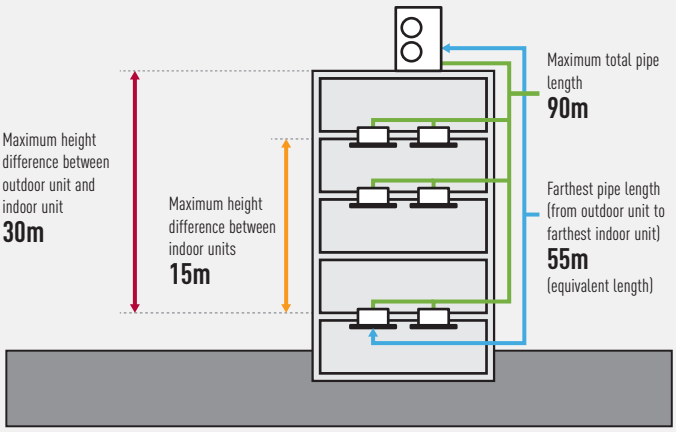

a) Maximum length from outdoor unit to farthest indoor unit (equivalent length): 55 m
b) Maximum length from first branch pipe to farthest indoor unit (equivalent length): 30 m
c) Maximum length of all main pipes: 40 m
d) Maximum length of all branch pipes: 50 m



Residences

Since a layout using long piping is possible, a single outdoor unit can be used even for multi-storey residences. And we offer a wide range of indoor unit designs to choose from to complement different interiors.



Multi-storey Apartments

Enabling air conditioning in multiple rooms with a single outdoor unit, the FS Multi VRF system offers an effective solution to today's demand for aesthetically pleasing buildings. The indoor units are also available in designs providing an ideal match for modern living environments.

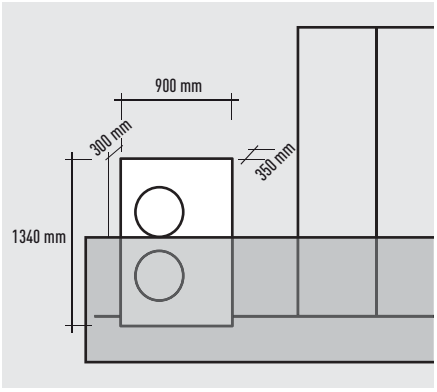

Space-Saving Design

Improvements to the design of the outdoor unit's fan has reduced the size of the unit to enable installation in a smaller space. Without sacrificing quietness, higher efficiency is also attained. Easy piping facilitates freedom in installation, and reduction in installation costs.

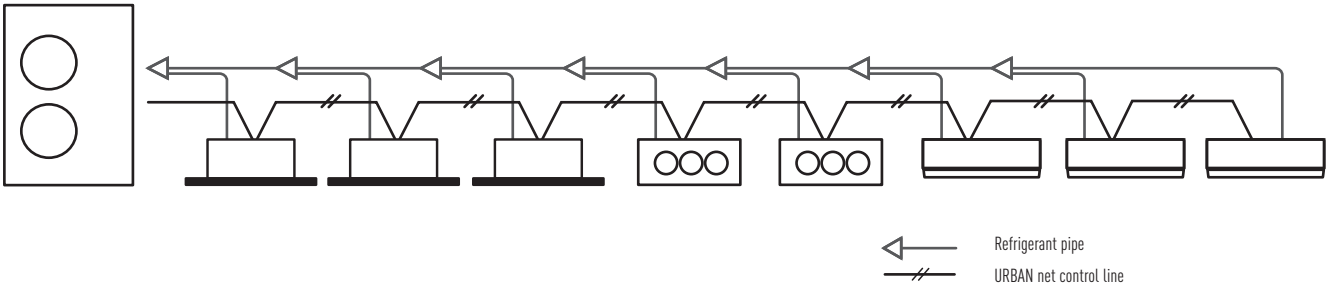

System / HP	5HP	6HP
Connectable Indoor Unit	8	8

FS Multi Outdoor Units

U-8EA1E8 / U-10EA1E8



Pipes of up to 300m

The total length of the pipe between a system's indoor and outdoor units can be extended up to 300m, with a height difference of up to 50m. These ample limits make it possible to place the outdoor unit on the roof. The maximum height difference between indoor units in the same system may be up to 15m, thus covering 4 or 5 floors in the same system.

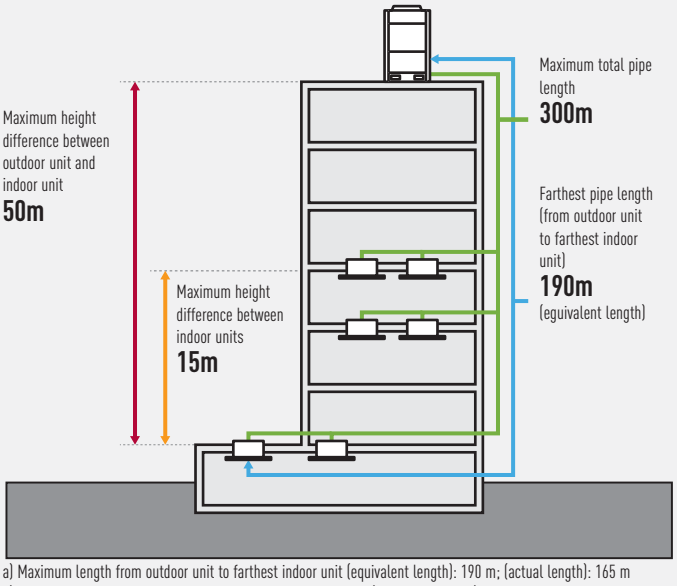

a) Maximum length from outdoor unit to farthest indoor unit (equivalent length): 190 m; (actual length): 165 m
b) Maximum length from first branch pipe to farthest indoor unit (equivalent length): 40 m
c) Maximum length of all main pipes: 135 m



Offices, Shops and Restaurants

As well as being ideal for new buildings, the FS Multi VRF system offers space-saving benefits when refurbishing and renovating existing spaces. What's more, independent air conditioning reduces energy wasted in unused offices, and much neater pipe layout is possible than with a single split system. Using the Weekly Timer also enables setting for the optimum Energy saving operation in offices and commercial facilities. And there are options enabling demand control and digital connection compatibility to meet the needs of business applications.

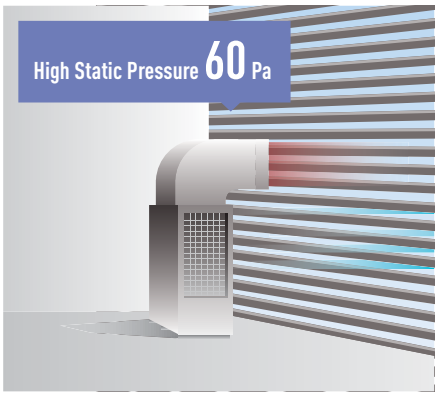

High External Static Pressure Mode

8 and 10 HP outdoor unit features a high external static pressure mode (up to 60 Pa). Select via the outdoor unit's local setting mode.

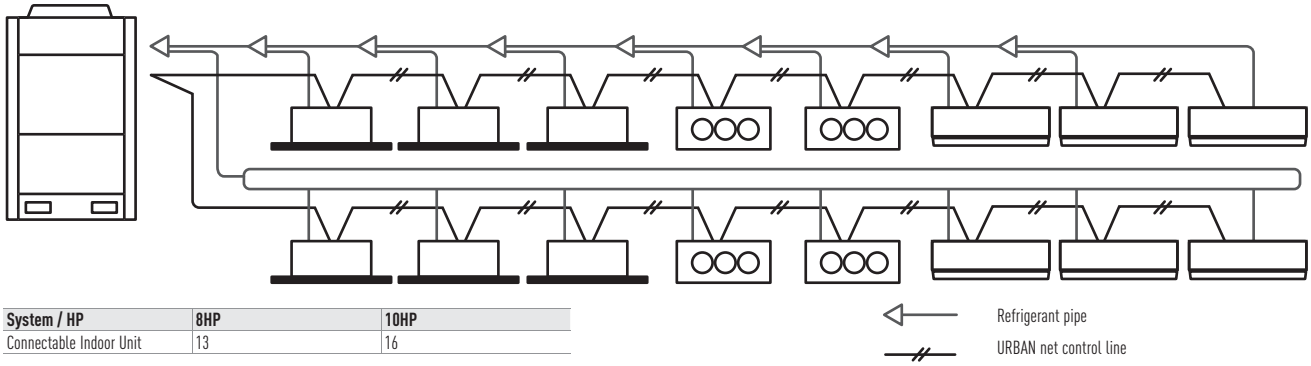

System / HP	8HP	10HP
Connectable Indoor Unit	13	16

FS Multi Outdoor Units

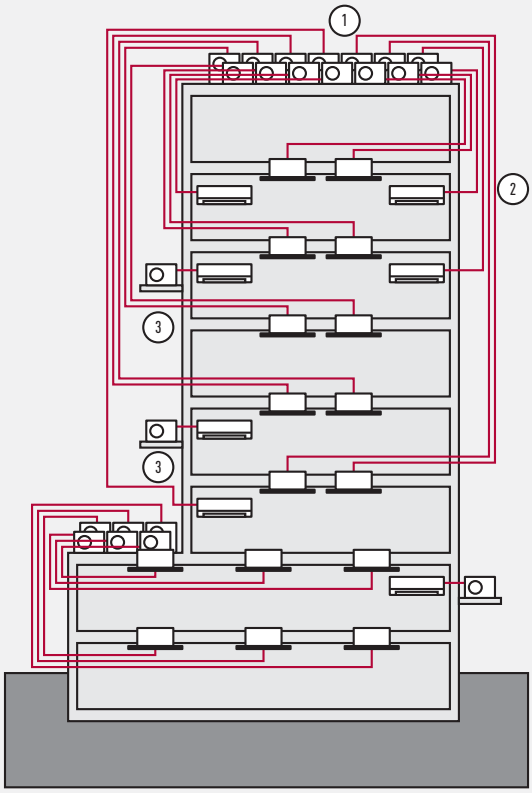

Frequent Single Split System Problems

1. Requires many outdoor units and large installation space.
   Thus, spoiling the building's appearance, and the building's strength must be assessed.
2. Requires many pipe shafts.
3. Pipes are short so outdoor units have to be installed on wall surfaces.
   Insufficient pipe length makes installation impossible.

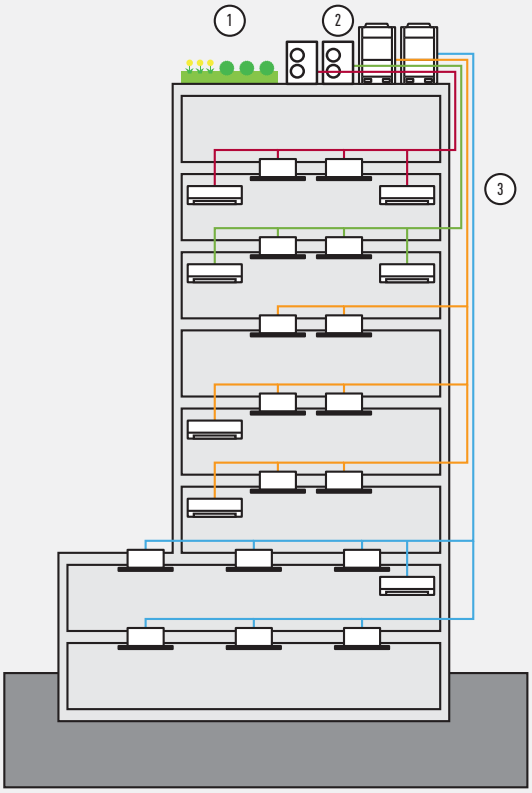

FS Multi VRF System Solution

1. Minimized number of outdoor units thanks to multi system. Rooftop space can be used more effectively and the unit load on the roof is considerably reduced.
2. Outdoor units can be installed close to each other, maintaining the building's appearance and enhancing the installation flexibility.
3. The number of pipings is reduced, thus minimising the space required in pipe shafts.

When installation space is limited

A single compact FS Multi VRF system outdoor unit enables air conditioning in multiple rooms, solving the problems of narrow or limited installation space.

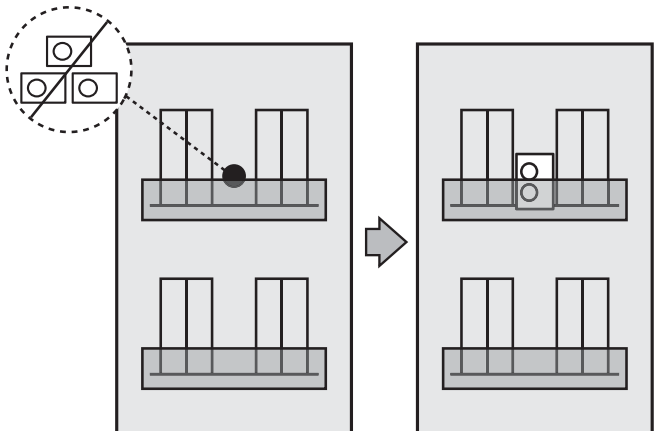

SINGLE SPLIT FS MULTI VRF

Cooling Only Model Setting

- The unit designed for cooling only can be set by the JP wire on the outdoor unit PC board.
- After setting this mode, the FS Multi VRF system cools only.

Outdoor Unit Silent Operation Mode

The Silent Operation mode of the outdoor unit can be selected by remote control. There are three mode settings that reduce the noise level by up to 6 dB(A). (When the Silent Operation mode is selected, cooling and heating capacity are reduced.)

Quiet Operation

A host of silencing technologies achieve super-quiet operation. We've also improved operating efficiency and reduced energy consumption.



Noise-Suppressing Winglet Fan

Energy saving

1. Hyper Wave Inverter
The series quickly warms the room up to the set temperature and maintains it within the comfort zone while ensuring energy efficiency and savings.
2. DC Inverter Compressor
A powerful neodymium magnet helps make the motor more compact.
3. Large Diagonal Air Flow Fan


DC Inverter Compressor



Easy maintenance
When there is a breakdown in an indoor unit, the system continues to work without this indoor unit. The outdoor unit does not stop, and the rest of the indoor units continue to operate.

Innovative and perfect control of loading for the 5 and 6 HP
The outdoor unit controls and optimises the loading of refrigerant in the system by asking each indoor unit its requirements. With this very innovative loading control, the system is highly efficient and the indoor unit responds very quickly to demands.

Combination Table

The FS Multi VRF system attains maximum indoor unit connection capacity of up to 130% in the units connection range, depending on the outdoor and indoor models selected. In the case of a 6 HP outdoor unit (15,5 kW, connection is possible with a maximum indoor unit range of 20,15 kW. So for a reasonable investment, the FS Multi VRF system provides an ideal air conditioning solution for locations where full cooling/heating is not always required.

Combination Table

Reference	Outdoor unit System cooling capacity	Maximum indoor unit	Standard combination capacity*	Maximum combination capacity	Minimum combination capacity
U-5LA1E5	5 HP/ 14,0 kW	8	14,0 kW	18,20 kW	7,0 kW
U-6LA1E5	6 HP/ 15,5 kW	8	15,5 kW	20,15 kW	7,75 kW
U-8EA1E8	8 HP/ 22,4 kW	13	22,4 kW	29,12 kW	11,2 kW
U-10EA1E8	10 HP/ 28,0 kW	16	28,0 kW	36,4 kW	14,0 kW
			100%	130%	50%

*Standard combination capacity is the system's maximum cooling capacity.

Combination Example

Correct

	Reference	Quantity	Capacity	Min. combination capacity	Max. combination capacity
Outdoor	U-6LA1E5	1	15,5 kW*	7,75 kW	20,15 kW
Indoor	S-22KA1E5	1	2,2 kW	-	-
	S-36KA1E5	2	(3,6 x 2) 7,2 kW	-	-
	S-22NA1E5	1	2,2 kW	-	-
	S-28NA1E5	3	(2,8 x 3) 8,4 kW	-	-
Total indoor capacity		7	20,0 kW (129%)		

Incorrect

	Reference	Quantity	Capacity	Min. combination capacity	Max. combination capacity
Outdoor	U-6LA1E5	1	15,5 kW*	7,75 kW	20,15 kW
Indoor	S-22KA1E5	1	2,2 kW	-	-
	S-36KA1E5	2	(3,6 x 2) 7,2 kW	-	-
	S-45KA1E5	1	4,5 kW	-	-
	S-22NA1E5	1	2,2 kW	-	-
	S-28NA1E5	3	(2,8 x 3) 8,4 kW		
Total indoor capacity		8	24,5 kW (158%)		

*Standard combination capacity is the system's maximum cooling capacity.

FS Multi Connectivity. Increased flexibility for integration into your projects



Great flexibility for integration into your KNX / Modbus / EnOcean / IntesisHome projects allows fully bi-directional monitoring and control of all the functioning parameters.
Panasonic Partners have designed solutions specifically for Panasonic air conditioners, and provide complete monitoring, control and full functionality of the entire FS Multi line-up from KNX / Modbus / EnOcean / IntesisHome installations.

For more information, contact Panasonic.

AIRZONE



Airzone. Control of the VRF Hide Aways

Airzone has developed interfaces to easily connect to Panasonic VRF Hide Away units. Ensuring optimum performance, comfort and energy savings, the new system is efficient and easy to install.

Airzone full range of accessories for any duct project


Different type of outlets


Also plenum automatic doors


Full range of RC (wired/ wireless, ...)

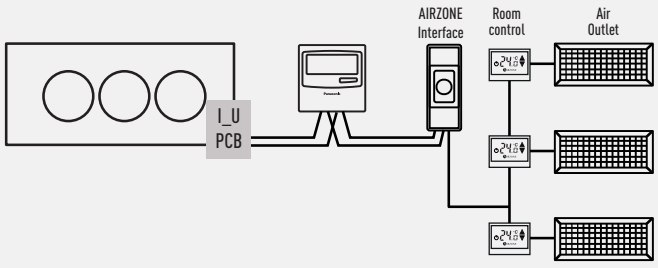

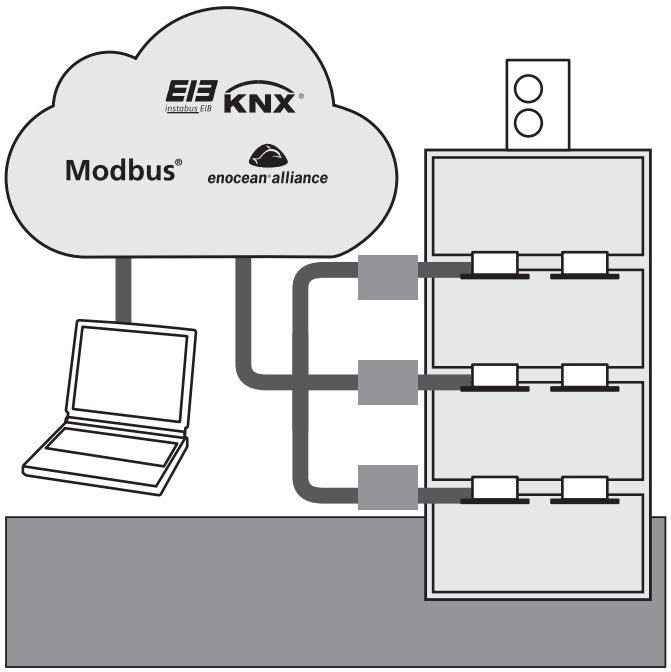

Panasonic Model name	PAW-RC-KNX-1i	PAW-RC-MBS-1	PAW-RC-ENO-1i
Interface	KNX	Modbus RTU	EnOcean
Connected on P-link or in the indoor unit	Indoor unit	Indoor unit	Indoor unit
Maxumim number of indoor units connected	1 (1 group of indoor units)	1 (1 group of indoor units)	1 (1 group of indoor units)
Possible to connect more than 1 indoor unit (group of indoors)	No	No	No

FS Multi Individual Control Systems

Unlike conventional air conditioning systems, the VRF system is applied separately to each room. So, this system is ideal for areas with fluctuation in traffic. Moreover, you can have precise control over each of the rooms to achieve exact conditions. Individual control makes this system more cost-effective and efficient.

Wired Remote Controller (CZ-RT1)



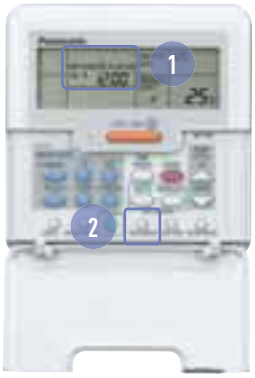

- Remote controller with LCD and self-diagnosis
- Constant monitoring of the system with fault detection
- Weekly timer function
- Maintenance time and cost reduction

1. Weekly Timer

Weekly timer setting (each day of the week) is available to control the air conditioner. Maximum 6 settings/day and 42 settings/week can be executed. The setting temperature can also be programmed for optimal comfort.

OPERATING BUTTONS

- ON/OFF
- Real time daily timer
- Weekly timer: 6 actions per day (total 42 actions per week), including temperature setting.
- Temperature adjustment
- Adjusting air direction
- Selection of operating mode
- Fan speed control
- Restart filter
- Ventilation interlink

MONITOR

- Operating mode
- Centralised control indicator
- Demand control indicator
- Operation priority indicator
- Selected temperature
- Air direction
- Clock
- Day of the week indicator
- Inspection/operating test
- Fan speed
- Filter maintenance
- Defrost/hot start indicator
- Error mode display

EXAMPLES OF SETTING WEEKLY TIMER

Shop with regular holidays
Example: Closed Saturday afternoon and all day Sunday.

Mon-Fri On 9:00, Off 18:00
Sat On 9:00, Off 12:00
Sun Not set

The timer can have different settings for every day of the week.

The number of persons varies depending on time zones.
Example: Set a lower temperature at lunch time when many people may visit.

Everyday
On 12:00 23°C
On 14:00 28°C

In this case, the temperature can be set at the same time.

Don't forget to switch OFF
Example: To prevent forgetting to switch OFF weekdays

Mon-Fri
Off 20:00

The timer can be set for simple shut-OFF operation.

HOW TO SET

1 Select the day



2 Enter the time



*Simple Timer Mode

2. Ventilation Interlink

When an external device such as a ventilator is connected to the indoor unit, switch ON/OFF of the ventilator can be controlled by the wired remote control. Either link-ventilation or independent-ventilation is selectable.

Energy recovery ventilators are also offered by Panasonic.
Optional printed circuit board (Interface Adapter for External Signals: CZ-TA31P*) is needed.

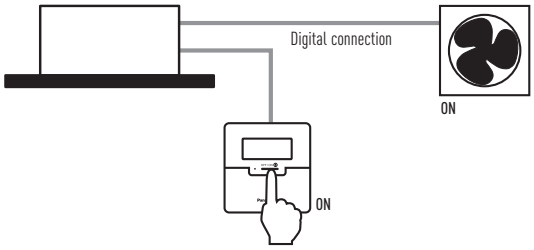

Wireless Remote Controller (CZ-RWS1 for Heat Pump models and CZ-RWC1 for Cooling Only models)



- Remote controller with LCD and self-diagnosis
- Error code recognition
- Maintenance time and cost reduction
- Real time daily timer

OPERATING BUTTONS

- ON/OFF
- Activate/deactivate programmer
- Real time daily timer
- Temperature adjustment
- Air direction
- Operating mode
- Fan speed control
- Restart filter
- Inspection of error code

MONITOR

- Operating mode
- Temperature selected
- Air direction
- Time programming
- Error code display
- Fan speed
- Clock

FS Multi Individual Control Systems

Wireless Controller Receiver (CZ-RWRU1 for Cassette Type and CZ-RWRM1 for Duct Type)



CZ-RWRU1



CZ-RWRM1

Wireless receivers for Wall Mounted and 60x60 Cassette types are equipped as standard.

Cooling/Heating Controller for the Outdoor Unit (CZ-RD1)



Enables the cooling, heating and ventilating operating mode for each outdoor unit. Allows the operating mode to be changed for several outdoor units at the same time by means of a single remote control.

Interface Adapter for External Signals (CZ-TA31P)



- By connecting to the indoor unit, a separately sold ventilator can be controlled
- Remote control operation of the indoor unit is enabled (ON/OFF control)
- The operating condition of the indoor unit (malfunctions, operating status) can be externally output
- Control in linkage with a Energy Recovery Ventilators (ERV) or similar is possible
- CZ-TA31P Not applicable for Wall Mounted indoor unit

CONNECTION WITH EXTERNAL CENTRAL SYSTEM

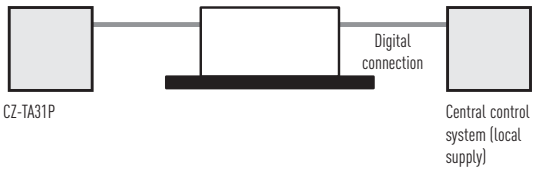

OPERATING
- Remote ON/OFF
- Remote /Local Selection
- ON/OFF Monitor Signal
- Malfunction Signal
- Fan Operation Signal

INTERLINK WITH VENTILATION OR ERV

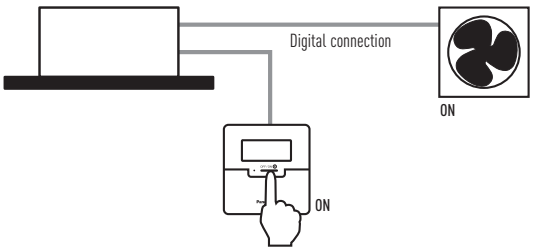

Terminal Module equipped as standard on the outdoor unit (CZ-CAP1)



Control terminal to be connected with outside devices or CZ-RD1 controller
- Used to receive forced stop digital signal from locally procured central control system
- Used to receive demand control signal from locally procured central control system for energy saving with 3-level selection
- Required to connect with CZ-RD1 cooling/heating controller
- Group control of several FS Multi VRF systems for forced stop and CZ-RD1 cooling/heating controller

WHEN CONNECTING FORCED STOP INPUT

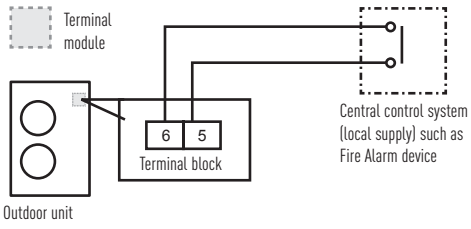

WHEN CONNECTING DEMAND CONTROLLER

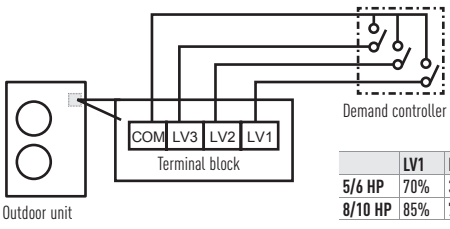

	LV1	LV2	LV3
5/6 HP	70%	30%	0%
8/10 HP	85%	70%	0%

WHEN USING CZ-RD1 (COOLING / HEATING SELECTOR)

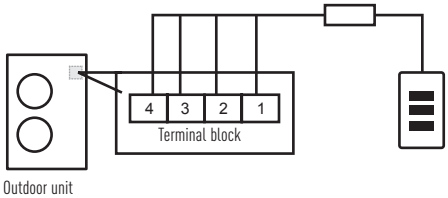

GROUP CONNECTION

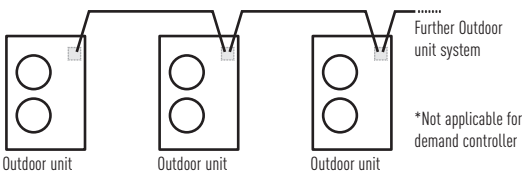

R410A Branch Pipe Kits

The use of branch piping combined with expansion valves mounted in VRF indoor units considerably reduces the imbalance of the refrigerant liquid flow between indoor units despite the smaller piping diameter. The joints for these pipes have been designed to reduce installation time, as they are easy to fit. Finally, the branch pipes optimise refrigerant flow.

CZ-P155BK1 (for 5 and 6 HP systems) and CZ-P280BK1 (for 8 and 10 HP systems)





PIPE ADAPTORS ARE SUPPLIED WITH THE PACKAGE

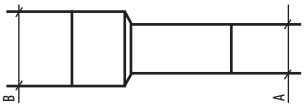

A	Ø 19,05	Ø 12,70	Ø 19,05	Ø 19,05	Ø 9,52
B	Ø 15,88	Ø 15,88	Ø 25,40	Ø 22,20	Ø 12,70
Quantity	1	2	1	3	1

CZ-P155BK1

Liquid pipe branch pipe (inner diameter)

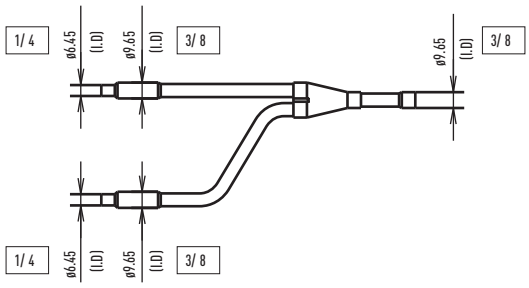

Gas pipe branch pipe (inner diameter)

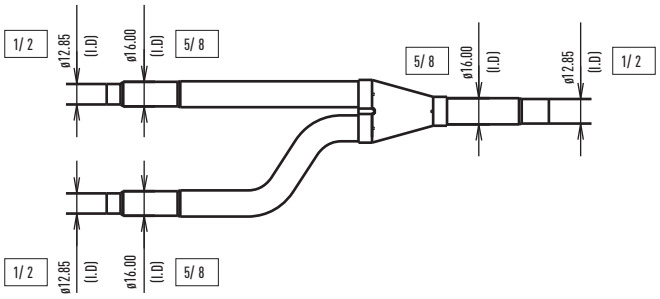

CZ-P280BK1

Liquid pipe branch pipe (inner diameter)

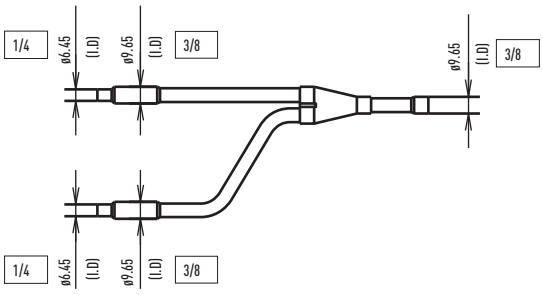

Gas pipe branch pipe (inner diameter)

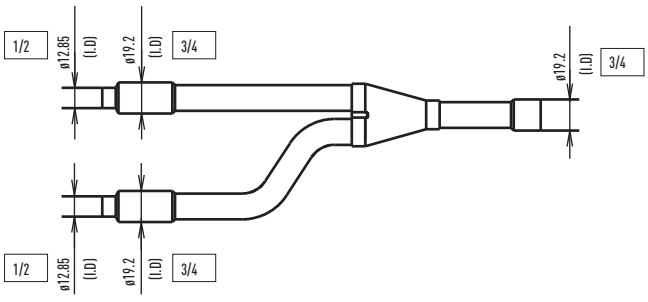

Header pipe model for 2-Pipe systems CZ-P4HP4C2BM (for 8 and 10 HP systems)

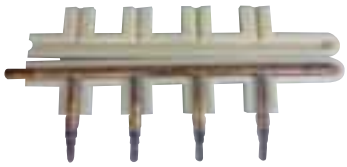

CZ-P4HP4C2BM

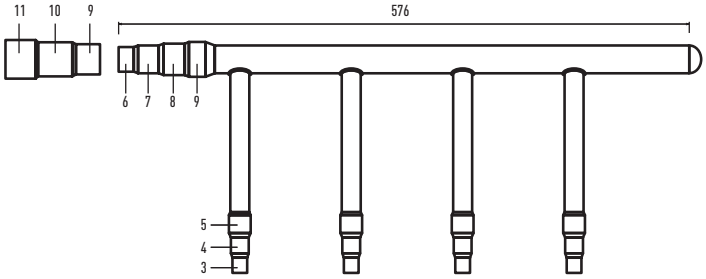

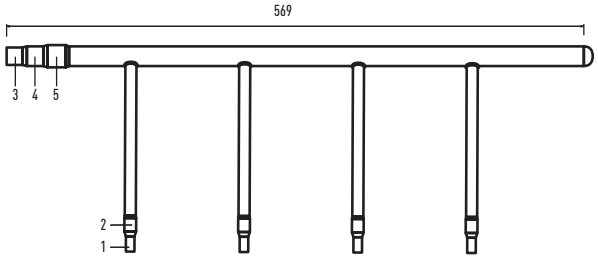

Diameters	1	2	3	4	5	6	7	8	9	10	11
mm	6,35	9,52	12,70	15,88	19,05	22,40	25,40	28,57	31,75	34,92	38,10
Inches	1/4	3/8	1/2	5/8	3/4	7/8	1	1 1/8	1 1/4	1 3/8	1 1/2

Range of FS Multi VRF units

INDOOR UNITS	0,8 HP	1 HP	1,25 HP	1,5 HP
COOLING CAPACITY	2,2 kW	2,8 kW	3,2 kW	3,6 kW
HEATING CAPACITY	2,5 kW	3,2 kW	3,6 kW	4,2 kW
Wall Mounted TYPE	 S-22KA1E5	 S-28KA1E5		 S-36KA1E5
	 S-22KA1E5S	 S-28KA1E5S		 S-36KA1E5S
4 Way 90x90 CASSETTE				
4 Way 60x60 CASSETTE	 S-22YA1E5	 S-28YA1E5		 S-36YA1E5
LOW-SILHOUETTE DUCT TYPE (LOW STATIC PRESSURE TYPE)	 S-22NA1E5	 S-28NA1E5	 S-32NA1E5	 S-36NA1E5
LOW-SILHOUETTE DUCT TYPE (MID STATIC PRESSURE TYPE)				

OUTDOOR UNITS	5 HP	6 HP
COOLING CAPACITY	14,0 kW	15,5 kW
HEATING CAPACITY	16,0 kW	18,0 kW
	 U-5LA1E5	 U-6LA1E5

	1,75 HP	2 HP	2,5 HP	3 HP	3,5 HP	4 HP
	4,5 kW	5,6 kW	6,3 kW	7,1 kW	9,0 kW	10,0 kW
	5,1 kW	6,4 kW	7,1 kW	8,0 kW	10,0 kW	11,2 kW
	 S-45KA1E5	 S-56KA1E5	 S-63KA1E5	 S-71KA1E5		
	 S-45KA1E5S					
			 S-63UA1E5	 S-71UA1E5	 S-90UA1E5	 S-100UA1E5
	 S-45YA1E5	 S-56YA1E5				
	 S-45NA1E5	 S-56NA1E5				
	 S-45MA1E5	 S-56MA1E5	 S-63MA1E5	 S-71MA1E5	 S-90MA1E5	 S-100MA1E5

	8 HP	10 HP
	22,4 kW	28,0 kW
	25,0kW	31,5kW
	 U-8EA1E8	 U-10EA1E8

Feature Comparison

Indoor Unit		Wall Mounted		4 Way 60x60 Cassette	
				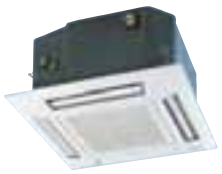	
Feature	Remote controller	Wired remote controller	Infrared remote controller	Wired remote controller	Infrared remote controller
Control Flexibility	24 h ON/OFF Real setting timer	✘	✘	✘	✘
	Weekly timer (6-Pattern/Max. 42-Pattern with temp setting)	✘		✘	
	Group control by single remote controller	✘	✘	✘	✘
	O_U Silent operation mode (3-Level)	✘	✘	✘	✘
	I_U Thermistor switching (I_U or RC)	✘		✘	
	Ventilation unit control	✘		✘	
	Digital input / Output contact			with CZ-TA31P	with CZ-TA31P
Comfortability	Filter sign	✘	✘	✘	✘
	Hot start control	✘	✘	✘	✘
	Filter	✘	✘	✘	✘
Field Service & Maintenance	Indoor unit address setting	✘	✘	✘	✘
	Outdoor unit address setting	✘	✘	✘	✘
	Indoor unit test run mode	✘	✘	✘	✘
	Emergency operation		✘		✘
	Self diagnosis function	✘	✘	✘	✘
	Self diagnosis records	✘		✘	

Outdoor Unit		5-6 HP	8-10 HP
			
Control Flexibility	"Cooling Only" model setting (Locked)	✘	✘
	Power save mode	✘	✘
	O_U Silent operation Mode (3-Level)	✘	✘
	Auto restart	✘	✘
Field Service & Maintenance	Pump down operation	✘	
	Cooling operation TESTRUN	✘	✘
	Heating operation TESTRUN	✘	✘
	Automatic address resetting	✘	✘
	Self diagnosis function	✘ (LED display)	✘ (LED display)
Digital Input/ Output	Cooling / Heating selector (optional)	✘	✘
	Demand control input (3 Levels demand control input)	✘	✘
	Forced stop input	✘	✘

	4 Way 90x90 Cassette		Low Static Pressure Hide Away		Low-Silhouette Mid Static Pressure Hide Away	
						
	Wired remote controller	Infrared remote controller	Wired remote controller	Infrared remote controller	Wired remote controller	Infrared remote controller
	✘	✘	✘	✘	✘	✘
	✘		✘		✘	
	✘	✘	✘	✘	✘	✘
	✘	✘	✘	✘	✘	✘
	✘		✘		✘	
	✘		✘		✘	
	with CZ-TA31P	with CZ-TA31P	with CZ-TA31P	with CZ-TA31P	with CZ-TA31P	with CZ-TA31P
	✘	✘	✘	✘	✘	✘
	✘	✘	✘	✘	✘	✘
	✘	✘	✘	✘		
	✘	✘	✘	✘	✘	✘
	✘	✘	✘	✘	✘	✘
	✘	✘	✘	✘	✘	✘
		✘		✘		✘
	✘	✘	✘	✘	✘	✘
	✘		✘		✘	

5 AND 6 HP
OUTDOOR UNITS

The Single Phase 5 and 6 HP outdoor units are ideal for installation in restaurants, offices and homes.

All Panasonic FS Multi VRF series modules are equipped with DC inverter compressors for the higher energy saving operation. The new design not only achieves quiet and highly efficient operation, but it also reduces running costs.



HP			5 HP	6 HP
Model			**U-5LA1E5**	**U-6LA1E5**
Power source			220-230-240 V / Sinle Phase / 50Hz	220-230-240 / Sinle Phase / 50Hz
Cooling capacity		kW	14,00	15,50
EER		**W/W**	**3,25**	**3,01**
Current[1]		A	19,80	23,50
Power input cooling		W	4.310	5.150
Heating capacity		kW	16,00	18,00
COP		**W/W**	**4,03**	**3,84**
Current[1]		A	18,10	21,40
Power input heating		W	3.970	4.690
Air volume	Cooling	m^3/min	95,0	98,0
	Heating	m^3/min	95,0	98,0
Moisture removal volume		L/h	9,0	10,3
Sound pressure level	Cooling (Hi / Lo)	dB(A)	53 /-	55 /-
	Heating (Hi / Lo)	dB(A)	55 /-	57 /-
Sound power level	Cooling (Hi / Lo)	dB	71 /-	73 /-
	Heating (Hi / Lo)	dB	72 /-	74 /-
Dimensions	H x W x D	mm	1.340 x 900 x 350 (+40)[2]	1.340 x 900 x 350 (+40)[2]
Net weight		kg	123	123
Connectable indoor unit	Total capacity		50~130% of outdoor unit capacity	50~130% of outdoor unit capacity
	Model / Quantity	unit	S-22 ~ S-90 / 2 - 8	S-22 ~ S-90 / 2 - 8
Piping connections	Liquid pipe	mm (inch)	9,52 (3/8)	9,52 (3/8)
	Gas pipe	mm (inch)	15,88 (5/8)	15,88 (5/8)
Maximum total piping length	Min - Max	m	20 - 90	20 - 90
Elevation difference (in/out)	Max	m	30	30
Max charge less length	Max	m	90	90
Refrigerant loading	R410A	kg	8	8
Operating range	Cooling Min / Max	°C	-5 / 43	-5 / 43
	Heating Min / Max	°C	-15 / 24	-15 / 24

Rating Conditions: Cooling Indoor 27 °C DB / 19 °C WB. Cooling Outdoor 35 °C DB / 24 °C WB. Heating Indoor 20 °C DB. Heating Outdoor 7 °C DB / 6 °C WB. (DB: Dry Bulb; WB: Wet Bulb)

1) These values are at 230V only. For 220V and 240V specifications, please refer to the technical data book.
2) Add 40mm for discharge grille.

Power		5 HP	6 HP
Reference		**U-5LA1E5**	**U-6LA1E5**
Maximum combination of indoor unit		8	8
Power rates	kW	7,0 - 14,0 - 18,2	7,8 - 15,5 - 20,2
Power supply	V/Hz	220-240 / 50	220-240 / 50



U-5LA1E5 // U-6LA1E5

Technical focus

- Refrigerant charge-free system (no additional refrigerant is required)
- Very quiet outdoor units
- Flexible installation and easy setup
- Easy trouble-shooting function
- Space-saving design

Features

Control Flexibility
- Cooling Only Model Setting (by jumper line cut)
- Power Save Mode
- Outdoor Unit Silent Operation Mode
- Auto Restart

Field Service & Maintenance
- Pump Down Operation
- Cooling Operation TESTRUN
- Heating Operation TESTRUN
- Automatic Address Resetting
- Self Diagnosis Function (LED display)

Digital Input/Output
- Cooling/Heating Selector
- Demand Control Input (LV1/LV2/LV3)
- Forced STOP Input

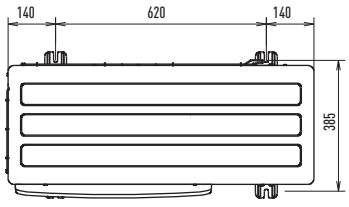

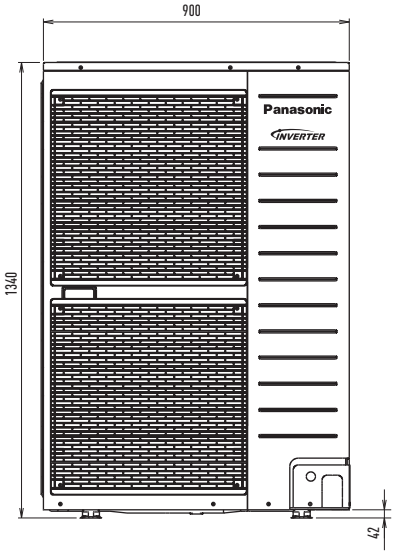

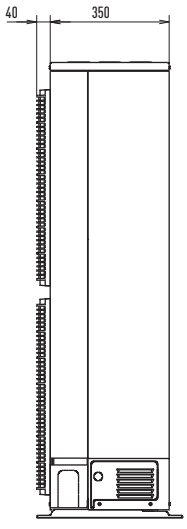

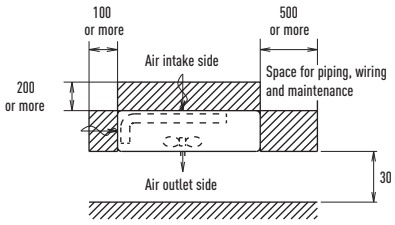

8 AND 10 HP
OUTDOOR UNITS

Three Phase 8 and 10 HP outdoor units. Easy to install, high performances!
All Panasonic FS Multi VRF series modules are equipped with DC inverter compressors for the higher energy saving operation. The new design not only achieves quite and highly efficient operation, but it also reduces running costs.



HP			8 HP	10 HP
Model			**U-8EA1E8**	**U-10EA1E8**
Power source			380-400-415 V / Three Phase / 50Hz	380-400-415 V / Three Phase / 50Hz
Cooling capacity		kW	22,40	28,00
EER		**W/W**	**3,70**	**3,37**
Current[1]		A	9,40	12,80
Power input cooling		W	6.050	8.310
Heating capacity		kW	25,00	31,50
COP		**W/W**	**4,10**	**4,01**
Current[1]		A	9,40	12,10
Power input heating		W	6.100	7.860
Air volume	Cooling	m^3/min	150	154
	Heating	m^3/min	150	154
Sound pressure level	Cooling (Hi / Lo)	dB(A)	58 / -	59 / -
	Heating (Hi / Lo)	dB(A)	59 / -	60 / -
Sound power level	Cooling (Hi / Lo)	dB	78 / -	79 / -
	Heating (Hi / Lo)	dB	79 / -	80 / -
Dimensions	H x W x D	mm	1.745 x 920 x 760 (+40)[2]	1.745 x 920 x 760 (+40)[2]
Net weight		kg	195	210
Connectable indoor unit	Total Capacity		50~130% of outdoor unit capacity	50~130% of outdoor unit capacity
	Model / Quantity	unit	S-22 ~ S-125 / 2 - 13	S-22 ~ S-125 / 2 - 16
Piping connection	Liquid pipe	mm (inch)	9,52 (3/8)	9,52 (3/8)
	Gas pipe	mm (inch)	19,05 (4/3)	22,22 (7/8)
Maximum total piping length	Min - Max	m	15 - 300	15 - 300
Elevation difference (in/out)	Max	m	50	50
Refrigerant loading	R410A	kg	8,5	11,0
Operating range	Cooling Min / Max	°C	-5 / 43	-5 / 43
	Heating Min / Max	°C	-20 / 24	-20 / 24

Rating Conditions: Cooling Indoor 27 °C DB / 19 °C WB. Cooling Outdoor 35 °C DB / 24 °C WB. Heating Indoor 20 °C DB. Heating Outdoor 7 °C DB / 6 °C WB. (DB: Dry Bulb; WB: Wet Bulb)

1) These values are at 400 V only. For 380 V and 415 V specifications, please refer to the technical data book.
2) Add 40mm for discharge grille.

Power			8 HP	10 HP
Reference			**U-8EA1E8**	**U-10EA1E8**
Maximum combination of indoor unit			13	16
Power rates		kW	11,2 - 22,4 - 29,1	14,0 - 28,0 - 36,4
Power supply		V/Hz	380 - 415 / 50	380 - 415 / 50



U-8EA1E8 // U-10EA1E8

Technical focus

- Very quiet outdoor units
- Flexible installation and easy setup
- Easy trouble-shooting function
- Space-saving design

Features

Control Flexibility

- Cooling/Heating Selector
- Demand Control Input (LV1/LV2/LV3)
- Forced STOP Input
- Cooling Only Model Setting (by jumper line cut)
- Power Save Mode
- Outdoor Unit Silent Operation Mode
- Auto Restart

Field Service & Maintenance

- Cooling Operation TESTRUN
- Heating Operation TESTRUN
- Automatic Adress Resetting
- Self Diagnosis Function (LED display)

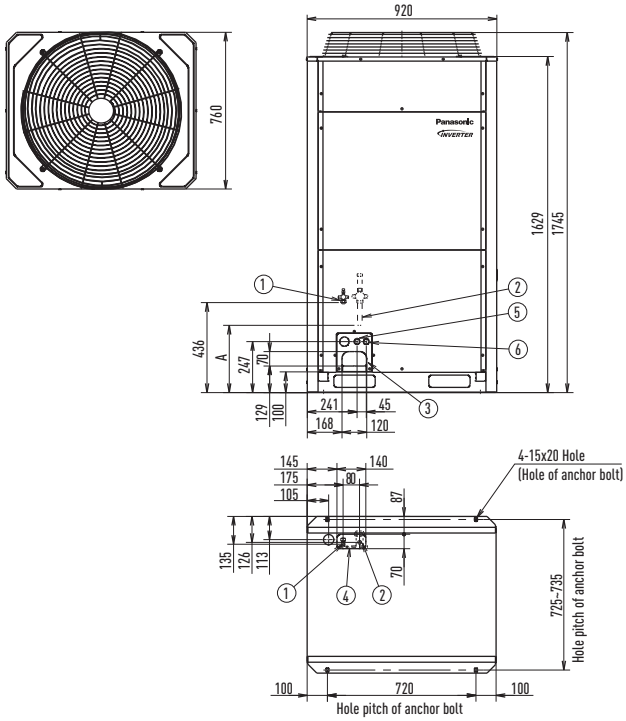

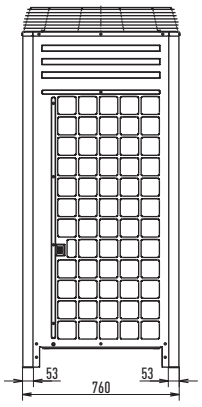

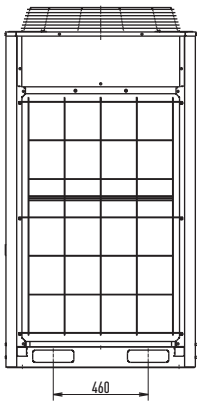

1	3-Way Valve (Liquid pipe)
2	3-Way Valve (Gas pipe)
3	Pipe Hole (Front)
4	Pipe Hole (Bottom)
5	Conduit Hole (Power Cord)
6	Conduit Hole (Bus Line)
No	Application

10 HP	326	9,52 Flare	22,22 Brazing
8 HP	196*		19,05 Brazing
Model	A	Liquid pipe	Gas pipe
	Connecting Pipe		

* Dimension when use the accessory pipe



FS Multi Indoor Units

Wide choice of models depending on the indoor requirements.



ETHEREA

Wall Mounted Type

Self diagnosis function with 7-seg code display

When the air conditioner has trouble the indicator and 7-seg code displays on the panel making it easier for service technicians to diagnose problems.

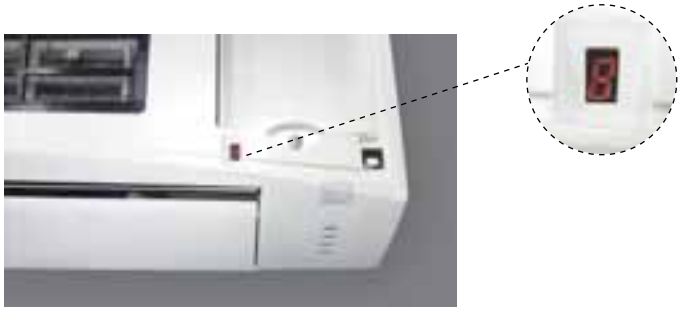

Flexible installation

Thanks to its compact and stylish design, Panasonic's wall mounted air conditioner can be installed in very limited spaces, without detracting from your room's interior design.

4 Way 60x60 Cassette

Compact design allows space saving!

The panel is a compact 70x70cm so it can be installed even in a small room where space is limited. The ceiling space required is 65x65cm.
Only 260mm thin and 750mm drain-up mechanism

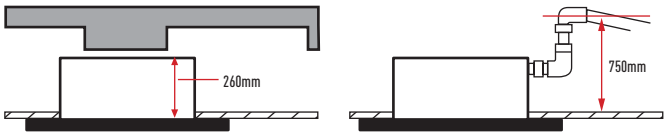

With a slim profile of only 260mm, the unit fits easily in ceiling spaces and tight spots. The internal pump allows the drain line to be elevated up to 750mm above the base of the unit.

4 Way 90x90 Cassette

Three Airflow patterns for extra comfort

Multi-Comfort Air Control

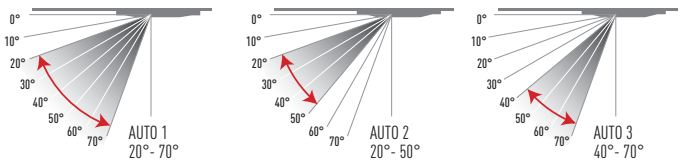

Elegant Panel, 4-direction Blow

The slim body can be totally hidden in the ceiling, only leaving its elegant panel outside to decorate your room. The 4-direction blow can deliver airflows evenly throughout the room, eliminating the temperature difference.

Innovative design creates extra quiet operation

More noise reducing Material. Adopting noise reducing material inside, improving the seal quality to isolate and reduce the operation noises.

Flexible piping layout

Drainpipe and refrigerant pipe distributed on the different sides of the unit, giving more flexibility of piping layout. Its excellent inside heat-protection material effectively avoids frost and water-leakage, and reduces the possibility of damage during transportation.



1. Refrigerant pipe / 2. Drainpipe

Low-Silhouette Duct Type Low Static Pressure

Ultra-thin 20cm design: fits in even where ceiling height is limited

The slim design of this ultra-thin, duct-type indoor unit is especially suited for rooms with partially or minimally dropped ceilings. Its space-saving design contributes to a brighter and more spacious living environment.
Even where ceiling height is limited, the indoor units effectively fit in and provide a more spacious feel in most suspended ceiling situations. Occupying only 20cm of vertical space and projecting only 55cm, the unit can be installed in semi-dropped ceiling situations, thus helping to create spacious and comfortable surroundings.

Thoroughly considered connecting flange design

The addition of air duct connecting flanges on the indoor unit enables easy connection to short air ducts. Thus flange design both greatly simplifies installation and makes it easy to effectively seal the air duct.

Low-Silhouette Duct Type Mid Static Pressure

Compact, lightweight design for easy installation

Thin and only 250mm high, with a slim width. This compact unit fits easily in limited spaces. The lightweight and small size also make it easier to transport and install.

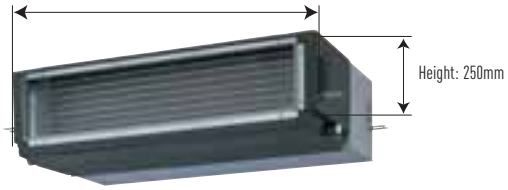

Width*: 780mm (45/56MA1E5) / 1,000mm (63/71/90MA1E5).
* Add 100mm for power supply equipment.

Versatile Air Inlet and Drain Installation

The mounting locations for the air inlet and drain outlet can be changed as desired for easy, flexible system layout and installation.

Static Pressure Selection

The static pressure is selectable from 5 or 7mmAq according to the condition of the duct. For short ducts, the lower pressure of 5mmAq provides efficient operation.

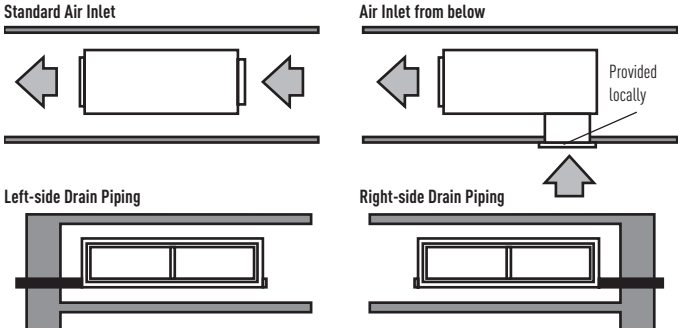

WALL MOUNTED TYPE
SILVER



FS Multi VRF wall mounted type air conditioners have been designed in a beautiful and stylish way.
The fresh new horizontal curved form characterizes the air conditioner's new design. The gentle curve at the centre stylishly conceals the complex high-performance mechanisms inside, while thin ends emphasize the air conditioner's slim style. This allows it to blend into the wall in an attractive manner, and to harmonise with virtually any room interior.

Technical focus
- Flexible installation
- Effective long-life filter
- Self diagnosis function with 7-seg code display

Control flexibility
- 24-Hours ON/OFF real setting timer
- Weekly timer (wired only)
- Group control by single remote controller
- Outdoor unit silent operation mode
- Indoor unit thermistor switching (wired only)
- Ventilation unit control (wired only)

Comfortability
- Filter sign
- Hot start control
- Filter

Service & maintenance
- Indoor unit address setting
- Outdoor unit address setting
- Automatic address resetting for group control (wired only)
- Indoor unit test run mode
- Emergency operation (infrared only)
- Self diagnosis function
- Self diagnosis records (wired only)

* Wired: wired remote controller / Infrared: infrared remote controller.

Effective long-life filter
This long-life filter can trap dust mites, tobacco smoke and other common pollutants effectively. When it catches certain airborne particles, the clean-indicator will remind you to clean. You can remove the filter quickly with a simple one step operation, after cleaning, it can be re-fitted.



Optional Controller
Wired Remote Controller
CZ-RT1



Optional Controller
Wireless Remote Controller
CZ-RWS1 (Heat Pump Models)
CZ-RWC1 (Cooling Only Models)

			0,8 HP	1,0 HP	1,5 HP	1,75 HP
Indoor			**S-22KA1E5S**	**S-28KA1E5S**	**S-36KA1E5S**	**S-45KA1E5S**
Power source			220-230-240 V / Single Phase / 50 Hz	220-230-240 V / Single Phase / 50 Hz	220-230-240 V / Single Phase / 50 Hz	220-230-240 V / Single Phase / 50 Hz
Cooling capacity		kW	2,20	2,80	3,60	4,50
Current		A	0,25	0,30	0,35	0,40
Power input cooling		W	25	27	30	35
Heating capacity		kW	2,50	3,20	4,20	5,10
Current		A	0,25	0,30	0,35	0,40
Power input heating		W	25	27	30	35
Air volume	Cooling	m^3/min	9,5	9,7	10,9	11,3
	Heating	m^3/min	10,3	10,9	11,6	12,1
Moisture removal volume		L/h	1,3	1,6	2,1	2,5
Sound pressure level	Cooling (Hi / Lo)	dB(A)	38 / 33	39 / 33	42 / 34	43 / 35
	Heating (Hi / Lo)	dB(A)	38 / 33	39 / 33	42 / 34	43 / 35
Sound power level	Cooling (Hi / Lo)	dB	53 / 48	54 / 48	57 / 49	58 / 50
	Heating (Hi / Lo)	dB	53 / 48	54 / 48	57 / 49	58 / 50
Dimensions	H x W x D	mm	290 x 870 x 204	290 x 870 x 204	290 x 870 x 204	290 x 870 x 204
Net weight		kg	9	9	9	9
Piping connection	Liquid pipe	mm (inch)	6,35 (1/4)	6,35 (1/4)	6,35 (1/4)	6,35 (1/4)
	Gas pipe	mm (inch)	12,7 (1/2)	12,7 (1/2)	12,7 (1/2)	12,7 (1/2)

Rating Conditions: Cooling Indoor 27°C DB / 19°C WB. Cooling Outdoor 35°C DB / 24°C WB. Heating Indoor 20°C DB. Heating Outdoor 7°C DB / 6°C WB.
DB: Dry Bulb; WB: Wet Bulb

Before installing in quiet room such as a bedroom, please consult with an authorized distributor.

Maximum flexibility VRF | Easy control by BMS CONNECTIVITY | Environmentally friendly refrigerant R410A

WALL MOUNTED TYPE
WHITE - ALSO AVAILALBE IN WIDE OPTION



S-56KA1E5 // S-63KA1E5 // S-71KA1E5



S-22KA1E5 // S-28KA1E5 // S-36KA1E5 // S-45KA1E5

FS Multi VRF wall mounted type air conditioners have been designed in a beautiful and stylish way.
The fresh new horizontal curved form characterizes the air conditioner's new design. This model is also available in Wide option. The gentle curve at the centre stylishly conceals the complex high-performance mechanisms inside, while thin ends emphasize the air conditioner's slim style. This allows it to blend into the wall in an attractive manner, and to harmonise with virtually any room interior.

Technical focus
- Flexible installation
- Effective long-life filter
- Self diagnosis function with 7-seg code display

Control flexibility
- 24-Hours ON/OFF real setting timer
- Weekly timer (wired only)
- Group control by single remote controller
- Outdoor unit silent operation mode
- Indoor unit thermistor switching (wired only)
- Ventilation unit control (wired only)

Comfortability
- Filter sign
- Hot start control
- Filter

Service & maintenance
- Indoor unit address setting
- Outdoor unit address setting
- Automatic address resetting for group control (wired only)
- Indoor unit test run mode
- Emergency operation (infrared only)
- Self diagnosis function
- Self diagnosis records (wired only)

* Wired: wired remote controller / Infrared: infrared remote controller.

Effective long-life filter
This long-life filter can trap dust mites, tobacco smoke and other common pollutants effectively. When it catches certain airborne particles, the clean-indicator will remind you to clean. You can remove the filter quickly with a simple one step operation, after cleaning, it can be re-fitted.



Optional Controller
Wired Remote Controller
CZ-RT1



Optional Controller
Wireless Remote Controller
CZ-RWS1 (Heat Pump Models)
CZ-RWC1 (Cooling Only Models)

			0,8 HP	1,0 HP	1,5 HP	1,75 HP	2,0 HP	2,5 HP	3,0 HP
Indoor			**S-22KA1E5**	**S-28KA1E5**	**S-36KA1E5**	**S-45KA1E5**	**S-56KA1E5**	**S-63KA1E5**	**S-71KA1E5**
Power source			220-230-240 V / Single Phase / 50 Hz						
Cooling capacity		kW	2,20	2,80	3,60	4,50	5,60	6,30	7,10
Current		A	0,25	0,30	0,35	0,40	0,40	0,45	0,50
Power input cooling		W	25	27	30	35	45	50	55
Heating capacity		kW	2,50	3,20	4,20	5,10	6,40	7,10	8,00
Current		A	0,25	0,30	0,35	0,40	0,40	0,45	0,50
Power input heating		W	25	27	30	35	45	50	55
Air volume	Cooling	m^3/min	9,5	9,7	10,9	11,3	15,3	16,0	17,4
	Heating	m^3/min	10,3	10,9	11,6	12,1	16,7	17,1	18,3
Moisture removal volume		L/h	1,3	1,6	2,1	2,5	3,2	3,6	4,2
Sound pressure level	Cooling (Hi / Lo)	dB(A)	38 / 33	39 / 33	42 / 34	43 / 35	44 / 38	46 / 39	48 / 40
	Heating (Hi / Lo)	dB(A)	38 / 33	39 / 33	42 / 34	43 / 35	44 / 38	46 / 39	48 / 40
Sound power level	Cooling (Hi / Lo)	dB	53 / 48	54 / 48	57 / 49	58 / 50	59 / 53	61 / 54	63 / 55
	Heating (Hi / Lo)	dB	53 / 48	54 / 48	57 / 49	58 / 50	59 / 53	61 / 54	63 / 55
Dimensions	H x W x D	mm	290 x 870 x 204	290 x 870 x 204	290 x 870 x 204	290 x 870 x 204	290 x 1.070 x 235	290 x 1.070 x 235	290 x 1.070 x 235
Net weight		kg	9	9	9	9	11	12	12
Piping connection	Liquid pipe	mm (inch)	6,35 (1/4)	6,35 (1/4)	6,35 (1/4)	6,35 (1/4)	6,35 (1/4)	6,35 (1/4)	9,52 (3/8)
	Gas pipe	mm (inch)	12,7 (1/2)	12,7 (1/2)	12,7 (1/2)	12,7 (1/2)	12,7 (1/2)	12,7 (1/2)	15,88 (5/8)

Rating Conditions: Cooling Indoor 27°C DB / 19°C WB. Cooling Outdoor 35°C DB / 24°C WB. Heating Indoor 20°C DB. Heating Outdoor 7°C DB / 6°C WB.
DB: Dry Bulb; WB: Wet Bulb

Before installing in quiet room such as a bedroom, please consult with an authorized distributor.

Maximum flexibility — VRF
Easy control by BMS — CONNECTIVITY
Environmentally friendly refrigerant — R410A

4 WAY 60x60 CASSETTE



4 Way airflow comfort with elegant, compact panel.

Technical focus
- Compact design allows space saving!
- Self diagnosis function with 7-seg code display
- Only 260mm thin
- 750mm drain-up mechanism

Control flexibility
- 24-Hours ON/OFF real setting timer
- Weekly timer (wired only)
- Group control by single remote controller
- Outdoor unit silent operation mode
- Indoor unit thermistor switching (wired only)
- Ventilation unit control (wired only)
- Digital input/output contact - with CZ-TA31P (optional)

Comfortability
- Filter sign
- Hot start control
- Filter

Field service & maintenance
- Indoor unit address setting
- Outdoor unit address setting
- Automatic address resetting for group control (wired only)
- Indoor unit test run mode
- Emergency operation (infrared only)
- Self diagnosis function
- Self diagnosis records (wired only)

* Wired: wired remote controller / Infrared: infrared remote controller.

Self diagnosis function with 7-seg code display
When the air conditioner has trouble the indicator and 7-seg code displays on the panel making it easier for service technicians to diagnose problems.





Optional Controller
Wired Remote Controller
CZ-RT1



Optional Controller
Wireless Remote Controller
CZ-RWS1 (Heat Pump Models)
CZ-RWC1 (Cooling Only Models)

			0,8 HP	1,0 HP	1,5 HP	1,75 HP	2,0 HP
Indoor			**S-22YA1E5**	**S-28YA1E5**	**S-36YA1E5**	**S-45YA1E5**	**S-56YA1E5**
Panel			**CZ-KPY1**	**CZ-KPY1**	**CZ-KPY1**	**CZ-KPY1**	**CZ-KPY1**
Power source			220-230-240 V / Single Phase / 50 Hz				
Cooling capacity		kW	2,20	2,80	3,60	4,50	5,60
Current		A	0,30	0,30	0,35	0,35	0,35
Power input cooling		W	35	35	40	40	45
Heating capacity		kW	2,50	3,20	4,20	5,10	6,40
Current		A	0,30	0,30	0,35	0,35	0,35
Power input heating		W	35	35	40	40	45
Air volume	Cooling	m^3/min	8,3	8,6	9,0	9,3	9,9
	Heating	m^3/min	9,3	9,6	9,9	10,3	10,6
Moisture removal volume		L/h	1,3	1,6	2,1	2,5	3,2
Sound pressure level	Cooling (Hi / Lo)	dB(A)	36 / 33	37 / 33	38 / 34	39 / 35	40 / 36
	Heating (Hi / Lo)	dB(A)	36 / 33	37 / 33	38 / 34	39 / 35	40 / 36
Sound power level	Cooling (Hi / Lo)	dB	51 / 48	52 / 48	53 / 49	54 / 50	55 / 51
	Heating (Hi / Lo)	dB	51 / 48	52 / 48	53 / 49	54 / 50	55 / 51
Dimensions (H x W x D)	Indoor unit	mm	260 x 575 x 575	260 x 575 x 575	260 x 575 x 575	260 x 575 x 575	260 x 575 x 575
	Panel	mm	51 x 700 x 700	51 x 700 x 700	51 x 700 x 700	51 x 700 x 700	51 x 700 x 700
Net weight		kg	18	18	18	18	18
Piping connection	Liquid pipe	mm (inch)	6,35 (1/4)	6,35 (1/4)	6,35 (1/4)	6,35 (1/4)	6,35 (1/4)
	Gas pipe	mm (inch)	12,7 (1/2)	12,7 (1/2)	12,7 (1/2)	12,7 (1/2)	12,7 (1/2)

Rating Conditions: Cooling Indoor 27°C DB / 19°C WB. Cooling Outdoor 35°C DB / 24°C WB. Heating Indoor 20°C DB. Heating Outdoor 7°C DB / 6°C WB.
DB: Dry Bulb; WB: Wet Bulb

Maximum flexibility VRF | Easy control by BMS CONNECTIVITY | Environmentally friendly refrigerant R410A

4 WAY 90x90 CASSETTE



4 Way airflow, powerful, and compact (only 246cm high)

Technical focus
- Self diagnosis function with 7-seg code display
- Only 246mm thin
- 750mm drain-up mechanism
- Elegant panel, 4-direction blow
- Three airflow patterns for extra comfort
- Flexible piping layout
- Innovative design creates extra quiet operation

Control flexibility
- 24-Hours ON/OFF real setting timer
- Weekly timer (wired only)
- Group control by single remote controller
- Outdoor unit silent operation mode
- Indoor unit thermistor switching (wired only)
- Ventilation unit control (wired only)
- Digital input/output contact - with CZ-TA31P (optional)

Comfortability
- Filter sign
- Hot start control
- Filter

Field service & maintenance
- Indoor unit address setting
- Outdoor unit address setting
- Automatic address resetting for group control (wired only)
- Indoor unit test run mode
- Emergency operation (infrared only)
- Self diagnosis function
- Self diagnosis records (wired only)

* Wired: wired remote controller / Infrared: infrared remote controller.

Self diagnosis function with 7-seg code display
When the air conditioner has trouble the indicator and 7-seg code displays on the panel making it easier for service technicians to diagnose problems.



Only 246mm thin and 750mm drain-up mechanism



Optional Controller
Wired Remote Controller
CZ-RT1



Optional Controller
Wireless Remote Controller
CZ-RWS1 (Heat Pump Models)
CZ-RWC1 (Cooling Only Models)

			2,5 HP	3,0 HP	3,5 HP	4,0 HP
Indoor			**S-63UA1E5**	**S-71UA1E5**	**S-90UA1E5**	**S-100UA1E5**
Panel			**CZ-BT03P**	**CZ-BT03P**	**CZ-BT03P**	**CZ-BT03P**
Power source			220-230-240 V / Single Phase / 50 Hz	220-230-240 V / Single Phase / 50 Hz	220-230-240 V / Single Phase / 50 Hz	220-230-240 V / Single Phase / 50 Hz
Cooling capacity		kW	6,30	7,10	9,00	10,00
Current[1]		A	0,50	0,55	0,55	1,05
Power input cooling[1]		W	110	115	115	205
Heating capacity		kW	7,10	8,00	10,00	11,20
Current[1]		A	0,50	0,55	0,55	1,05
Power input heating[1]		W	110	115	115	205
Air volume	Cooling	m³/min	21	22	22	30
	Heating	m³/min	21	22	22	30
Moisture removal volume		L/h	3,6	4,2	5,4	6,0
Sound pressure level[1]	Cooling (Hi / Lo)	dB(A)	41 / 35	42 / 36	42 / 36	48 / 43
	Heating (Hi / Lo)	dB(A)	41 / 35	42 / 36	42 / 36	48 / 43
Sound power level[1]	Cooling (Hi / Lo)	dB	56 / 50	57 / 51	57 / 51	63 / 58
	Heating (Hi / Lo)	dB	56 / 50	57 / 51	57 / 51	63 / 58
Dimensions (H x W x D)	Indoor unit / Panel	mm	246 x 840 x 840 / 45 x 950 x 950	246 x 840 x 840 / 45 x 950 x 950	246 x 840 x 840 / 45 x 950 x 950	288 x 840 x 840 / 45 x 950 x 950
Net weight		kg	26	26	26	30
Piping connection	Liquid pipe	mm (inch)	6,35 (1/4)	9,52 (3/8)	9,52 (3/8)	9,52 (3/8)
	Gas pipe	mm (inch)	12,7 (1/2)	15,88 (5/8)	15,88 (5/8)	15,88 (5/8)

Rating Conditions: Cooling Indoor 27°C DB / 19°C WB. Cooling Outdoor 35°C DB / 24°C WB. Heating Indoor 20°C DB. Heating Outdoor 7°C DB / 6°C WB.
DB: Dry Bulb; WB: Wet Bulb

1) These values are at 230V only. For 220V and 240V specifications, please refer to the technical data book.

Maximum flexibility VRF | Easy control by BMS CONNECTIVITY | Environmentally friendly refrigerant R410A

LOW-SILHOUETTE DUCT TYPE LOW STATIC PRESSURE



Offers maximum installation flexibility with lightweight design
Only 200mm tall! Ideal for hotels and offices.

Technical focus
- Ultra-thin, Duct-type indoor unit
- Ultra-thin 200mm design: fits in even where ceiling height is limited
- Built-in selectable static pressure settings
- Thoroughly considered connecting flange design

Control flexibility
- 24-Hours ON/OFF Real Setting Timer
- Weekly Timer (Wired Only)
- Group Control by Single Remote Controller
- Outdoor Unit Silent Operation Mode
- Indoor Unit Thermistor Switching (Wired Only)
- Ventilation Unit Control (Wired Only)
- Digital Input/Output Contact - with CZ-TA31P (Optional)

Comfortability
- Filter Sign
- Hot Start Control

Field service & maintenance
- Indoor Unit Address Setting
- Outdoor Unit Address Setting
- Automatic Address Resetting for Group Control (Wired Only)
- Indoor Unit Test Run Mode
- Emergency Operation (Infrared Only)
- Self Diagnosis Function
- Self Diagnosis Records (Wired Only)

* Wired: Wired Remote Controller / Infrared: Infrared Remote Controller.

Built-in selectable static pressure settings
Our ultra thin duct-type indoor units have two static pressure settings: 0Pa and 29Pa. In situations without ducting, the 0Pa* static pressure setting is applicable. Where ducting is present, set the unit to 29Pa* static pressure.

*0 Pa is the default setting: 29 Pa must be selected if required.

Installation Diagram for 29 Pa Setting

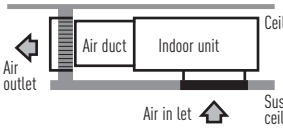

Installation Diagram for 0 Pa Setting

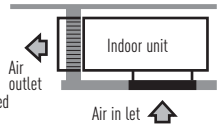



Optional Controller
Wired Remote Controller
CZ-RT1



Optional Controller
Wireless Remote Controller
CZ-RWS1 (Heat Pump Models)
CZ-RWC1 (Cooling Only Models)

			0,8 HP	1,0 HP	1,25 HP	1,5 HP	1,75 HP	2,0 HP
Indoor			**S-22NA1E5**	**S-28NA1E5**	**S-32NA1E5**	**S-36NA1E5**	**S-45NA1E5**	**S-56NA1E5**
Power source			220-230-240 V / Single Phase / 50 Hz					
Cooling capacity		kW	2,20	2,80	3,20	3,60	4,50	5,60
Current[1]		A	0,40	0,45	0,45	0,45	0,50	0,50
Power input cooling[1]		W	75	80	85	85	95	105
Heating capacity		kW	2,50	3,20	3,60	4,20	5,10	6,40
Current[1]		A	0,40	0,45	0,45	0,45	0,50	0,50
Power input heating[1]		W	75	80	85	85	95	105
Air volume	Cooling	m^3/min	10	11	11	11	12	12,5
	Heating	m^3/min	10	11	11	11	12	12,5
Moisture removal volume		L/h	1,3	1,6	1,8	2,1	2,5	3,2
Sound pressure level[1]	Cooling (Hi / Lo)	dB(A)	36 / 30	37 / 30	38 / 31	38 / 31	39 / 32	39 / 32
	Heating (Hi / Lo)	dB(A)	36 / 30	37 / 30	38 / 31	38 / 31	39 / 32	39 / 32
Sound power level[1]	Cooling (Hi / Lo)	dB	51 / 45	52 / 45	53 / 46	53 / 46	54 / 47	54 / 47
	Heating (Hi / Lo)	dB	51 / 45	52 / 45	53 / 46	53 / 46	54 / 47	54 / 47
External static pressure[2]		Pa (mmAq)	0/29 (0/3)	0/29 (0/3)	0/29 (0/3)	0/29 (0/3)	0/29 (0/3)	0/29 (0/3)
Dimensions	H x W x D	mm	200 x 900 x 550	200 x 900 x 550	200 x 900 x 550	200 x 900 x 550	200 x 900 x 550	200 x 900 x 550
Net weight		kg)	21	21	22	22	22	22
Piping connection	Liquid pipe	mm (inch)	6,35 (1/4)	6,35 (1/4)	6,35 (1/4)	6,35 (1/4)	6,35 (1/4)	6,35 (1/4)
	Gas pipe	mm (inch)	12,7 (1/2)	12,7 (1/2)	12,7 (1/2)	12,7 (1/2)	12,7 (1/2)	12,7 (1/2)

Rating Conditions: Cooling Indoor 27°C DB / 19°C WB. Cooling Outdoor 35°C DB / 24°C WB. Heating Indoor 20°C DB. Heating Outdoor 7°C DB / 6°C WB.
DB: Dry Bulb; WB: Wet Bulb

1) These values are at 230 V only. For 220 V and 240 V specifications, please refer to the technical data book. 2) The external static pressure is set to 0pa at factory default setting.

Maximum flexibility VRF | Easy control by BMS CONNECTIVITY | Environmentally friendly refrigerant R410A

LOW-SILHOUETTE DUCT TYPE MID STATIC PRESSURE



Duct type with a maximum of 7mmaq of static pressure with slim profile of only 250mm.
Compact and powerful!

Technical focus
- Compact, Lightweight Design for Easy Installation
- 3-Way Removable Air Filter
- Versatile Air Inlet and Drain Installation
- Static Pressure Selection

Control flexibility
- 24-Hours ON/OFF Real Setting Timer
- Weekly Timer (Wired Only)
- Group Control by Single Remote Controller
- Outdoor Unit Silent Operation Mode
- Indoor Unit Thermistor Switching (Wired Only)
- Ventilation Unit Control (Wired Only)
- Digital Input/Output Contact - with CZ-TA31P (Optional)

Comfortability
- Filter Sign
- Hot Start Control
- Filter

Field service & maintenance
- Indoor Unit Address Setting
- Outdoor Unit Address Setting
- Automatic Address Resetting for Group Control (Wired Only)
- Indoor Unit Test Run Mode
- Emergency Operation (Infrared Only)
- Self Diagnosis Function
- Self Diagnosis Records (Wired Only)

* Wired: Wired Remote Controller / Infrared: Infrared Remote Controller.

3-Way Removable Air Filter
The air filter can be slide in-out in three directions even after duct installation for easier maintenance.

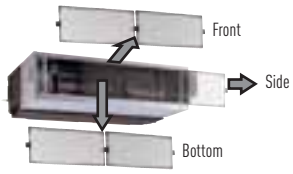



Air Outlet Plenum (without regulation adaptor)

45 & 56	3 x Ø 160	CZ-DUMPA45MAS3
63 , 71 & 90	4 x Ø 160	CZ-DUMPA63MAS4
100 & 125	5 x Ø 200	CZ-DUMPA100MAS5



Air Inlet Plenum

45 & 56	2 x Ø 200	CZ-DUMPA45MAR2
63 , 71 & 90	2 x Ø 250	CZ-DUMPA63MAR2
100 & 125	4 x Ø 200	CZ-DUMPA100MAR4



Optional Controller
Wired Remote Controller
CZ-RT1



Optional Controller
Wireless Remote Controller
CZ-RWS1 (Heat Pump Models)
CZ-RWC1 (Cooling Only Models)

			1,75 HP	2,0 HP	2,5 HP	3,0 HP	3,5 HP	4,0 HP
Indoor			**S-45MA1E5**	**S-56MA1E5**	**S-63MA1E5**	**S-71MA1E5**	**S-90MA1E5**	**S-100MA1E5**
Power source			220-230-240 V / Single Phase / 50 Hz					
Cooling capacity		kW	4,50	5,60	6,30	7,10	9,00	10,00
Current[1]		A	0,60	0,60	0,60	0,60	0,80	1,35
Power input cooling[1]		W	135	135	135	135	175	300
Heating capacity		kW	5,10	6,40	7,10	8,00	10,00	11,20
Current[1]		A	0,60	0,60	0,60	0,60	0,80	1,35
Power input heating[1]		W	135	135	135	135	175	300
Air volume	Cooling	m³/min	15	15	17	17	19	34
	Heating	m³/min	15	15	17	17	19	34
Moisture removal volume		L/h	2,5	3,2	3,6	4,2	5,4	6,0
Sound pressure level[1]	Cooling (Hi / Lo)	dB(A)	42/35	42/35	43/36	43/36	44/37	47/43
	Heating (Hi / Lo)	dB(A)	42/35	42/35	43/36	43/36	44/37	47/43
Sound power level[1]	Cooling (Hi / Lo)	dB	57/50	57/50	58/51	58/51	59/52	62/58
	Heating (Hi / Lo)	dB	57/50	57/50	58/51	58/51	59/52	62/58
External static pressure[2]		Pa (mmAq)	49/69 (5/7)	49/69 (5/7)	49/69 (5/7)	49/69 (5/7)	49/69 (5/7)	49/69 (5/7)
Dimensions[3]	H x W x D	mm	250 x 780 x 650	250 x 780 x 650	250 x 1.000 x 650	250 x 1.000 x 650	250 x 1.000 x 650	250 x 1.200 x 650
Net weight		kg	28	28	32	32	32	41
Piping connection	Liquid pipe	mm (inch)	6,35 (1/4)	6,35 (1/4)	6,35 (1/4)	9,52 (3/8)	9,52 (3/8)	9,52 (3/8)
	Gas pipe	mm (inch)	12,7 (1/2)	12,7 (1/2)	12,7 (1/2)	15,88 (5/8)	15,88 (5/8)	15,88 (5/8)

Rating Conditions: Cooling Indoor 27°C DB / 19°C WB. Cooling Outdoor 35°C DB / 24°C WB. Heating Indoor 20°C DB. Heating Outdoor 7°C DB / 6°C WB.
DB: Dry Bulb; WB: Wet Bulb

1) These values are at 230 V only. For 220 V and 240 V specifications, please refer to the technical data book. 2) The external static pressure is set to 49 Pa at factory default setting. 3) Add 100mm for piping port.

Maximum flexibility — VRF
Easy control by BMS — CONNECTIVITY
Environmentally friendly refrigerant — R410A

Dimensions

Wall Mounted Type

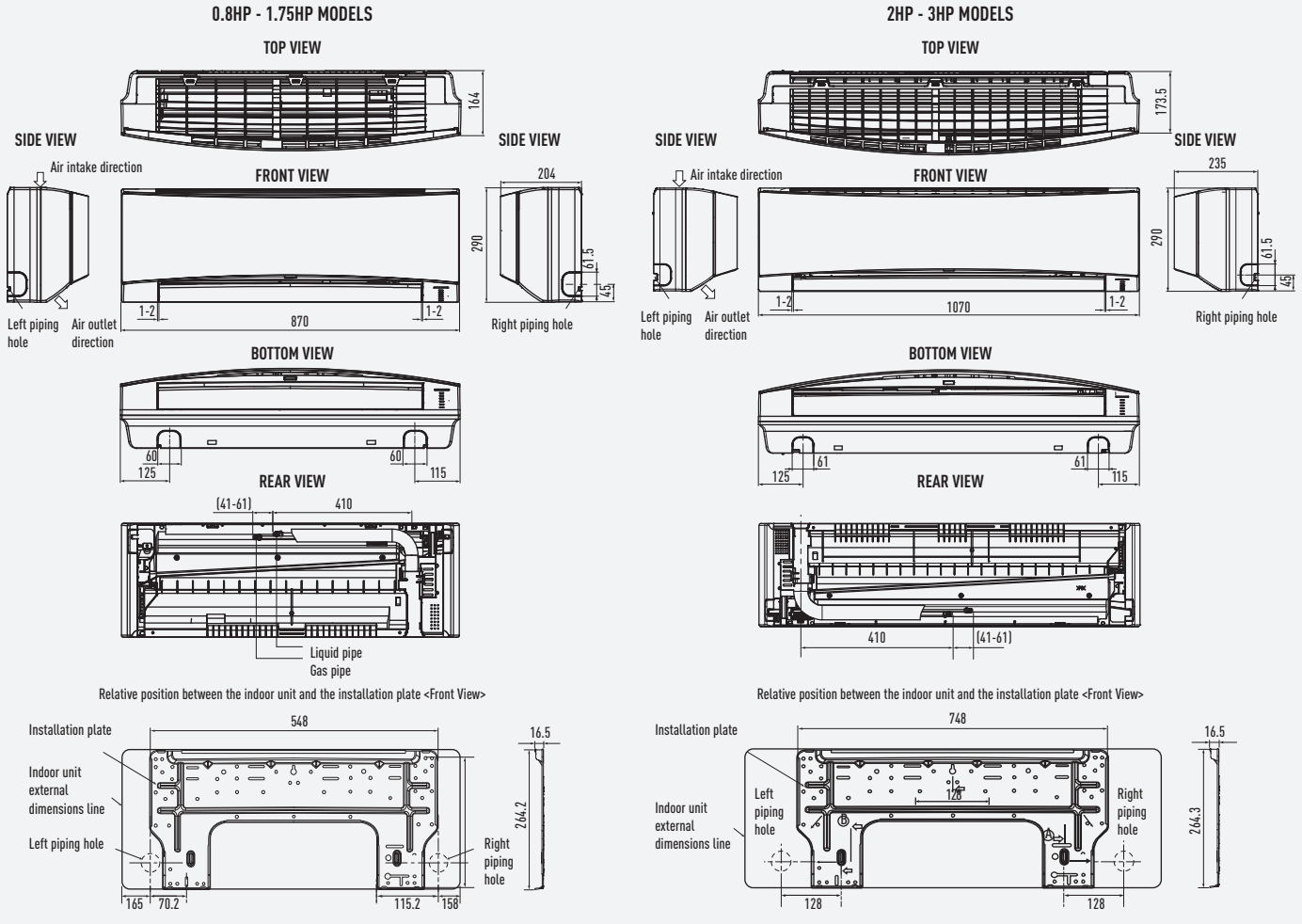

4 Way 60x60 Cassette

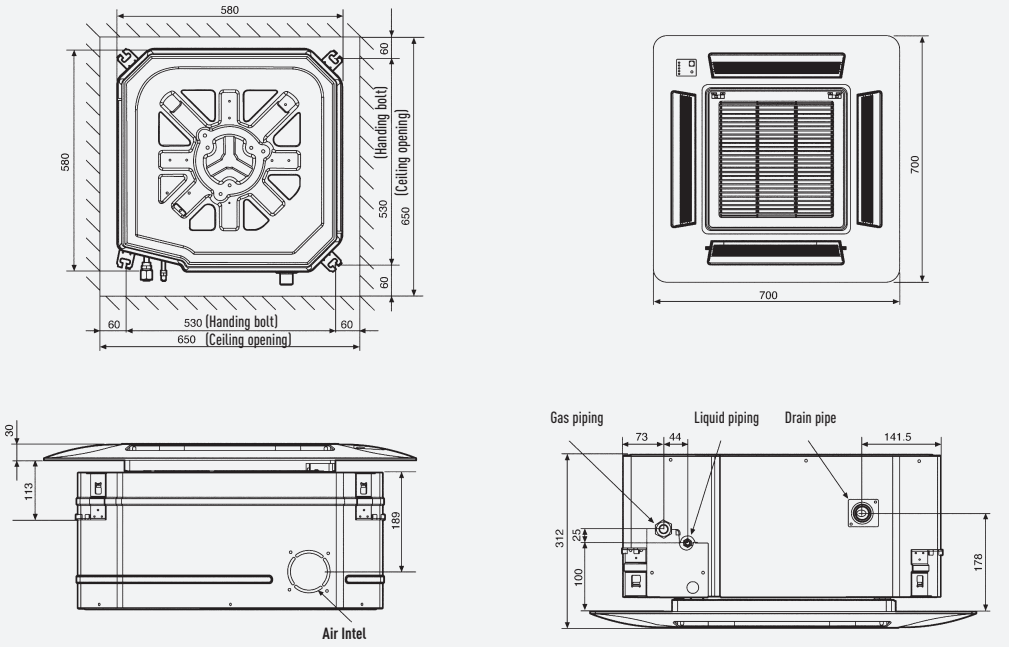

4 Way 90x90 Cassette

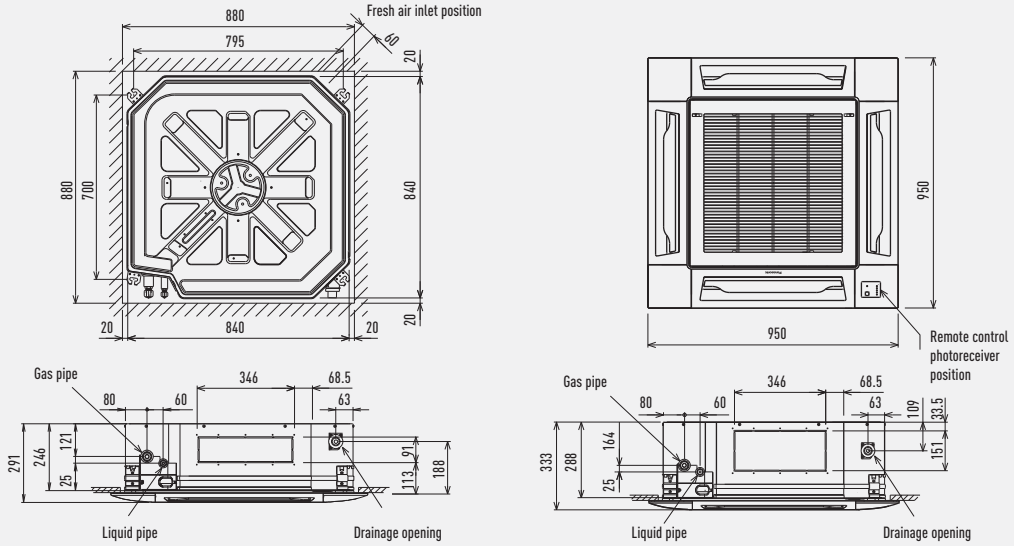

SPACE NEEDED FOR INSTALLATION

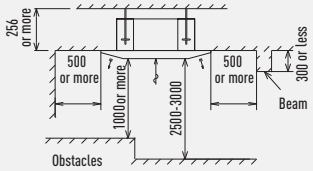

DRAINAGE

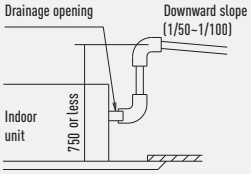

Low-Silhouette Duct Type Low Static Pressure

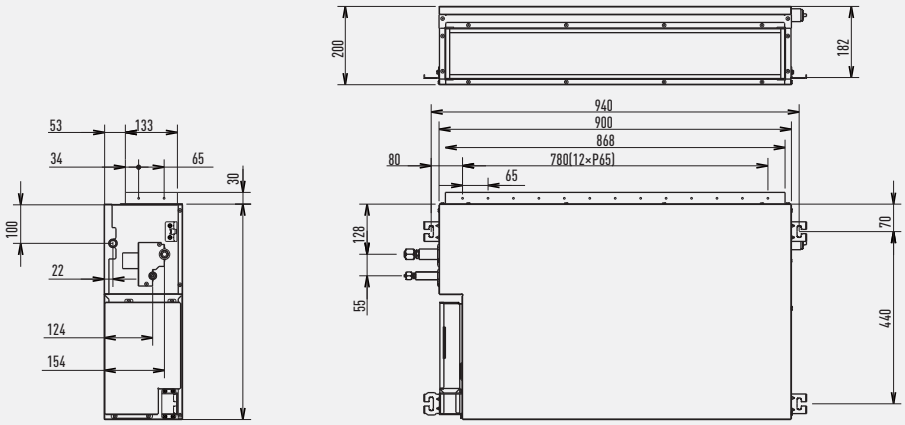

SPACE NEEDED FOR INSTALLATION

TOP VIEW

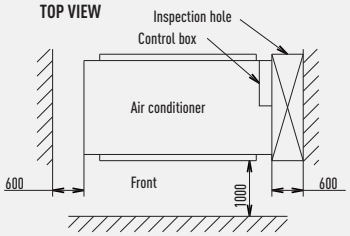

FRONT VIEW

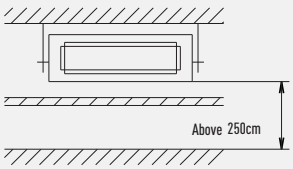

Low-Silhouette Duct Type Mid Static Pressure

SPACE NEEDED FOR INSTALLATION

TOP VIEW

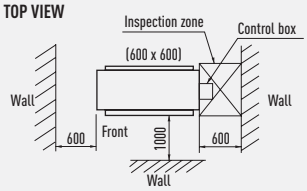

FRONT VIEW

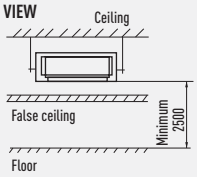

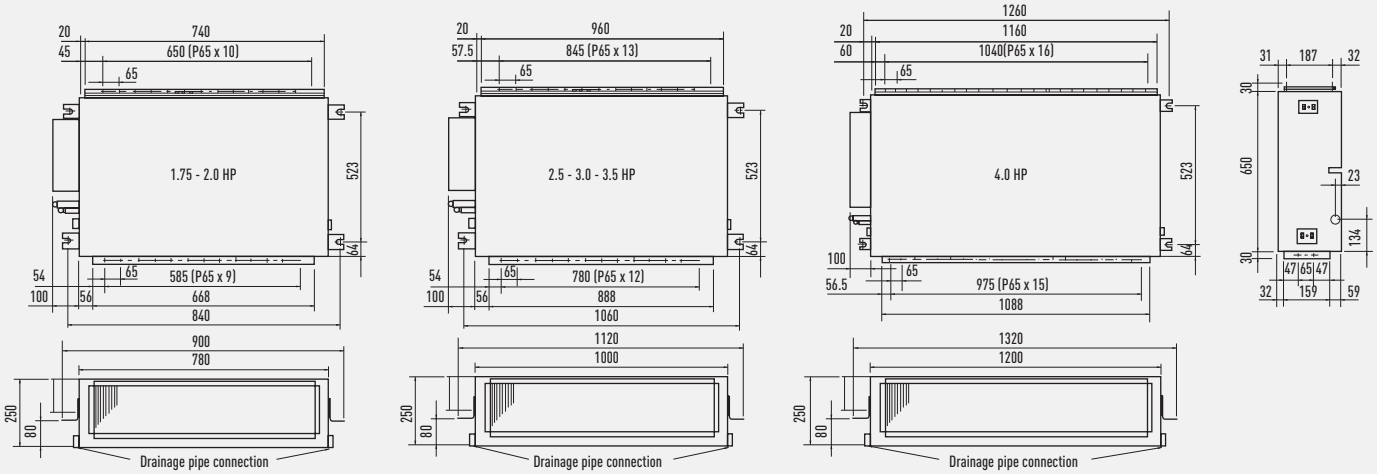

Panasonic

www.aircon.panasonic.eu

heatingandcoolingsystems

Due to the ongoing innovation of our products, the specifications of this catalogue are valid barring typographic errors, and may be subject to minor modifications by the manufacturer without prior warning in order to improve the product. The total or partial reproduction of this catalogue is prohibited without the express authorisation of Panasonic UK Ltd.

www.eggassociats.net

UK / Ireland
Panasonic House
Panasonic Heating & Cooling Systems
Willoughby Road
Bracknell, Berkshire
RG12 8FP

01344 85 3182
uk-aircon@eu.panasonic.com
www.aircon.panasonic.eu

France
Panasonic France
Division Chauffage et Climatisation
1 à 7 Rue du 19 Mars 1962
92238, Gennevilliers Cedex

0 892 183 184 (0.34 €/min)
www.aircon.panasonic.eu

Germany / Austria / Switzerland
Panasonic Deutschland
Hagenauer Str. 43
65203 Wiesbaden

0611 / 235 - 191
klimaanlagen@eu.panasonic.com
heizung@eu.panasonic.com
www.aircon.panasonic.eu

Turkey
Panasonic Elektronik Satis A.S.
Maslak Mah. Bilim Sok. Sun Plaza No: 5
Kat:16 Sisli
34398, Istanbul

444 72 62
contact.ptr@eu.panasonic.com
www.aircon.panasonic.eu

Czech Republic / Slovakia
Panasonic Marketing Europe GmbH, organizační složka Česká republika
Palac Karlin, Thamova 289/13
186 00 Prague 8, Czech Republic

+420 236 032 511
panasonic.praha@eu.panasonic.com
www.aircon.panasonic.eu

Spain / Portugal
Panasonic España
WTC Almeda Park, Plaza de la Pau s/n,
Edificio 8, Planta baja
8940, Cornellá de Llobregat / Barcelona

902 15 30 60
www.aircon.panasonic.eu

Italy / Malta
Panasonic Italia
Viale dell'Innovazione, 3
20126, Milano

02-67072556
www.aircon.panasonic.eu

Sweden
Panasonic Nordic
Box 6060
141 06, Kungens Kurva

+46 8 680 26 00
www.aircon.panasonic.eu

Poland
Panasonic Marketing Europe GmbH
Oddział w Polsce Sp. z o.o.
Wołoska 9A
02-583, Warszawa

+48 801 801 887
AirCon_Warsaw@eu.panasonic.com
www.aircon.panasonic.eu

Netherlands / Belgium / Luxemburg
Panasonic Benelux
Europalaan 30
5332 BC, 's-Hertogenbosch

+31 76 6402 538
airconditioning.nl@eu.panasonic.com
www.aircon.panasonic.eu

Do not add or replace refrigerant other than the specified type. Manufacturer is not responsible for the damage and deterioration in safety due to usage of the other refrigerant.

Panasonic®

To find out how Panasonic cares for you, log on to: www.aircon.panasonic.eu

Panasonic Marketing Europe GmbH
Panasonic Air Conditioning
Hagenauer Strasse 43, 65203 Wiesbaden, Germany